PATTERNS BY mood FABRICS

MDF561

#MoodPetalumaPattern

"The Petaluma Pleated Trousers"

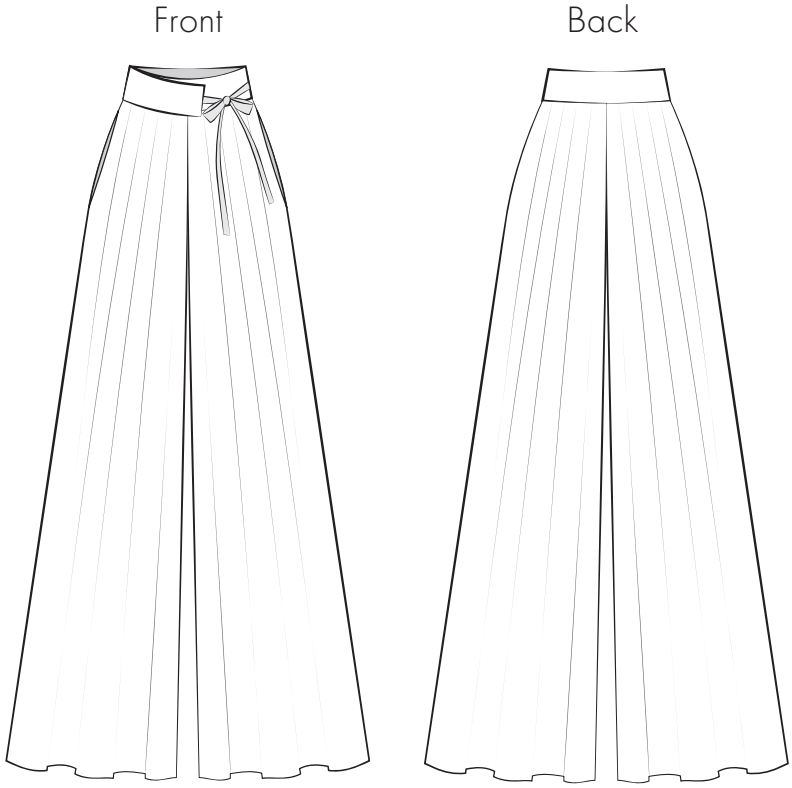

STOP!

Print only this page first to check accuracy. The Mood square above should measure 2 inches. Print "actual size" in "portrait" mode (not auto center). Formatted for both US Letter & A4 paper sizes.

Formatted for both US Letter & A4 Paper

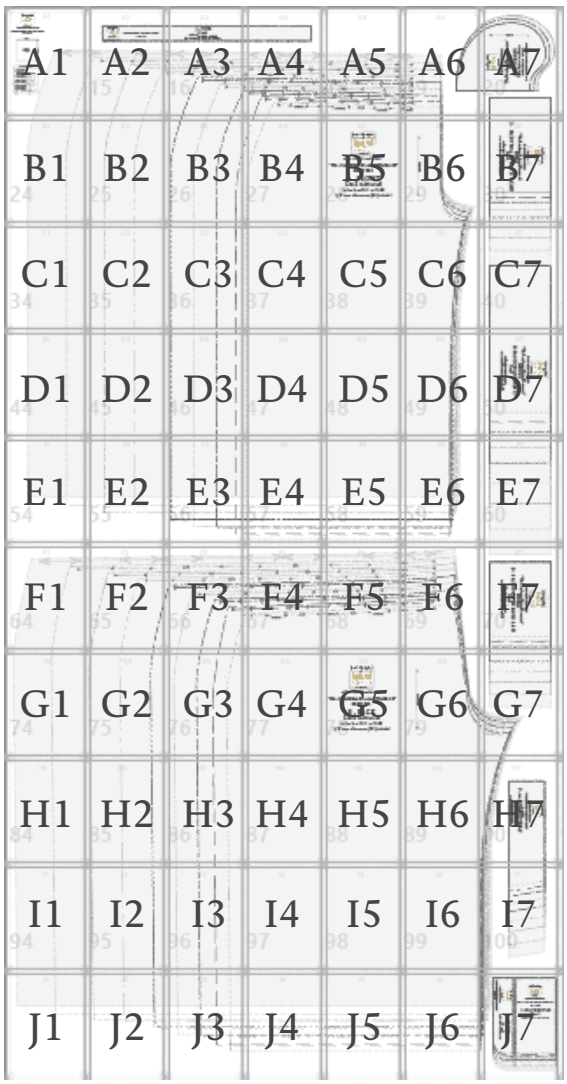

Trimless Option:
This is the fastest! No trimming needed! Place left-side margins over right-side margins, overlapping dashed lines and dots. In the same fashion, top margins will overlap bottom margins. Slight unprinted gaps are normal for this method.

Trimmed Option:
This removes any unprinted gaps. Trim along the top and right margins at the dashed lines. Overlap the trimmed margins to the untrimmed margins, matching dashed lines and dots.

Tip! Build rows first, then join the rows together as you go.

©2026 MoodFabrics.com / MoodSewciety.com
Mass production, resale, or distribution of this pattern in any form is strictly prohibited.

mood SEWCIETY

PATTERNS BY mood FABRICS MDF561

#MoodPetalumaPattern

MDF561 - "The Petaluma Pleated Trousers"

Ladies Sizes 00-0 to 30-32

BODY MEASUREMENTS IN INCHES (Chart 1)

SIZE	00-0	2-4	6-8	10-12	14-16	18-20	22-24	26-28	30-32
WAIST	24	26	28	31	34	38	42	47	52
HIPS	35	37	39	42	45	49	53	58	63

APPROXIMATE FINISHED GARMENT MEASUREMENTS - IN INCHES (Chart 2)

SIZE	00-0	2-4	6-8	10-12	14-16	18-20	22-24	26-28	30-32
WAIST	26	28	30	33	36	40	44	49	54
HIPS*	37	39	41	44	47	51	55	60	65
LENGTH	42	42	42	42.5	42.5	42.5	43	43	43

*Approximate finished hip measurement after pleating.
The exact extended hip measurement is the measurement of the pattern pieces at hip level for the size you select, with the pleats fully extended.

***Size guide is based on the suggested design & wearing ease for this style. You can also choose the size according to your desired finished garment measurements, blending between sizes as needed. Measure the printed patterns to make sure the dimensions are according to the desired fitting and adjust if needed before cutting the fabric. For best results sew a test garment in a similar fabric to adjust your pattern.**

Recommended Fabric: Cotton, Tencel and Linen Blended Woven - Heathered Cinnamon - Toledo Collection

We love creating these free patterns for the community and we want to keep them free! In return, we hope you check out MoodFabrics.com for your next project!

Want to use one of our patterns to make a garment to sell? Our patterns are royalty-free! We just ask that you credit us with:
MoodSewciety.com
or
MoodFabrics.com
in your product description.

FOR SEWING INSTRUCTIONS AND MORE INFORMATION:
Scan the QR code or visit MoodSewciety.com and search "MDF561"

1/2" seam allowances (SA's) included unless stated otherwise.

REMEMBER TO SHARE YOUR MADE WITH MOOD LOOK!

Tag us and use:
#MoodPetalumaPattern
for a shot at being featured on our social media

@mood.fabrics
@moodfabrics
@Mood_Fabrics
@moodfabrics
@moodfabrics

The Mood Sewciety Team

©2026 MoodFabrics.com / MoodSewciety.com
Mass production, resale, or distribution of this pattern in any form is strictly prohibited.

mood SEWCIETY

PATTERNS BY mood FABRICS
MDF561

"The Petaluma Pleated Trousers"

PATTERN PIECES

A	**BACK** FABRIC - CUT 2 MIRRORED
B	**FRONT** FABRIC - CUT 2 MIRRORED
C	**FRONT WAISTBAND RIGHT** FABRIC - CUT 1
D	**FRONT WAISTBAND LEFT** FABRIC - CUT 1
E	**BACK WAISTBAND** FABRIC - CUT 1
F	**WAISTBAND OVERLAY** FABRIC - CUT 2 MIRRORED
G	**POCKETS** FABRIC - CUT 2 MIRRORED SETS
H	**FLY** FABRIC - CUT 2
I	**FLY SHIELD** FABRIC - CUT 1
J	**TIES** FABRIC - CUT 2

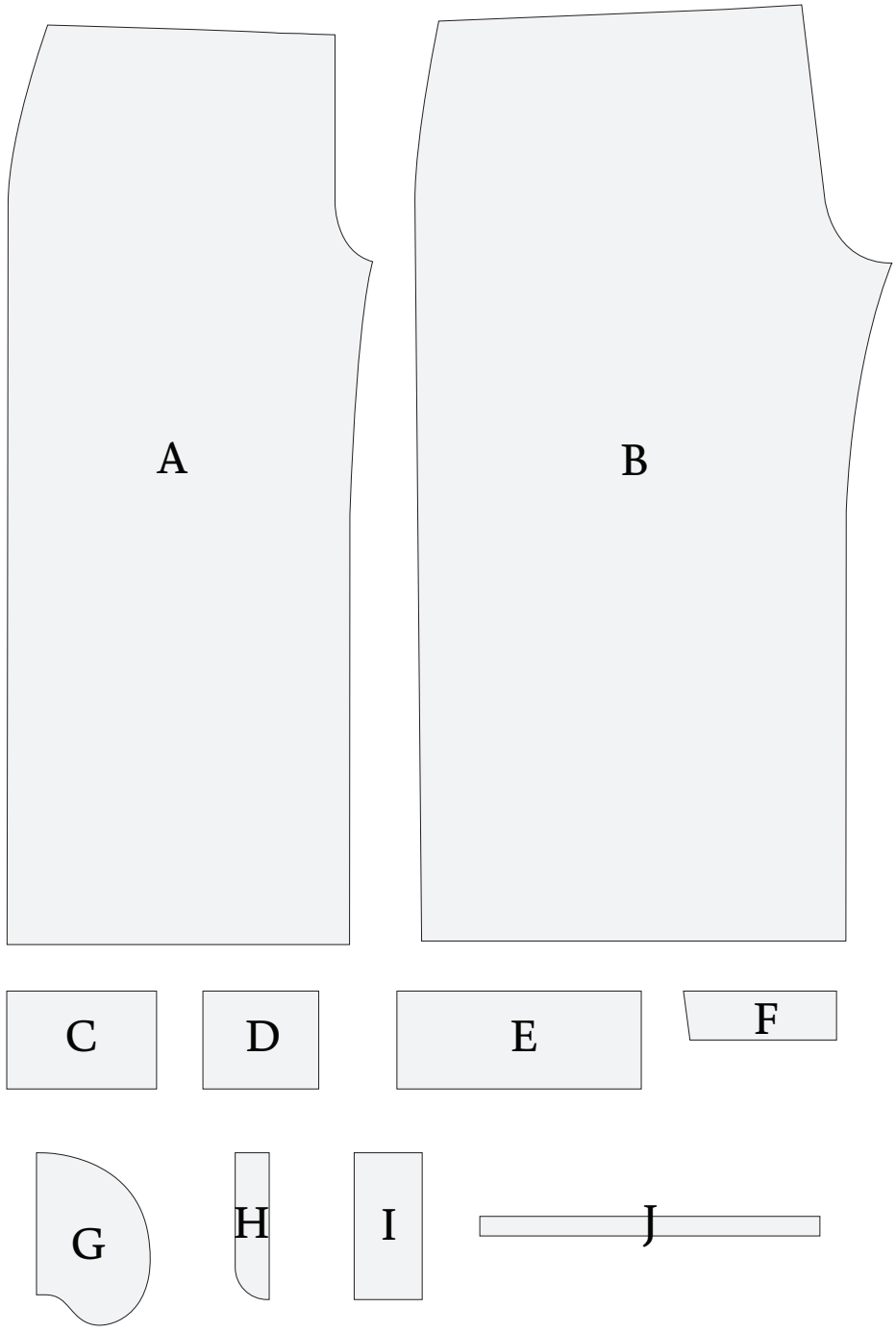

All sizes include the same number of pleats. The pleats increase in width as the size increases. For larger sizes, you may choose to add more pleats with a narrower width if desired.
After pleating, make sure the finished waist measurement of the pants is 2" less than the waistband length.

©2026 MoodFabrics.com / MoodSewciety.com
Mass production, resale, or distribution of this pattern in any form is strictly prohibited.
mood SEWCIETY

PATTERNS BY mood FABRICS MDF561

#MoodPetalumaPattern

"The Petaluma Pleated Trousers" MDF561

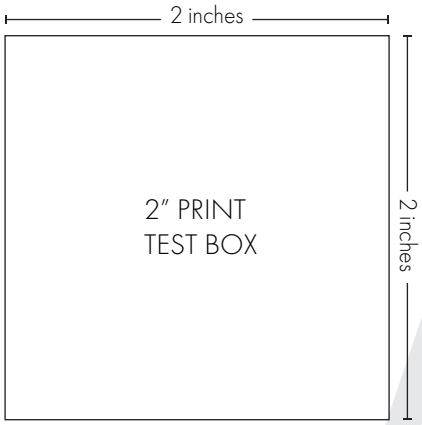

Size Line Key
SIZE 00-0
SIZE 2-4
SIZE 6-8
SIZE 10-12
SIZE 14-16
SIZE 18-20
SIZE 22-24
SIZE 26-28
SIZE 30-32

A1

PATTERNS BY mood FABRICS MDF561

“The Petaluma Pleated Trousers” MDF561

#MoodPetalumaPattern

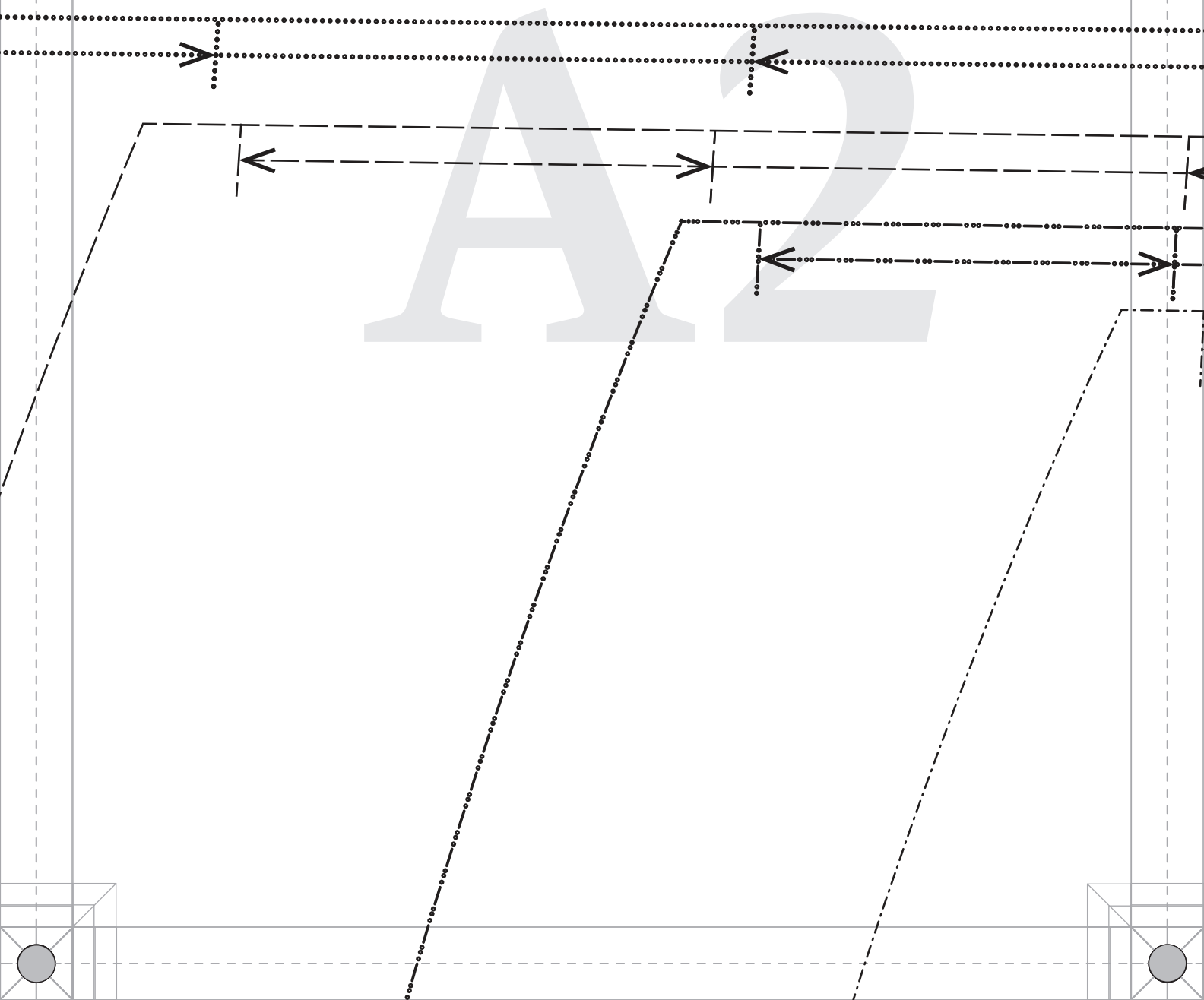

J -TIES
Cut 2

Ladies Sizes 00-0 to 30-32
1/4" seam allowances (SA's) included

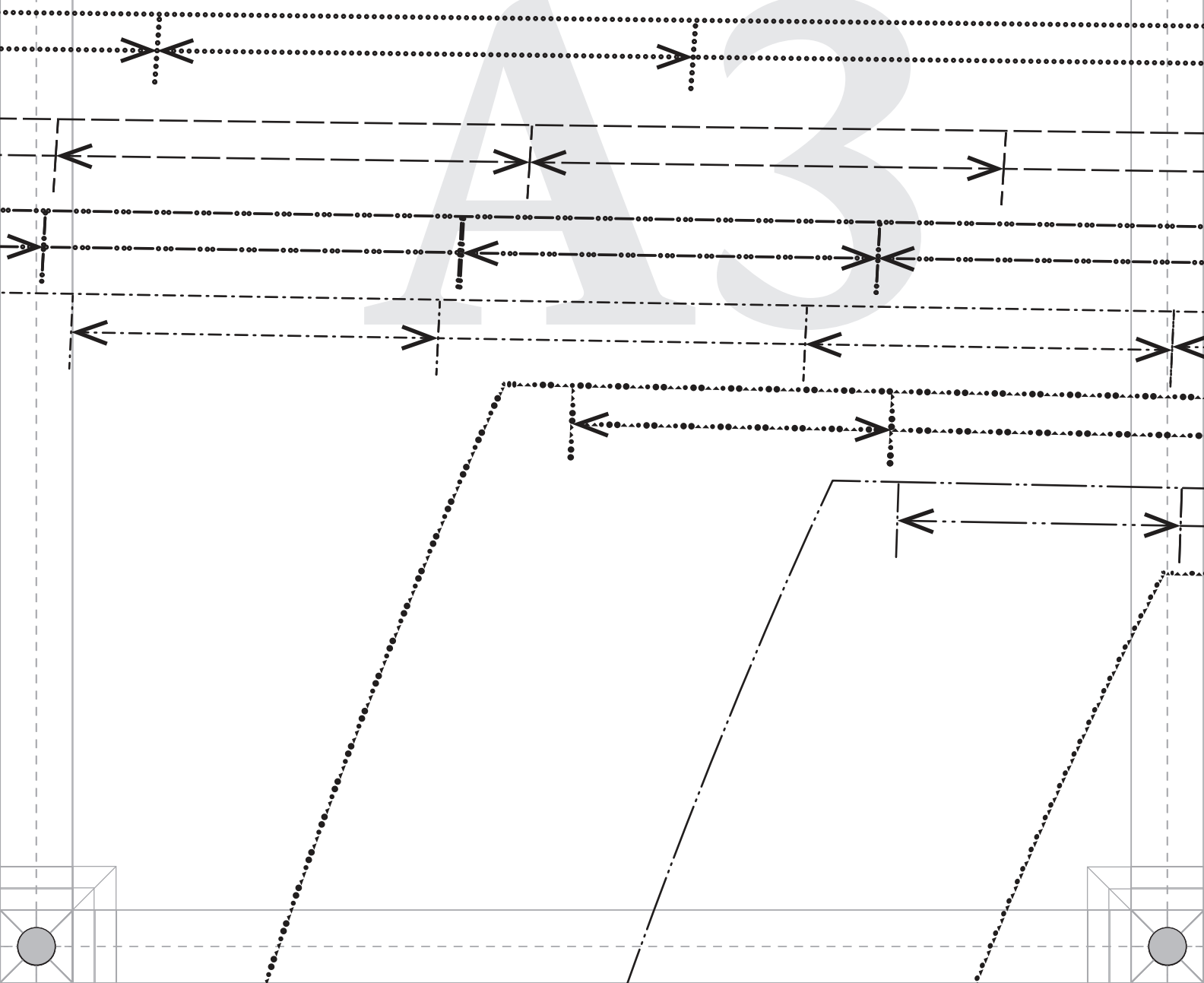

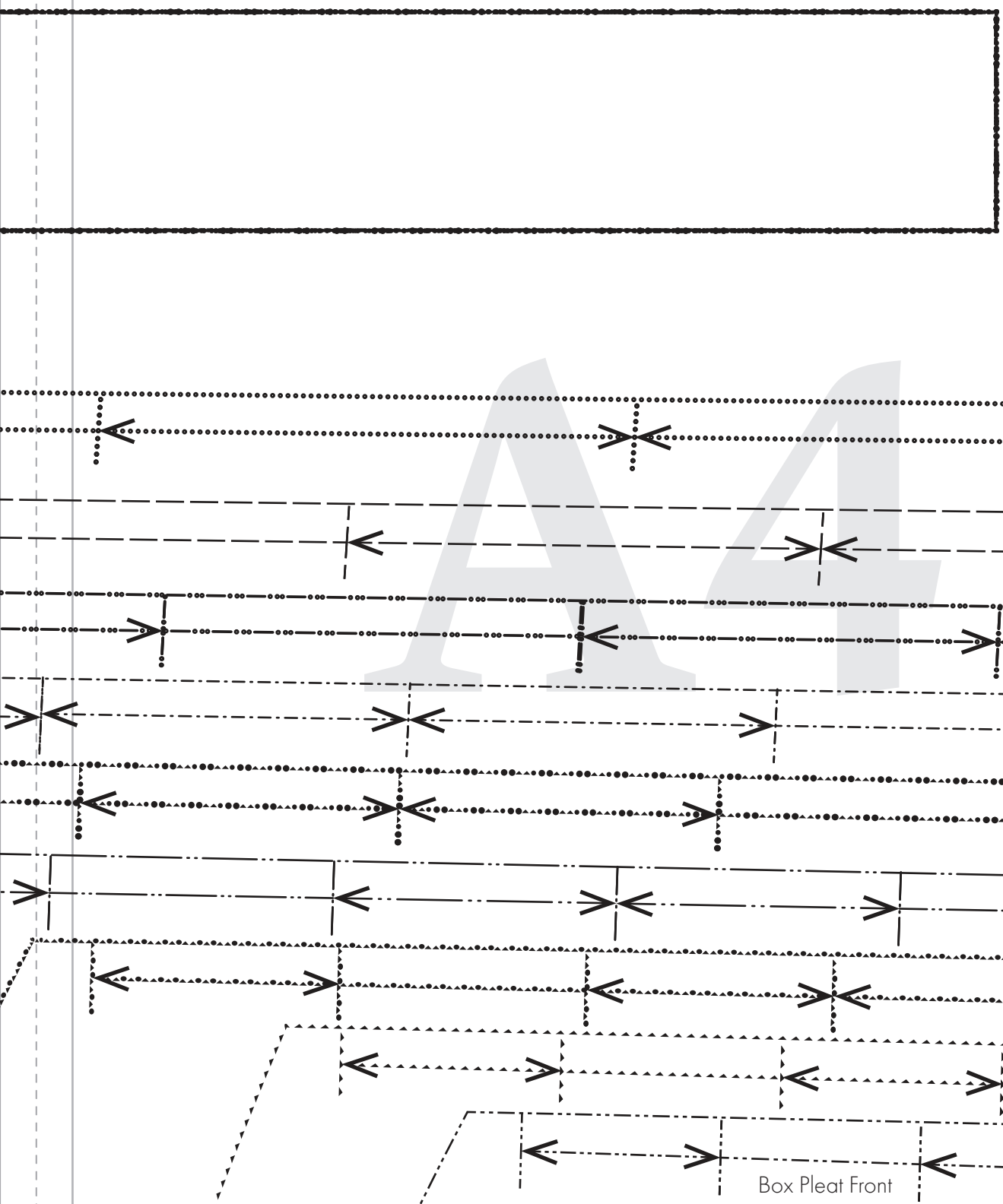
Box Pleat Front

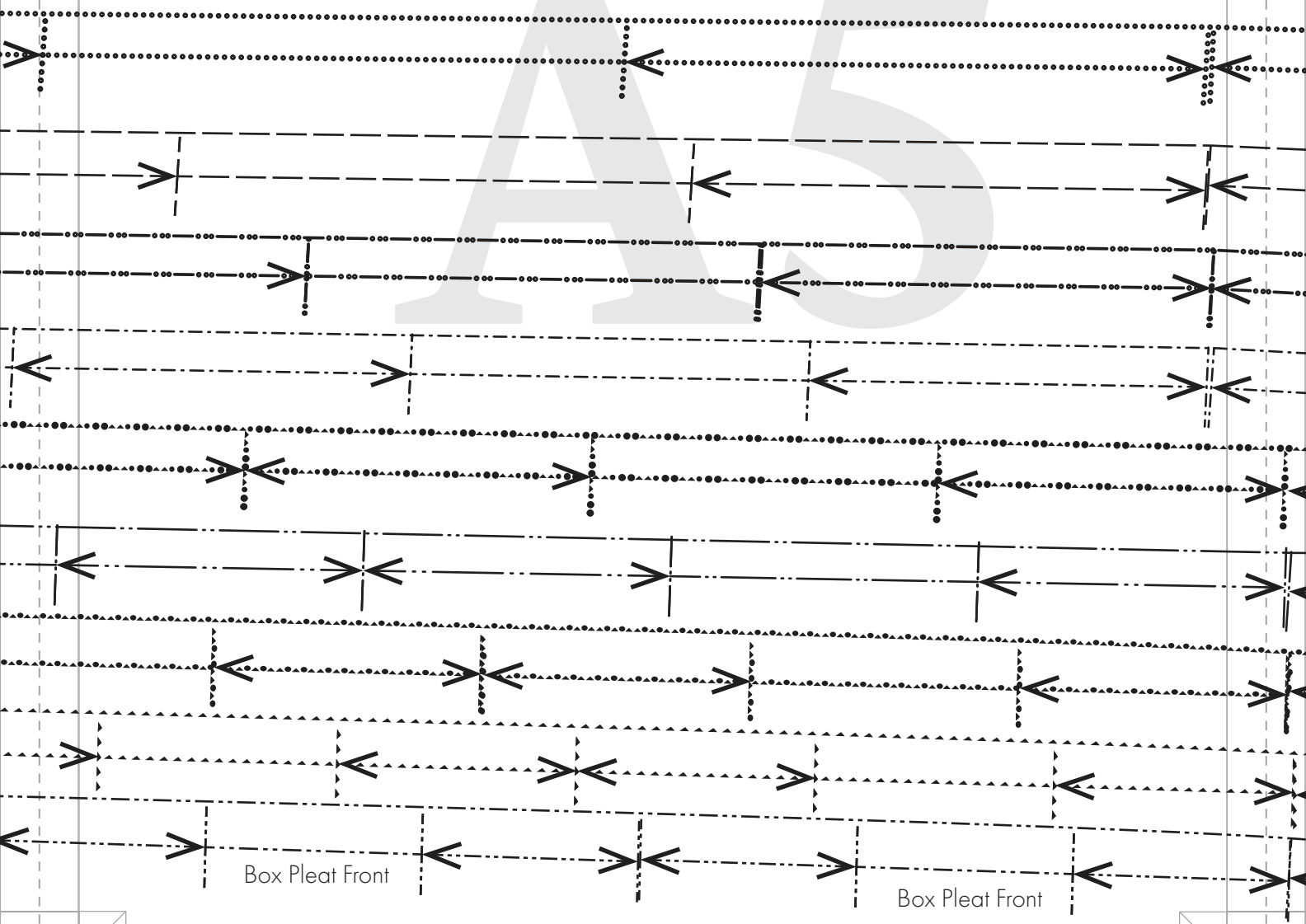
Box Pleat Front
Box Pleat Front

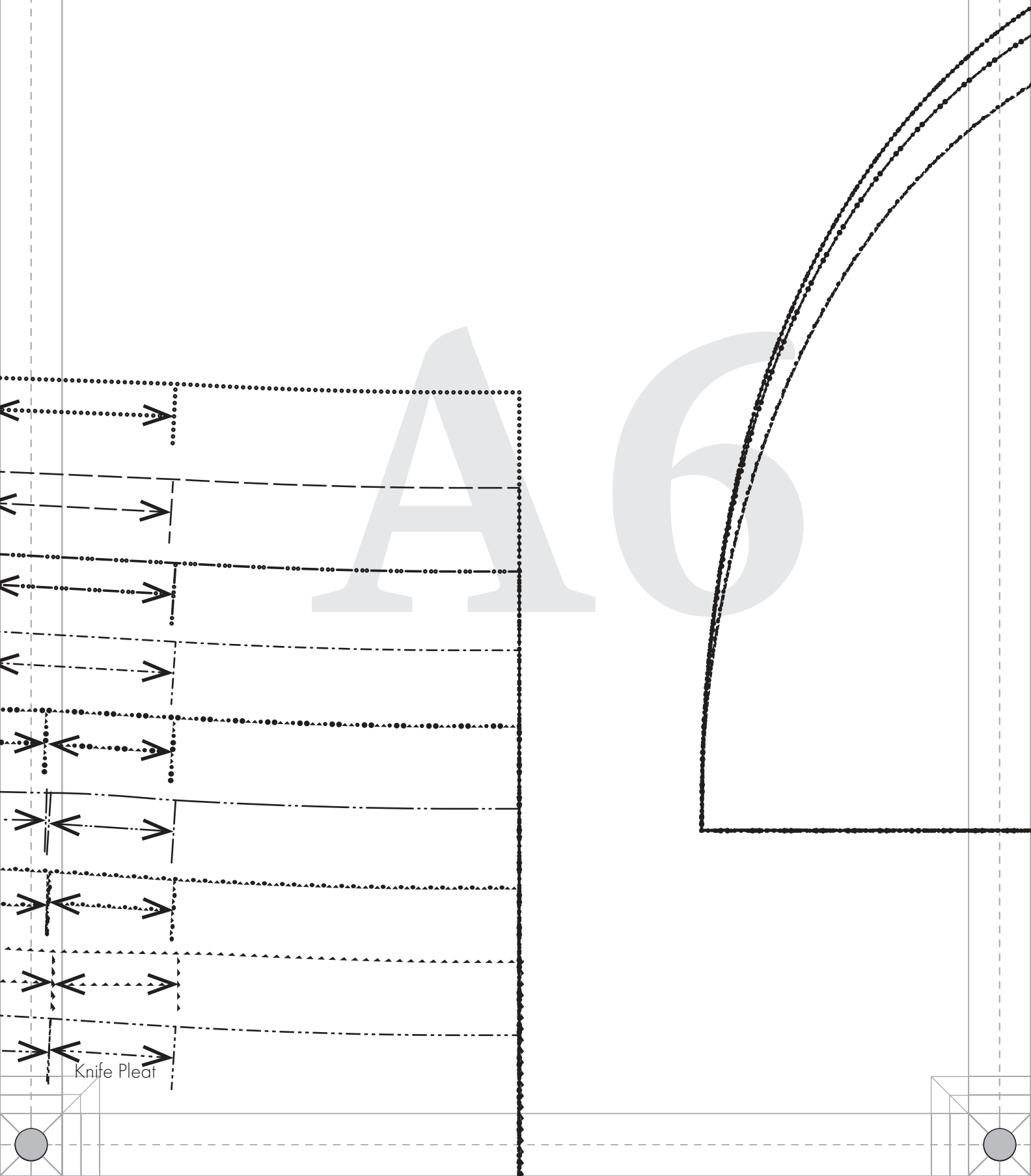
A6
Knife Pleat

PATTERNS BY mood FABRICS MDF561

#MoodPetalumaPattern

"The Petaluma Pleated Trousers" MDF561

G - POCKETS

Cut 2 mirrored sets

Ladies Sizes 00-0 to 30-32

1/2" seam allowances (SA's) included

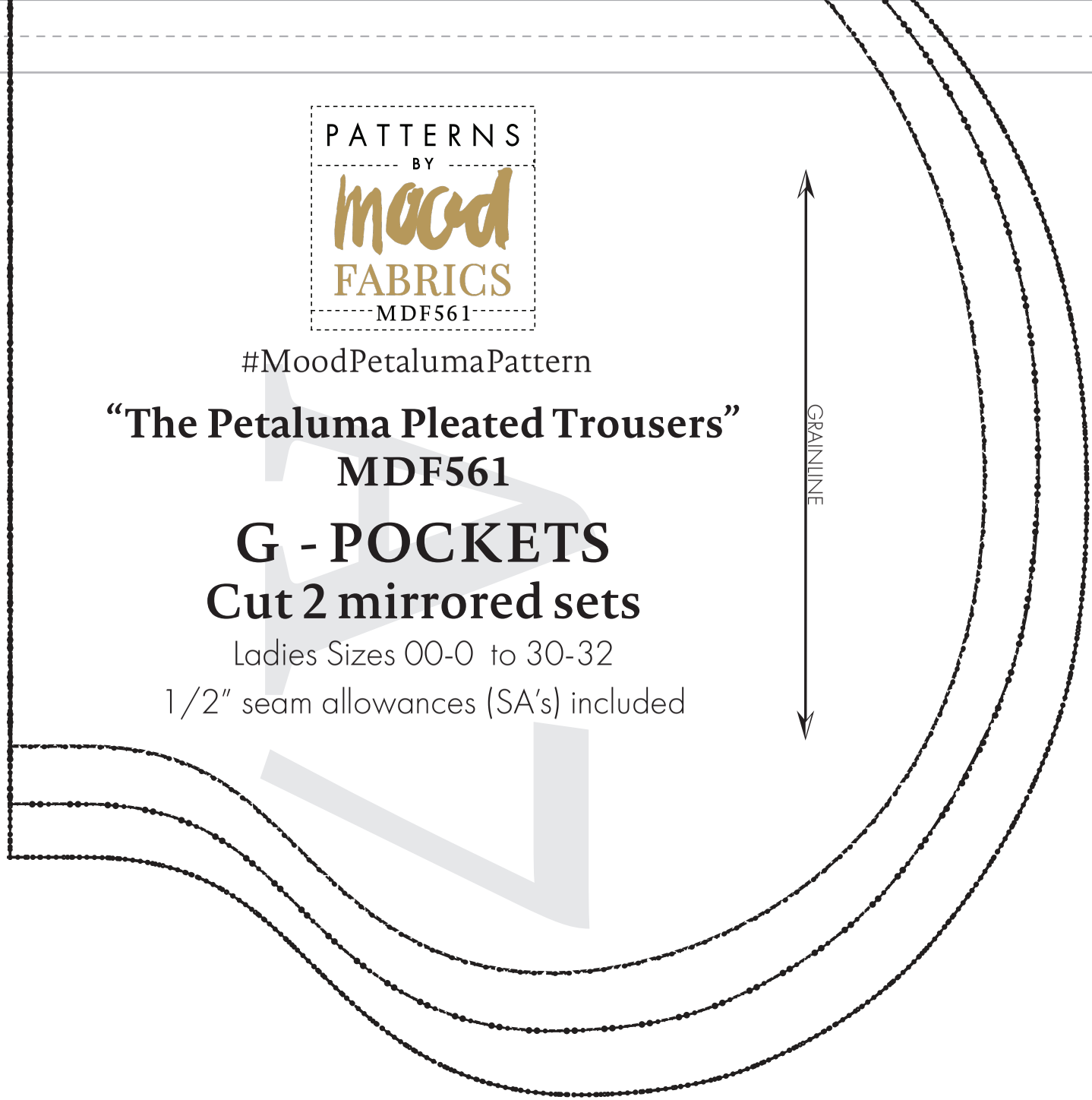

B1

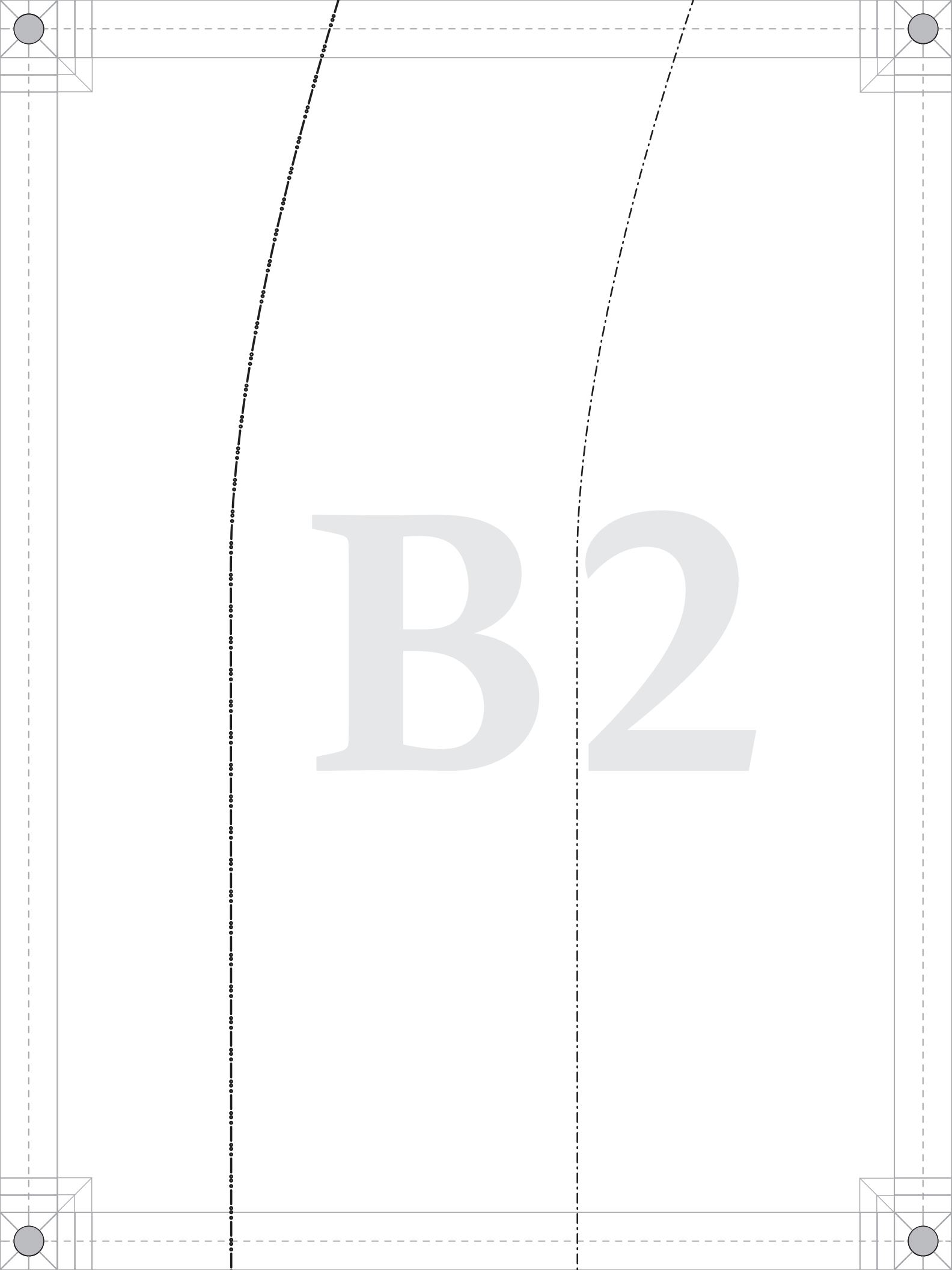
B2

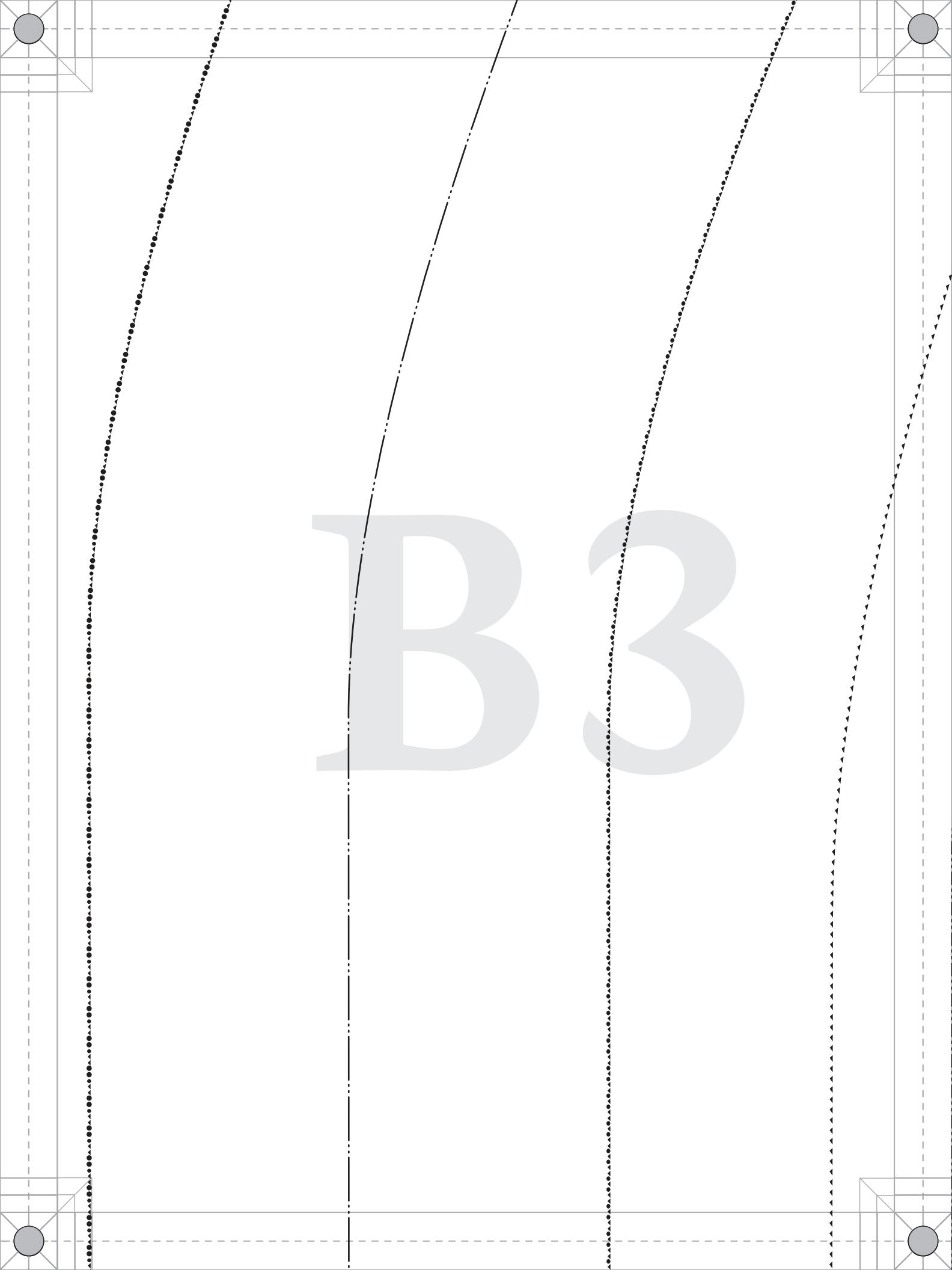
B3

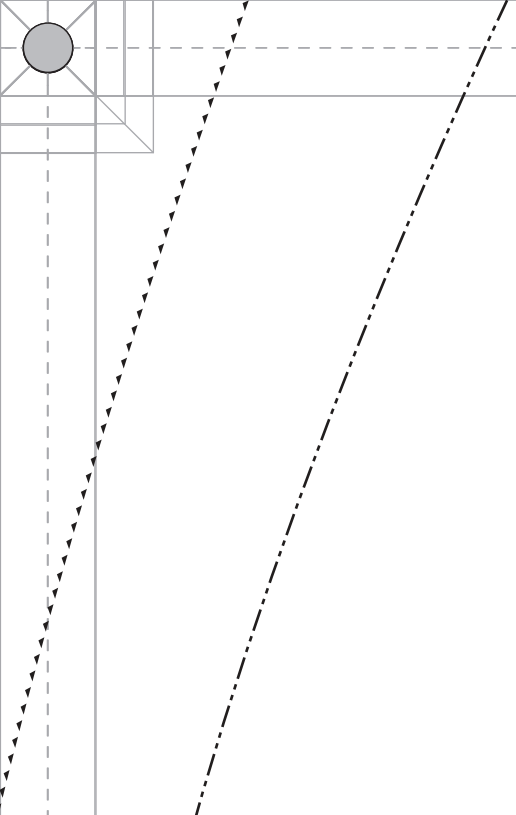

B4

PATTERNS BY mood FABRICS MDF561

#MoodPetalumaPattern

"The Petaluma Pleated Trousers" MDF561

A - FRONT

Cut 2 mirrored

Ladies Sizes 00-0 to 30-32

1/2" seam allowances (SA's) included

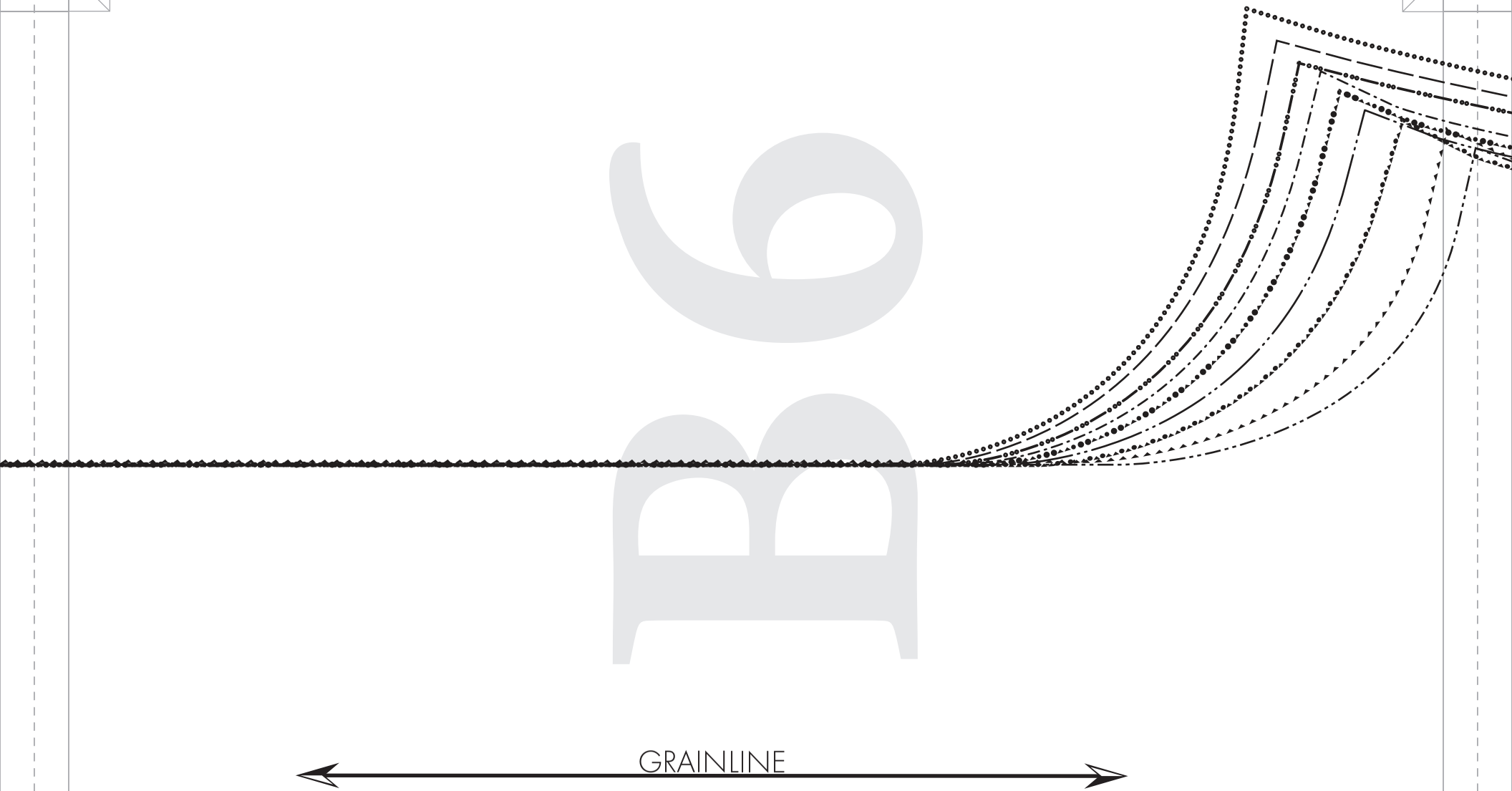
B6
GRAINLINE

PATTERNS BY mood FABRICS MDF561

#MoodPetalumaPattern

"The Petaluma Pleated Trousers"
MDF561

C - FRONT WAISTBAND RIGHT

Cut 1

Ladies Sizes 00-0 to 30-32

1/2" seam allowances (SA's) included

C1

C2

C3

C4

C5

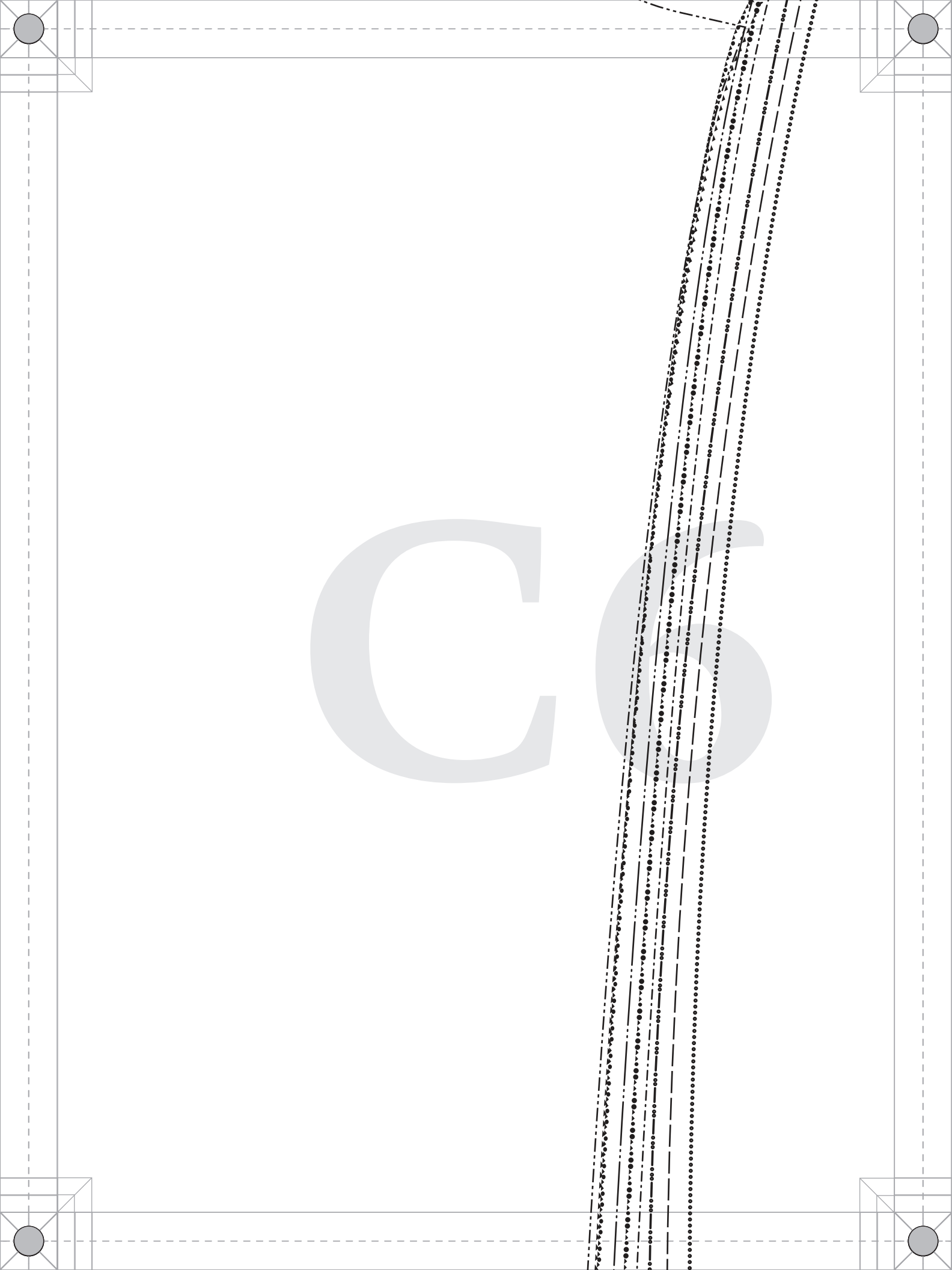

C7
mood
FABRICS

D1

D2

D3


D4

D5

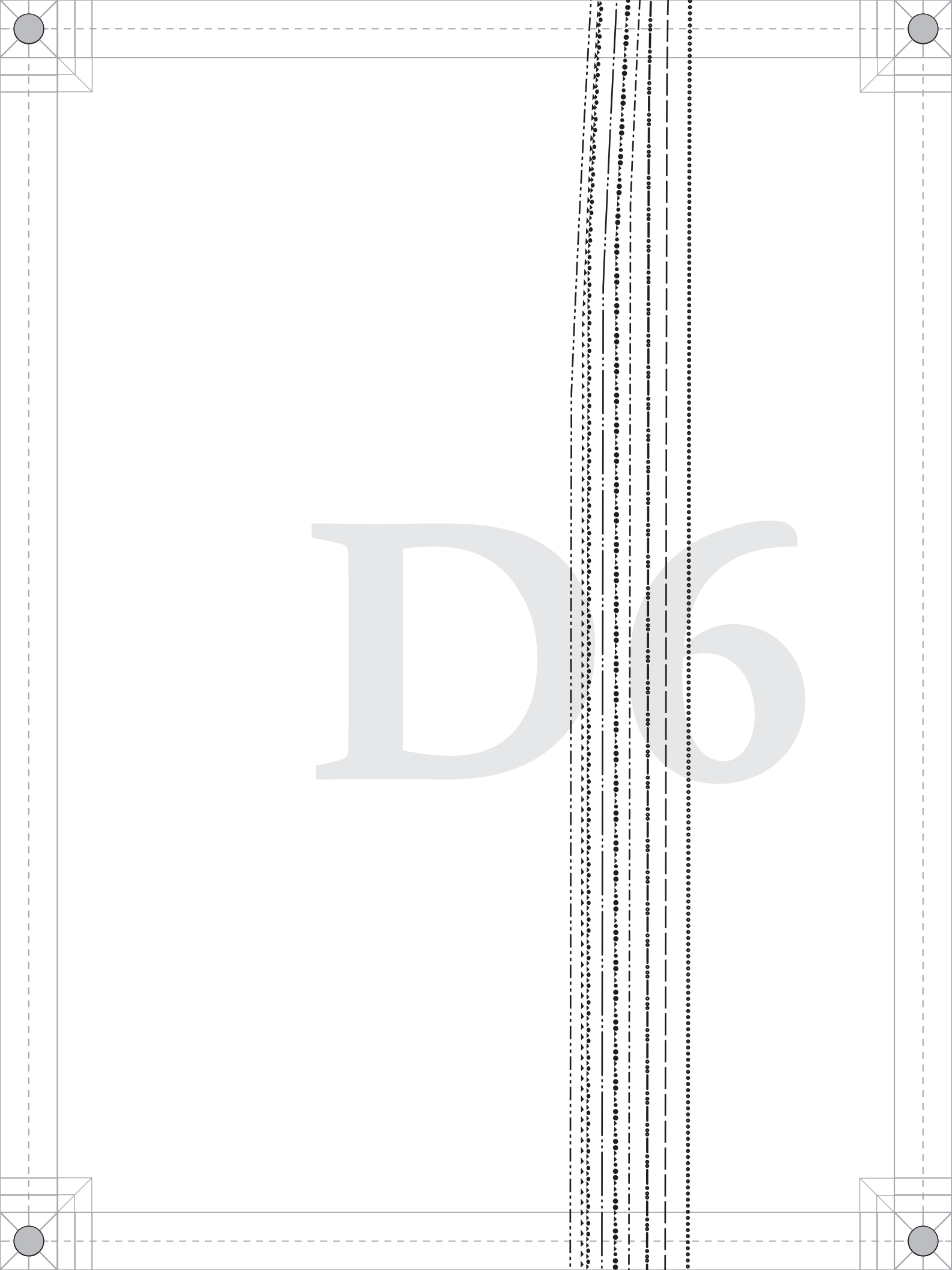
D6

PATTERNS BY mood FABRICS MDF561

#MoodPetalumaPattern

"The Petaluma Pleated Trousers" MDF561

E - BACK WAISTBAND

Cut 1

Ladies Sizes 00-0 to 30-32

1/2" seam allowances (SA's) included

E1

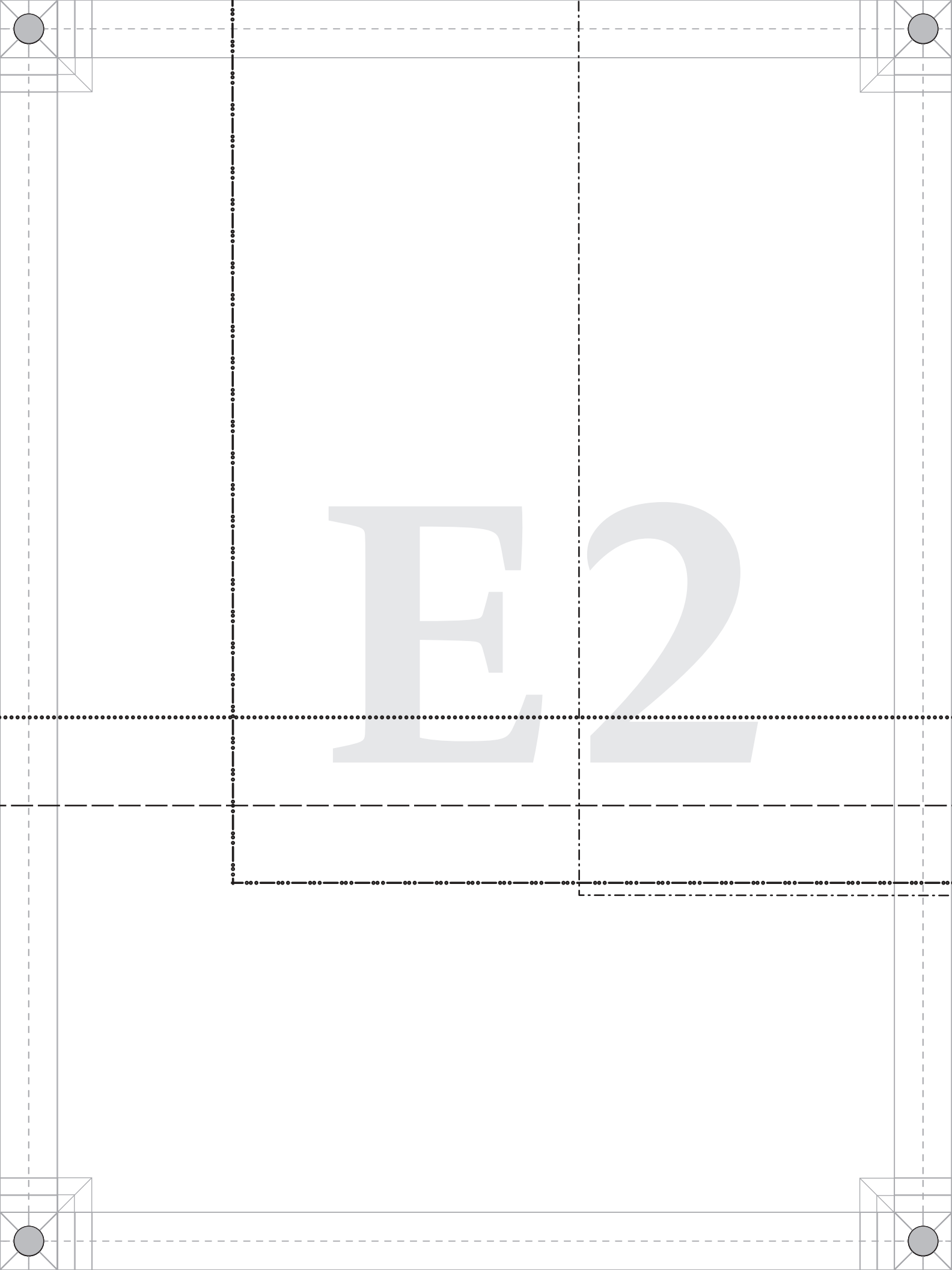

E2

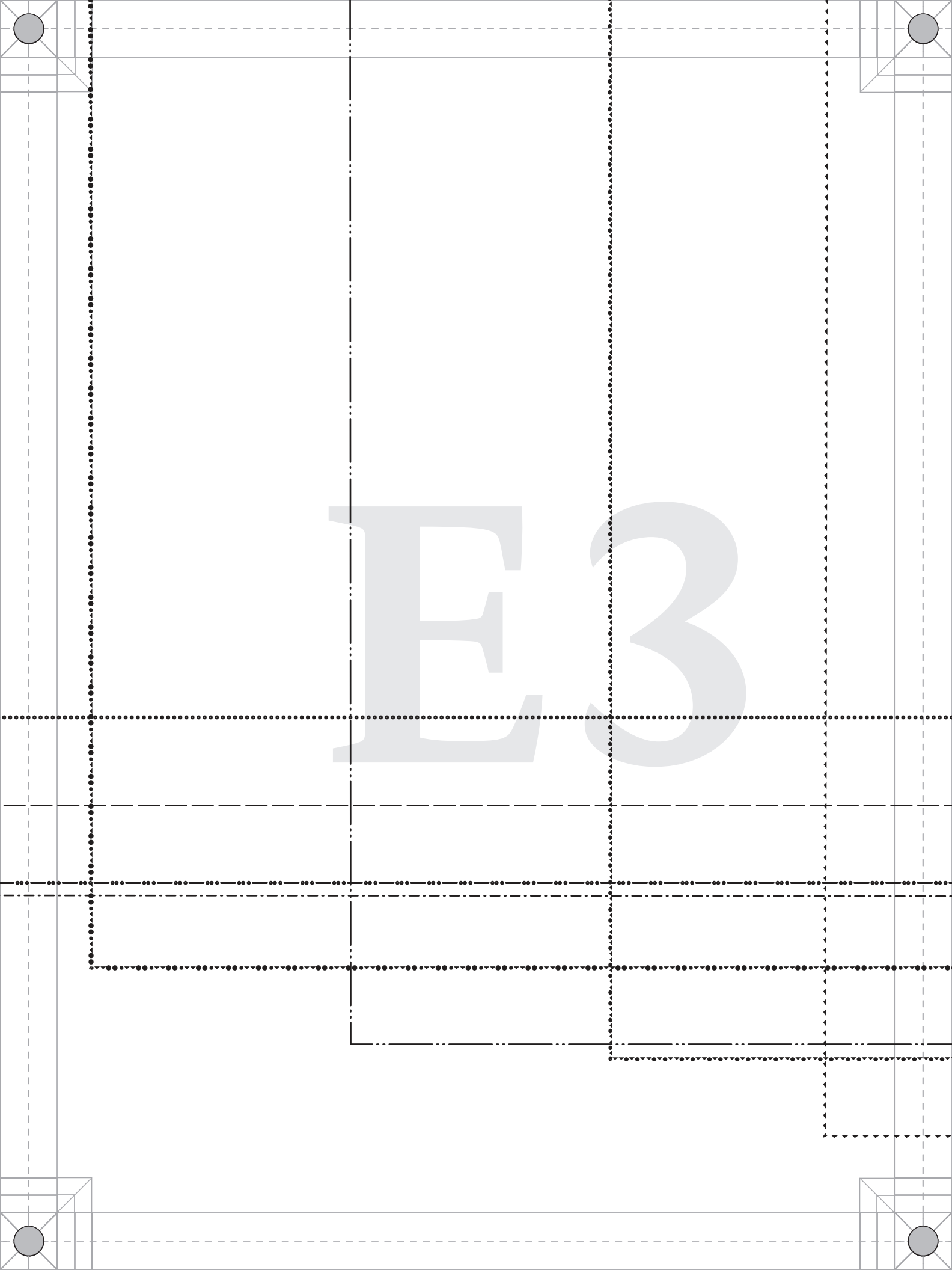
E3

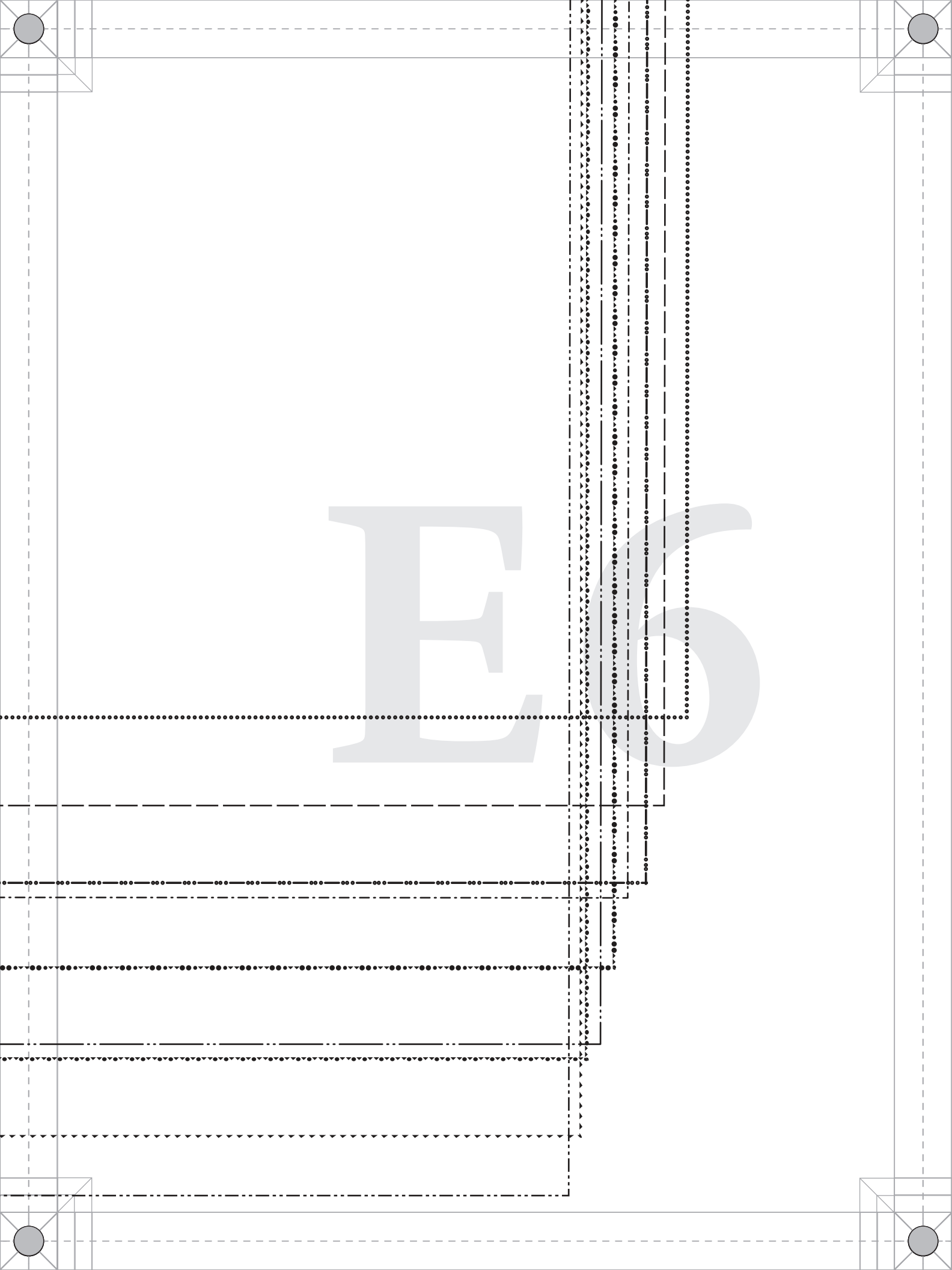

E7

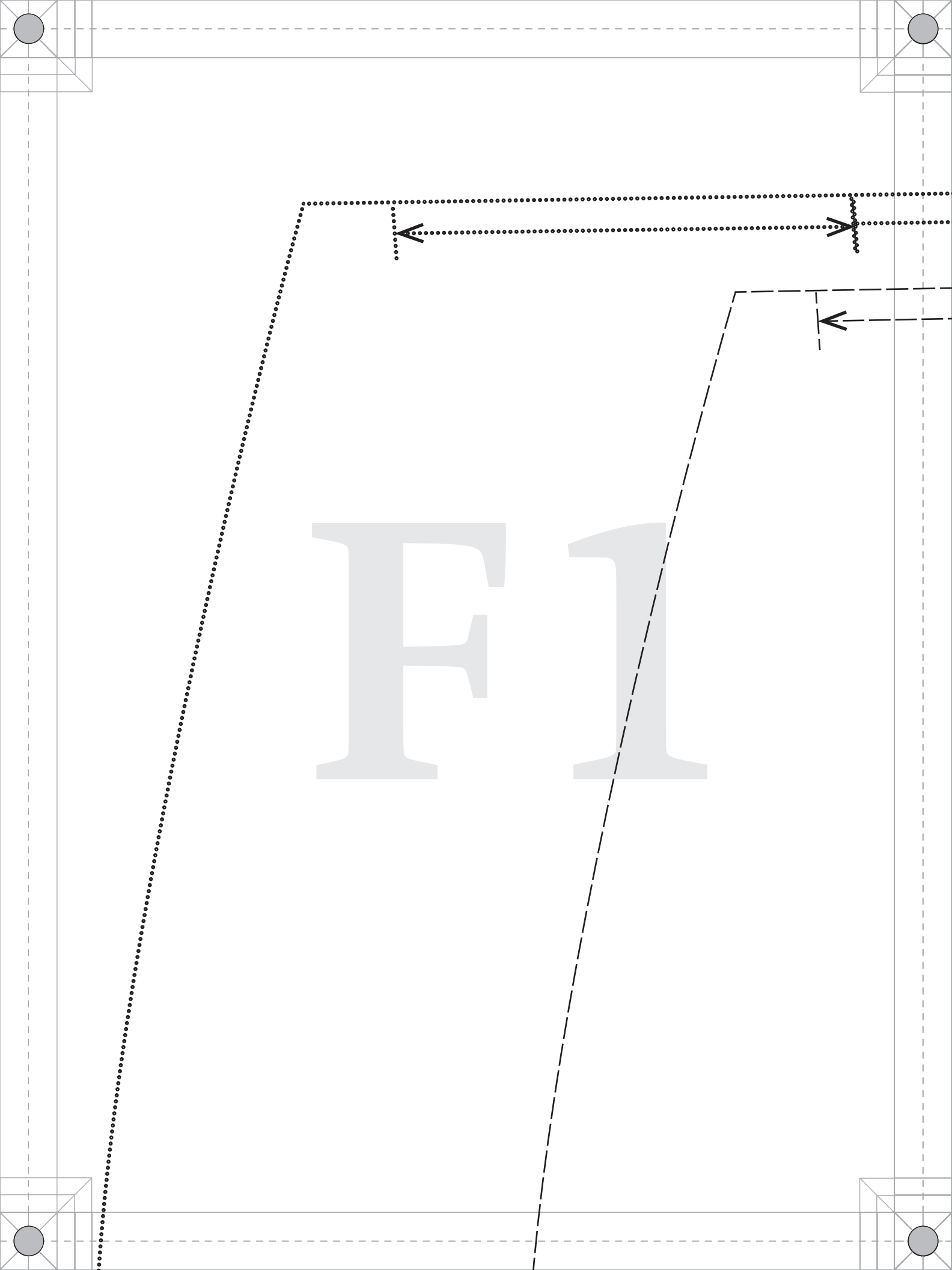
F1

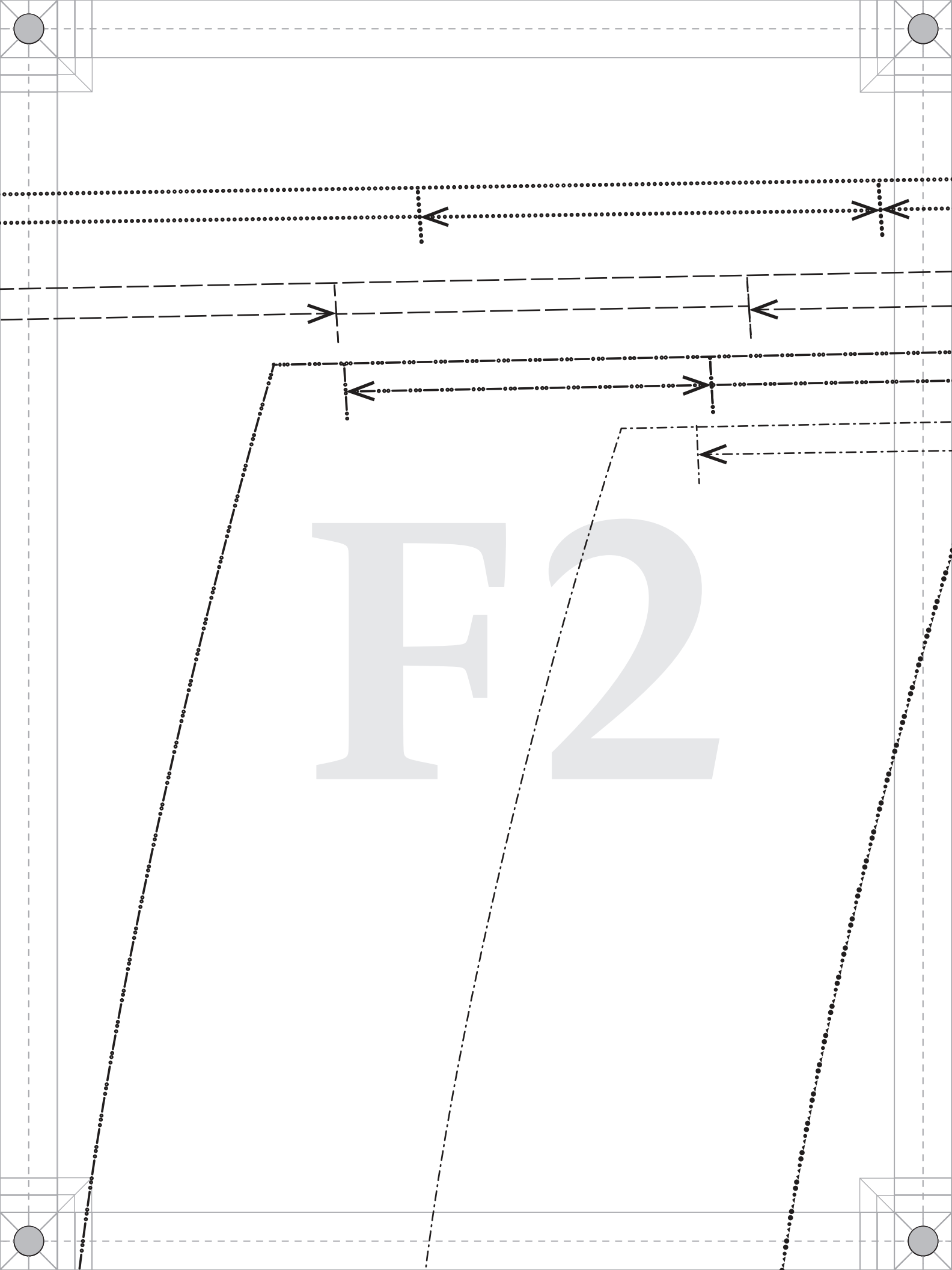
F2

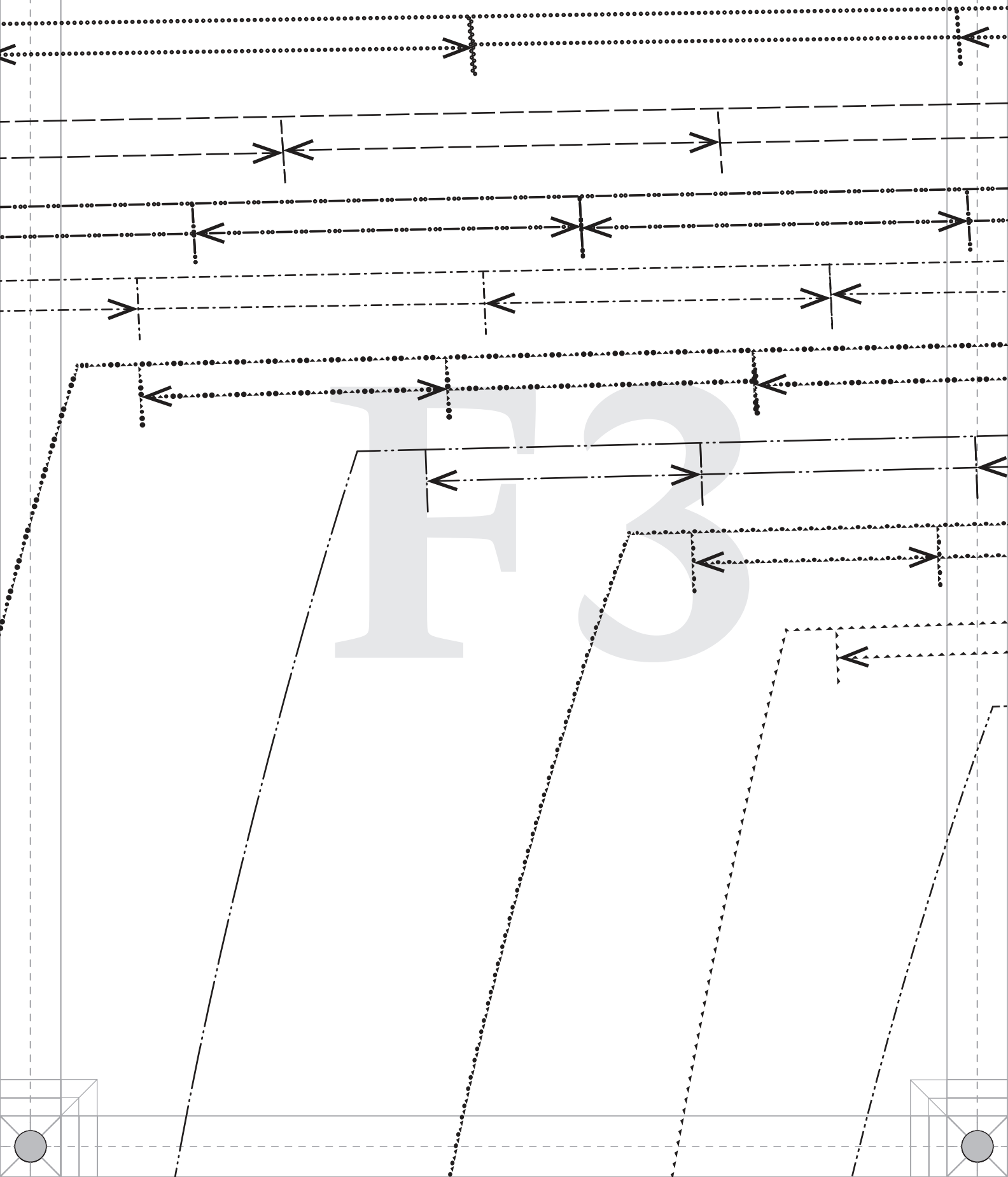

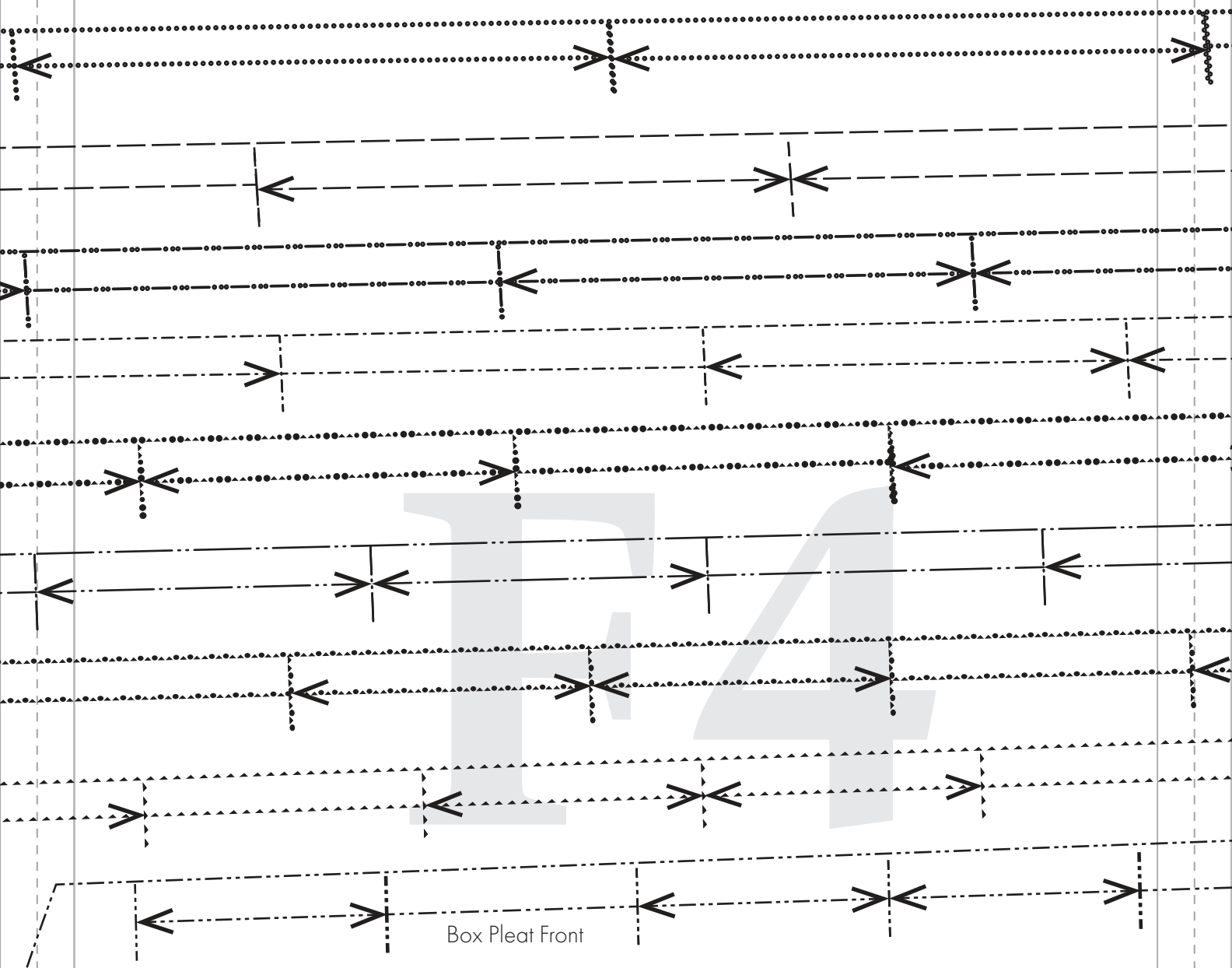

Box Pleat Front

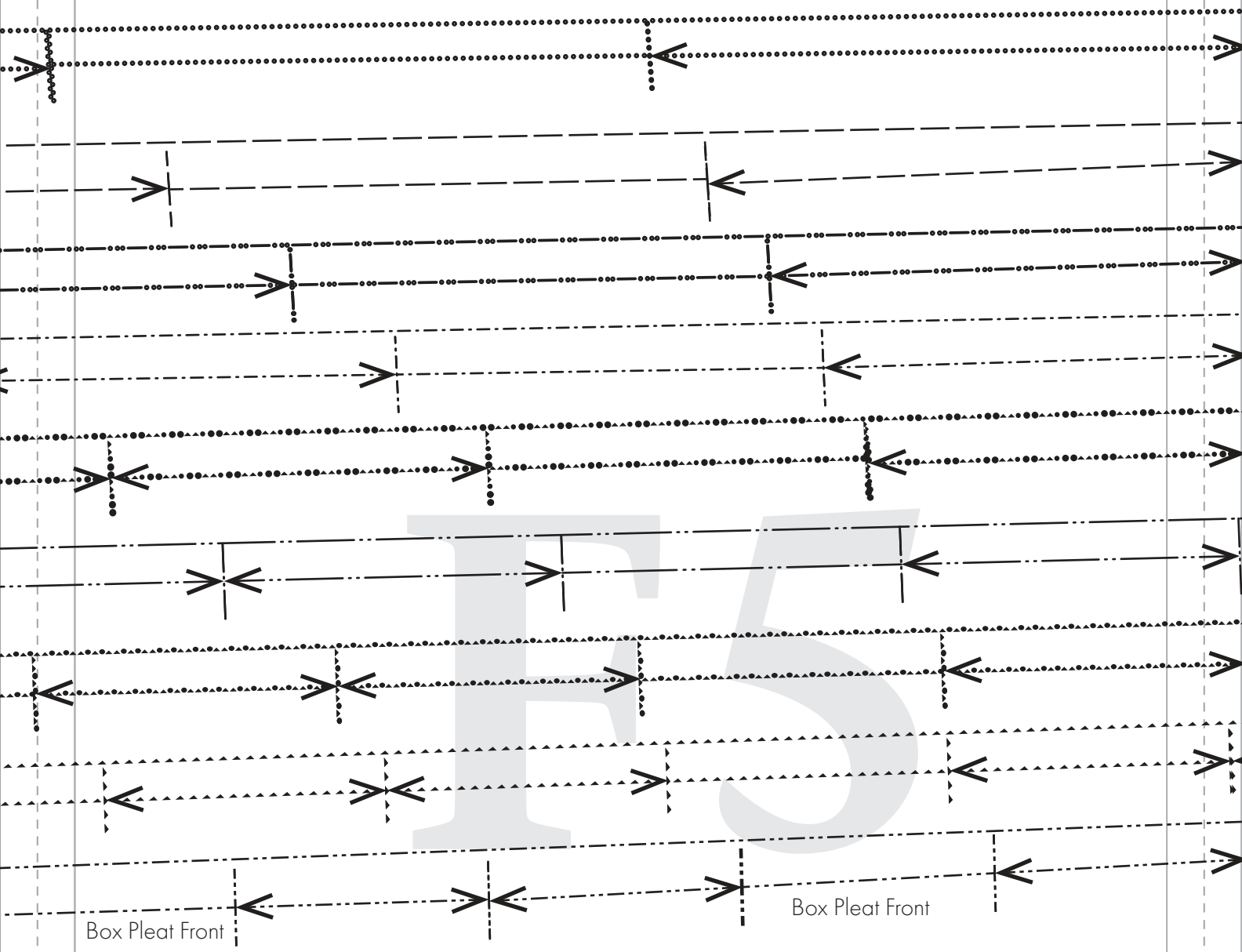
Box Pleat Front
Box Pleat Front

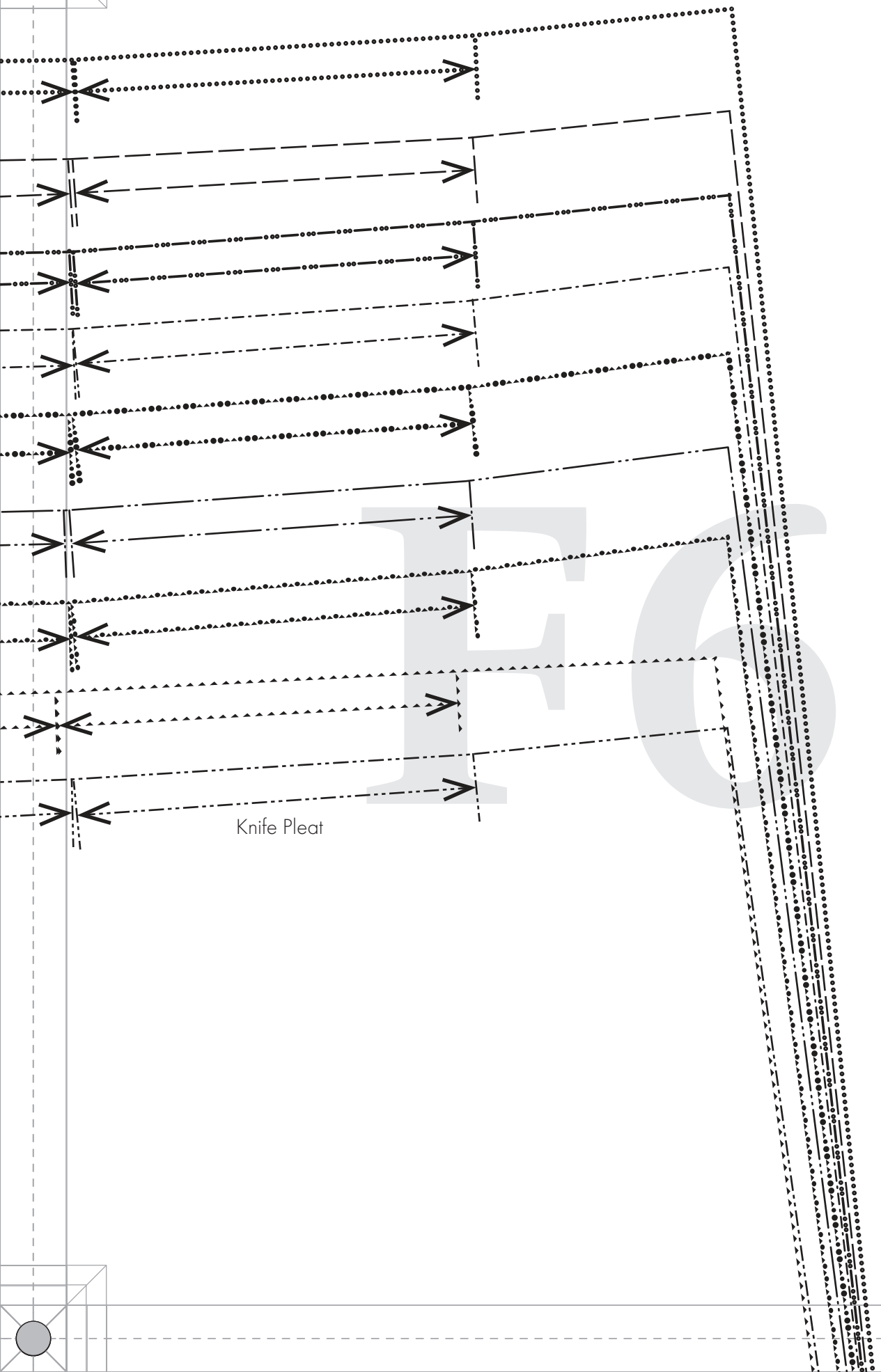

Knife Pleat

PATTERNS BY mood FABRICS MDF561

#MoodPetalumaPattern

"The Petaluma Pleated Trousers"
MDF561

D - FRONT WAISTBAND LEFT

Cut 1

Ladies Sizes 00-0 to 30-32

1/2" seam allowances (SA's) included

G1

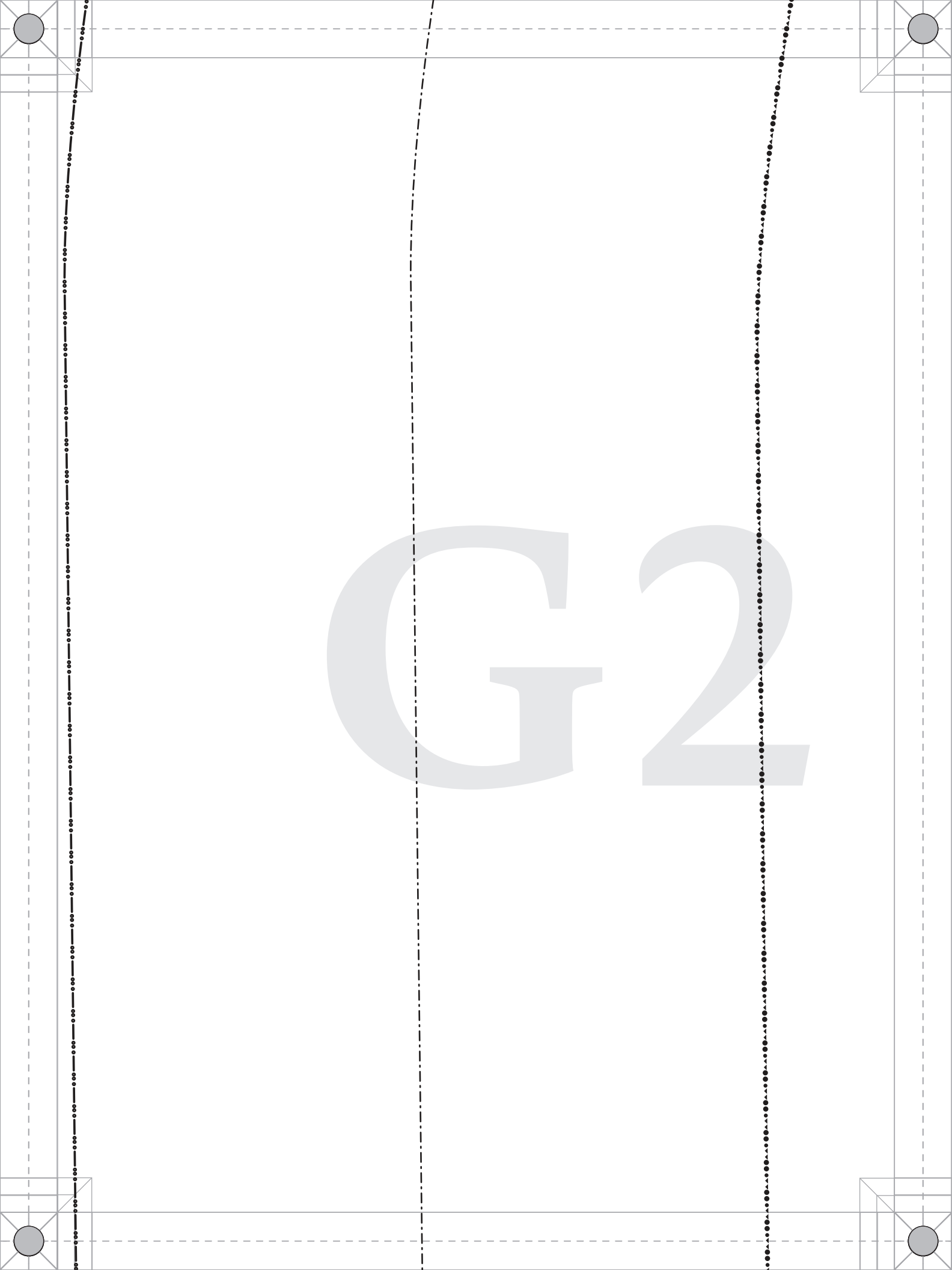
G2

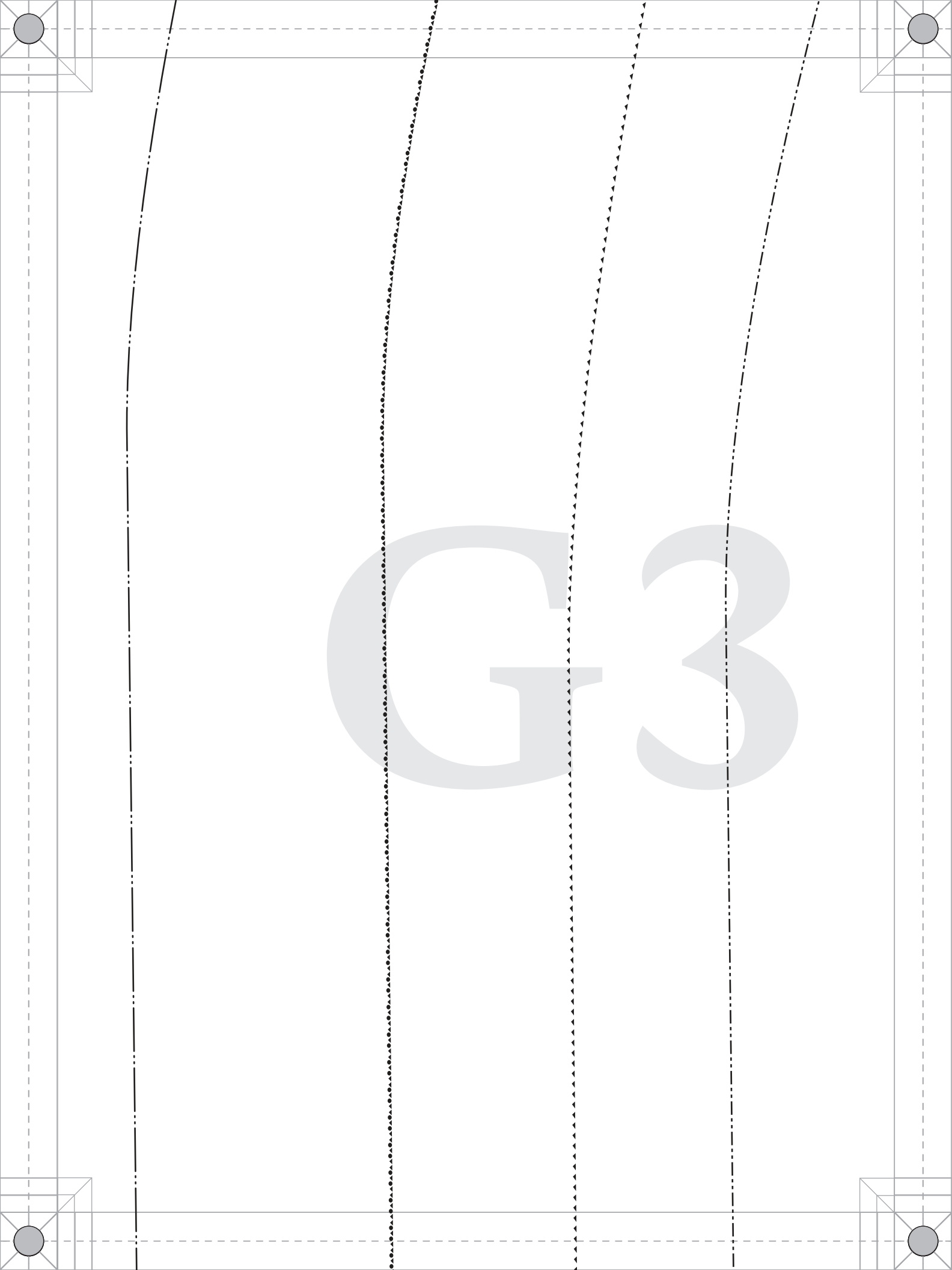
G3

G4

PATTERNS BY mood FABRICS MDF561

#MoodPetalumaPattern

"The Petaluma Pleated Trousers" MDF561

B - BACK

Cut 2 mirrored

Ladies Sizes 00-0 to 30-32

1/2" seam allowances (SA's) included

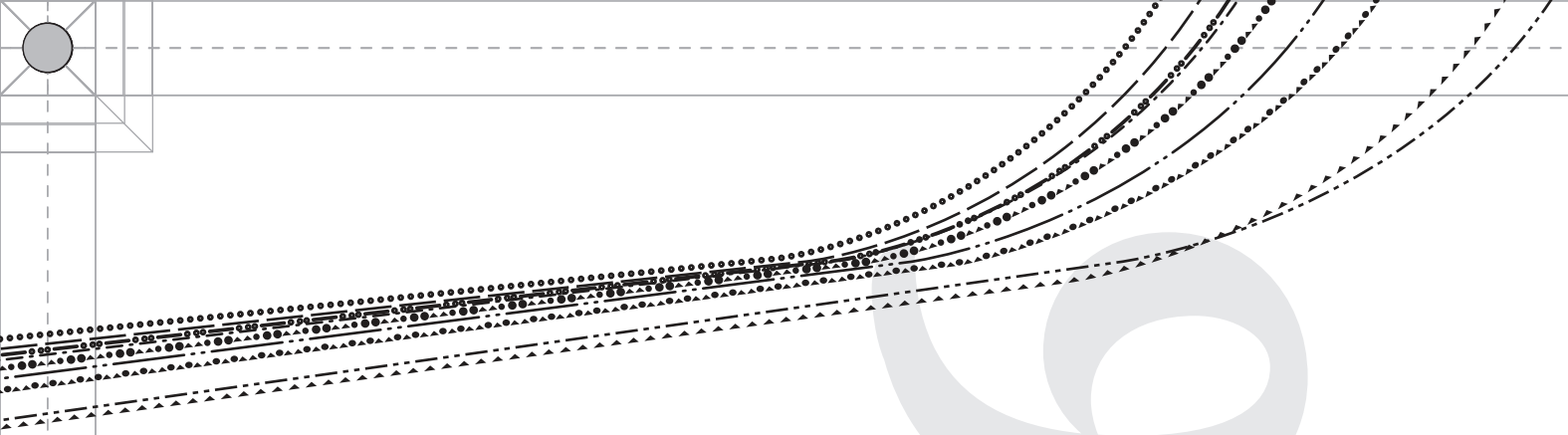

GRAINLINE

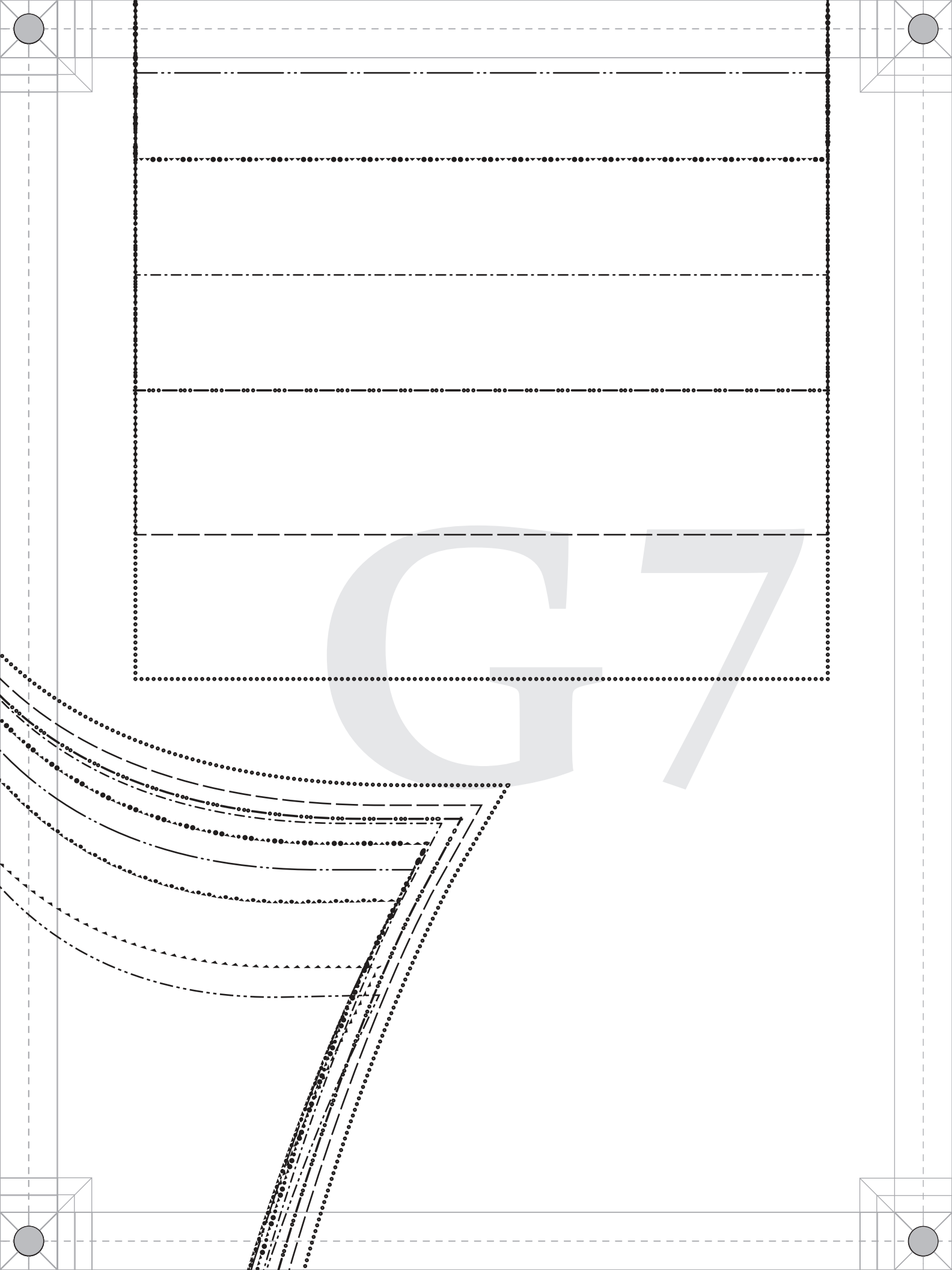

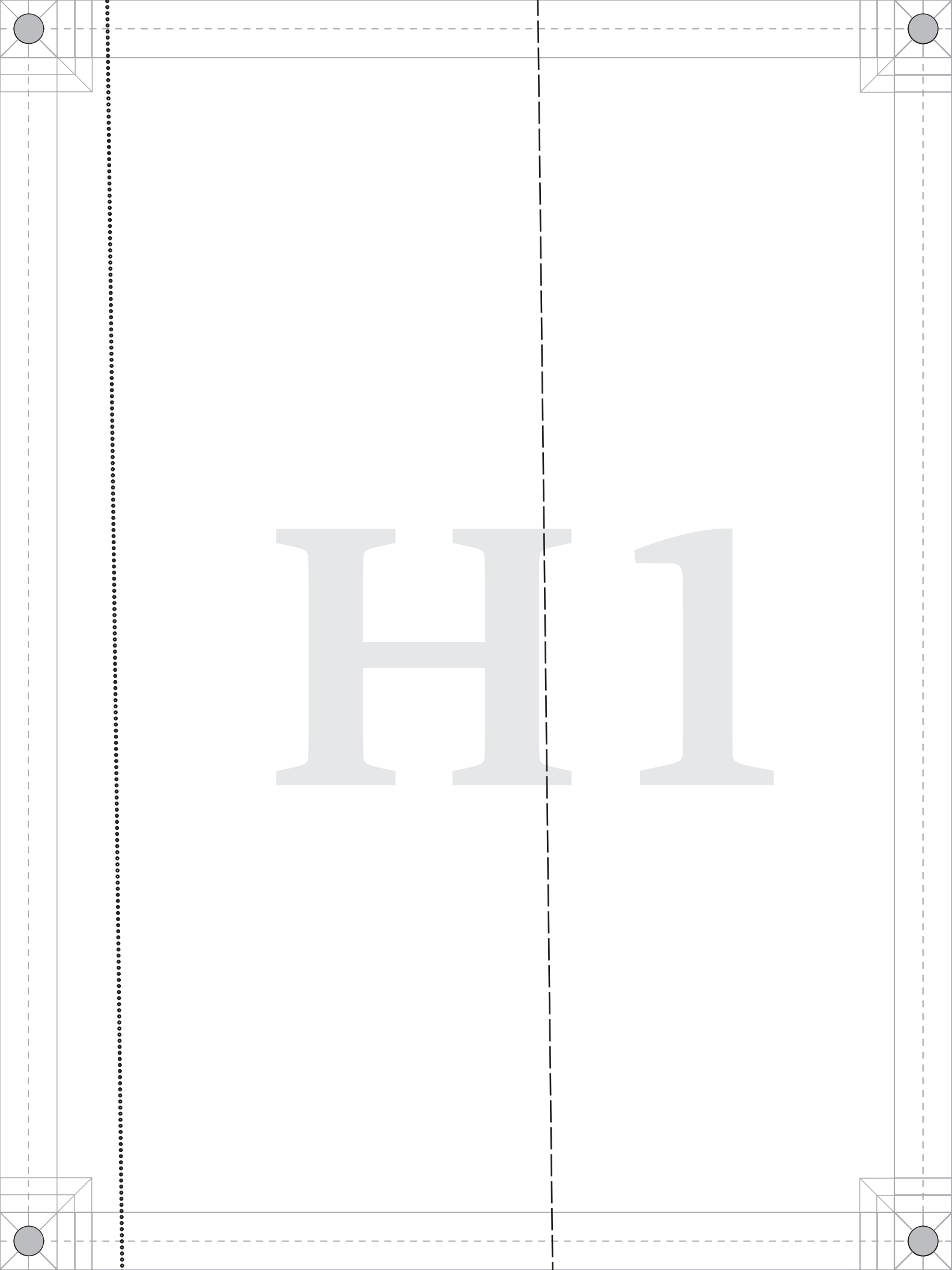
H1

H2

H3

H4

H5

H6

PATTERNS BY mood FABRICS MDF561

#MoodPetalumaPattern

"The Petaluma Pleated Trousers"
MDF561

F - WAISTBAND OVERLAY

Cut 2 mirrored

Ladies Sizes 00-0 to 30-32

1/2" seam allowances (SA's) included

12

13

14

15

16

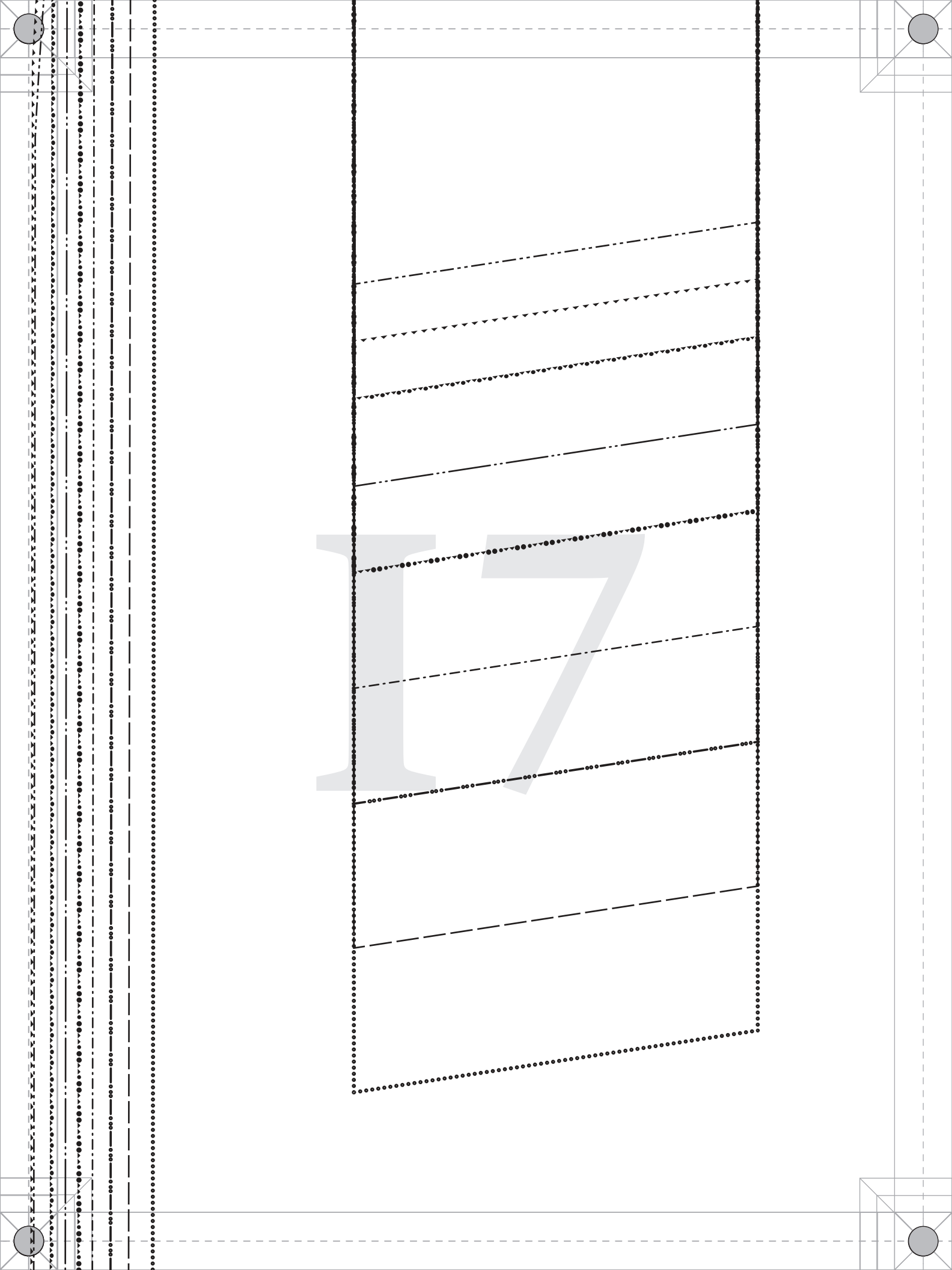

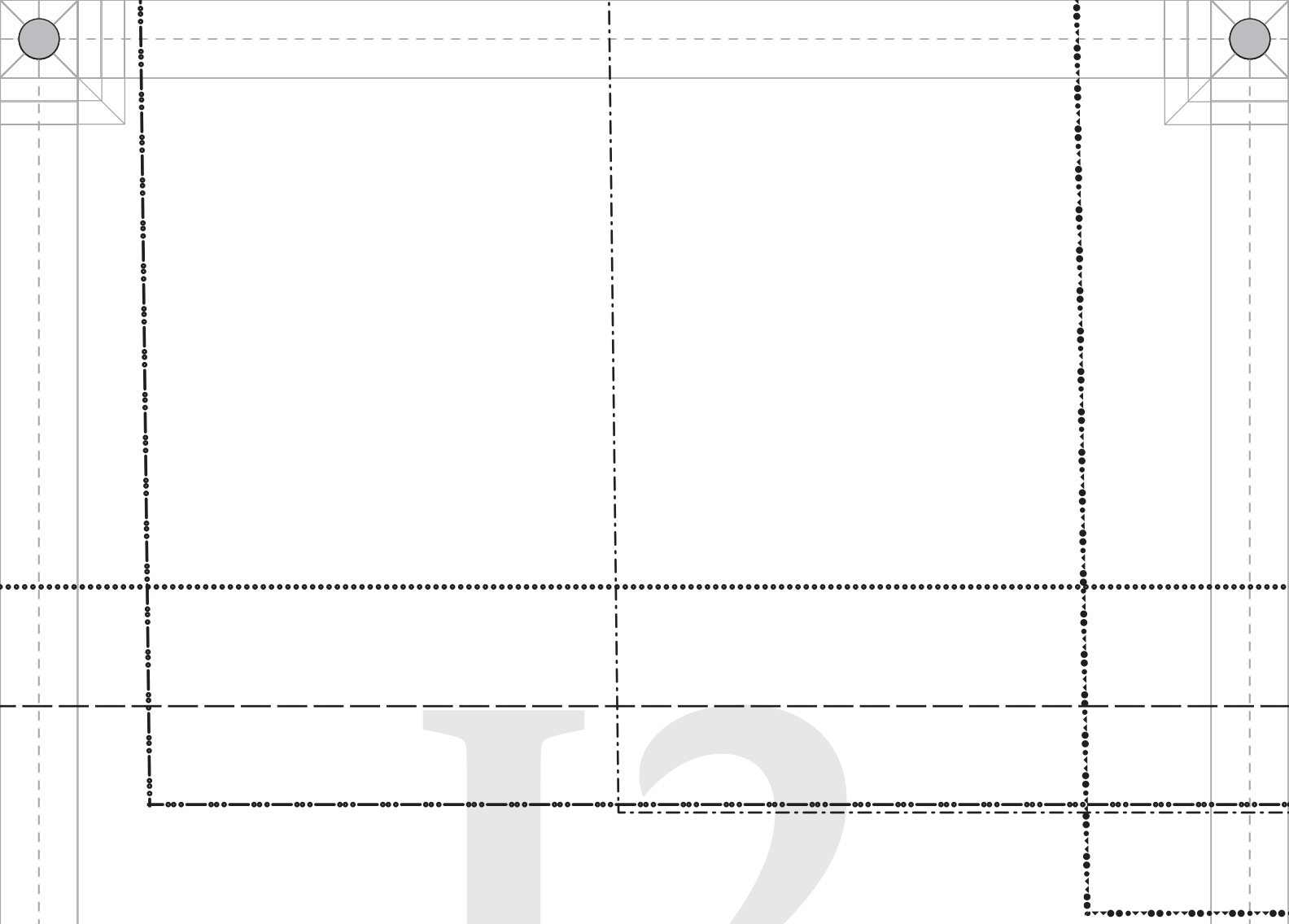
J2

J3

J4

PATTERNS BY mood FABRICS MDF561

#MoodPetalumaPattern

"The Petaluma Pleated Trousers"
MDF561

I - FLY SHIELD
Cut 1

Ladies Sizes 00-0 to 30-32

PATTERNS BY mood FABRICS MDF561

#MoodPetalumaPattern

"The Petaluma Pleated Trousers"
MDF561

H - FLY
Cut 2

Ladies Sizes 00-0 to 30-32