PATTERNS BY mood FABRICS MDF551

#MoodEspressoPattern

"The Espresso Trench Vest"

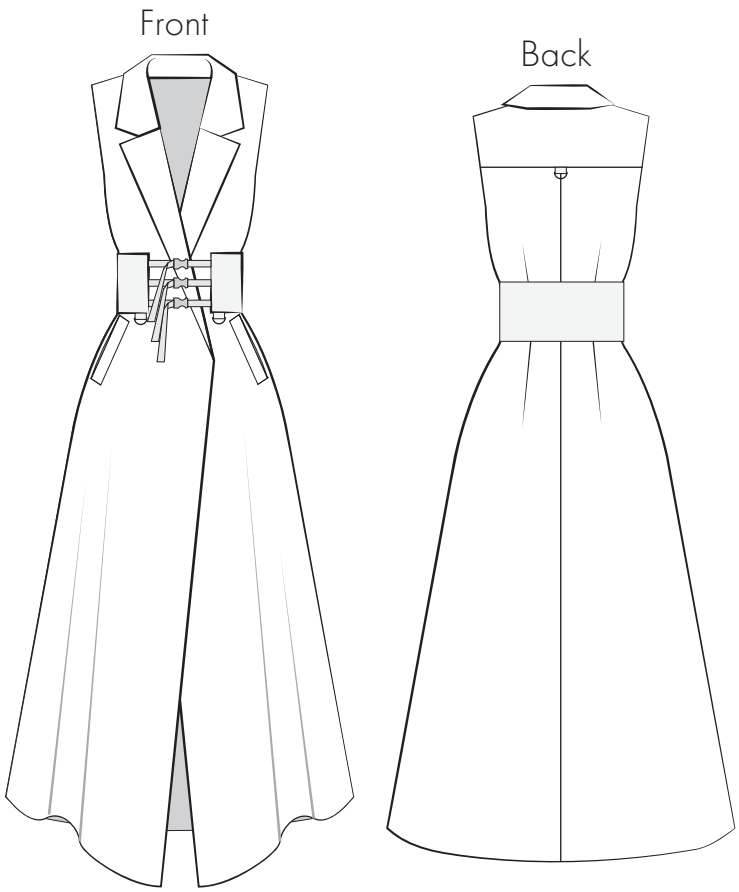

STOP!

Print only this page first to check accuracy. The Mood square above should measure 2 inches. Print "actual size" in "portrait" mode (not auto center). Formatted for both US Letter & A4 paper sizes.

Formatted for both US Letter & A4 Paper

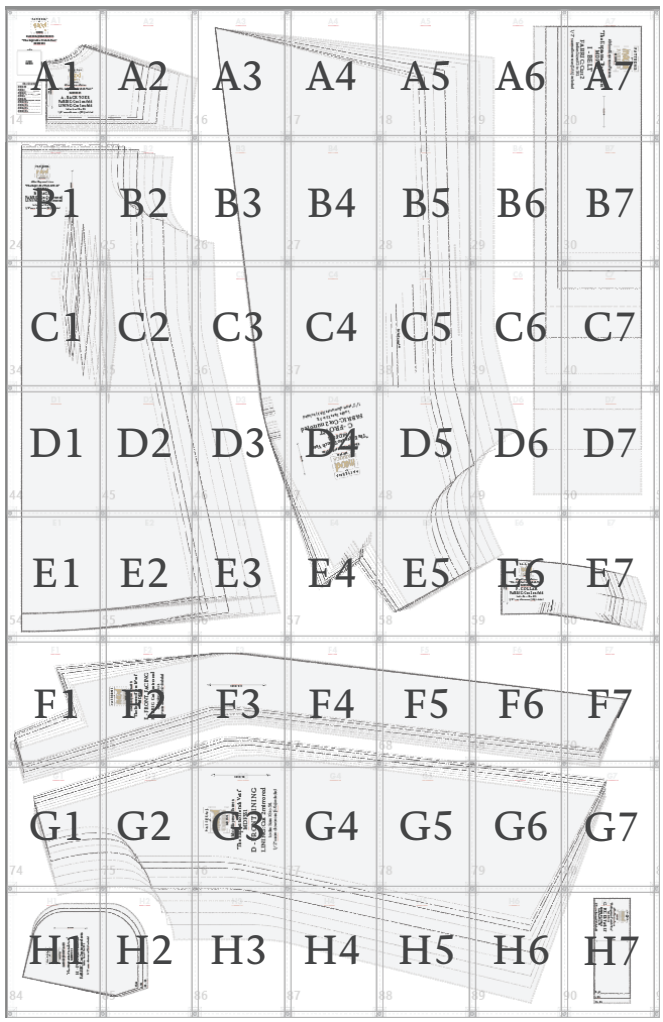

Trimless Option:
This is the fastest! No trimming needed! Place left-side margins over right-side margins, overlapping dashed lines and dots. In the same fashion, top margins will overlap bottom margins. Slight unprinted gaps are normal for this method.

Trimmed Option:
This removes any unprinted gaps. Trim along the top and right margins at the dashed lines. Overlap the trimmed margins to the untrimmed margins, matching dashed lines and dots.

Tip! Build rows first, then join the rows together as you go.

©2026 MoodFabrics.com / MoodSewciety.com
Mass production, resale, or distribution of this pattern in any form is strictly prohibited.

mood SEWCIETY

PATTERNS BY mood FABRICS MDF551

#MoodEspressoPattern

MDF551 - "The Espresso Trench Vest"

Ladies Sizes XS to 5XL

BODY MEASUREMENTS - IN INCHES (Chart 1)

SIZE	XS	S	M	L	XL	2XL	3XL	4XL	5XL
BUST	31 - 32	33 - 34	35 - 36	37 - 39	40 - 43	44 - 47	48 - 51	52 - 55	56 - 60
WAIST	23 - 24	25 - 26	27 - 28	29 - 31	32 - 35	36 - 39	40 - 43	44 - 47	48 - 52
HIPS	34 - 35	36 - 37	38 - 39	40 - 42	43 - 46	47 - 50	51 - 54	55 - 58	59 - 63

APPROXIMATE FINISHED GARMENT MEASUREMENTS - IN INCHES (Chart 2)

SIZE	XS	S	M	L	XL	2XL	3XL	4XL	5XL
BUST*	34	36	38	41	45	49	53	57	61
WAIST*	34	36	38	41	45	49	53	57	61
HIPS*	41	43	45	48	52	56	60	64	69
LENGTH**	43	43	43	43.5	43.5	43.5	44	44	44

*Measurements with the vest fully closed.
**Back length from nape to hem.

Size guide is based on the suggested design & wearing ease for this style. You can also choose the size according to your desired finished garment measurements, blending between sizes as needed. Measure the printed patterns to make sure the dimensions are according to the desired fitting and adjust if needed before cutting the fabric. For best results sew a test garment in a similar fabric to adjust your pattern.

Recommended Fabric: Main Fabric: Soft Lightweight Polyester Gabardine - Dark Brown - Stefanie Collection.
Lining: Bemberg Lining - Black - Lucidum Collection.

We love creating these free patterns for the community and we want to keep them free! In return, we hope you check out MoodFabrics.com for your next project!

Want to use one of our patterns to make a garment to sell? Our patterns are royalty-free! We just ask that you credit us with:
MoodSewciety.com
or
MoodFabrics.com
in your product description.

FOR SEWING INSTRUCTIONS AND MORE INFORMATION:
Scan the QR code or visit MoodSewciety.com and search "MDF551"

1/2" seam allowances (SA's) included unless stated otherwise.

REMEMBER TO SHARE YOUR MADE WITH MOOD LOOK!

Tag us and use:
#MoodEspressoPattern
for a shot at being featured on our social media

@mood.fabrics
@moodfabrics
@Mood_Fabrics
@moodfabrics
@moodfabrics

The Mood Sewciety Team

©2026 MoodFabrics.com / MoodSewciety.com
Mass production, resale, or distribution of this pattern in any form is strictly prohibited.

mood SEWCIETY

#MoodEspressoPattern

PATTERNS BY mood FABRICS MDF551

"The Espresso Trench Vest"

PATTERN PIECES

A	**BACK YOKE** FABRIC - CUT 1 ON FOLD LINING - CUT 1 ON FOLD
B	**BACK** FABRIC - CUT 2 MIRRORED LINING - CUT 2 MIRRORED
C	**FRONT** FABRIC - CUT 2 MIRRORED
D	**FRONT LINING** LINING - CUT 2 MIRRORED
E	**FRONT FACING** FABRIC - CUT 2 MIRRORED
F	**COLLAR** FABRIC - CUT 2 ON FOLD
G	**POCKET WELT** FABRIC - CUT 4
H	**POCKET BAG** LINING - CUT 2 MIRRORED SETS
I	**BELT** FABRIC - CUT 2

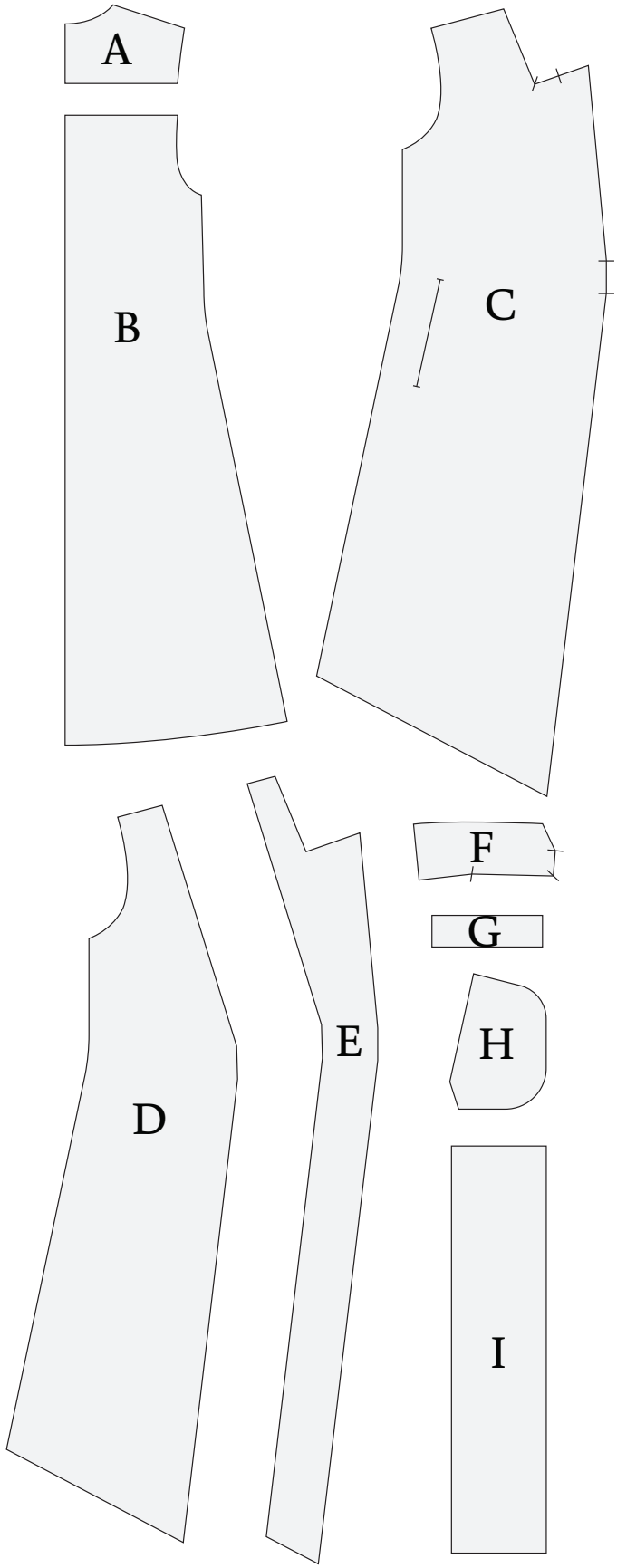

In addition to the pattern pieces included in this file, you will also need fabric strips for the D-rings and belt. Scan the QR code on the previous page to access the Mood Sewciety Blog, where you'll find the cutting instructions. The strip dimensions vary depending on the D-rings, buckle, and size selected for your belt.

©2026 MoodFabrics.com / MoodSewciety.com
Mass production, resale, or distribution of this pattern in any form is strictly prohibited.

mood SEWCIETY

PATTERNS BY mood FABRICS MDF551

#MoodEspressoPattern

"The Espresso Trench Vest"
MDF551

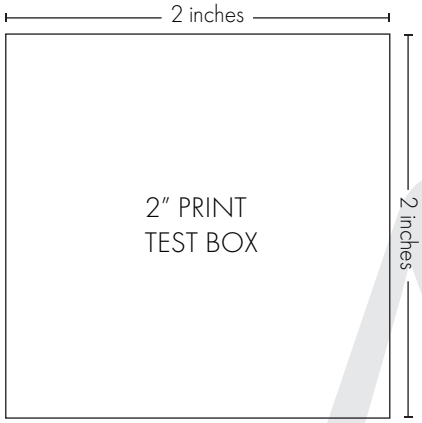

Size Line Key
SIZE XS
SIZE S
SIZE M
SIZE L
SIZE XL
SIZE 2XL
SIZE 3XL
SIZE 4XL
SIZE 5XL



PATTERNS BY mood FABRICS MDF551

#MoodEspressoPattern

"The Espresso Trench Vest"
MDF551

A - BACK YOKE

FABRIC: Cut 1 on fold
LINING: Cut 1 on fold

Ladies Sizes XS to 5XL
1/2" seam allowances (SA's) included

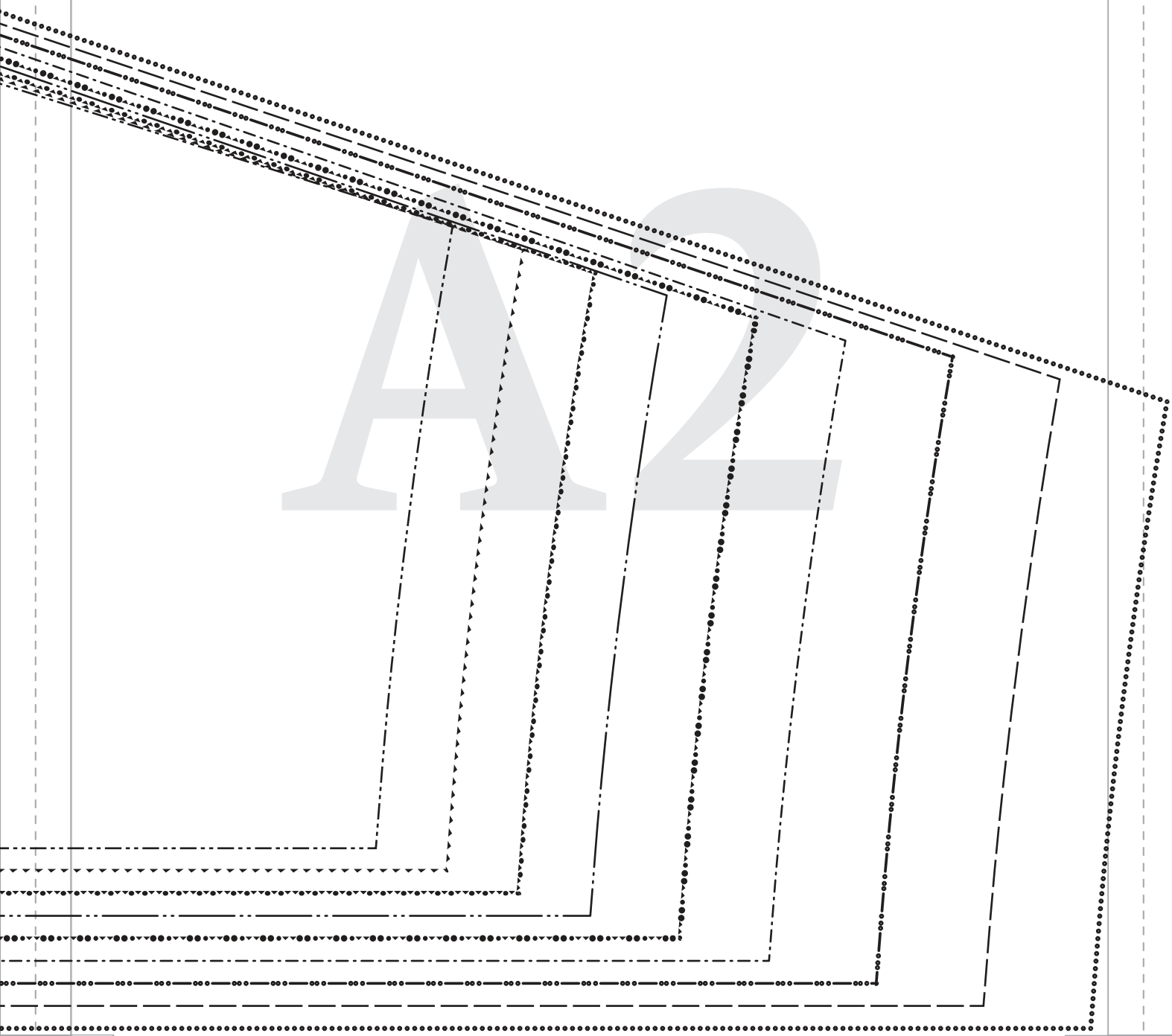
A2

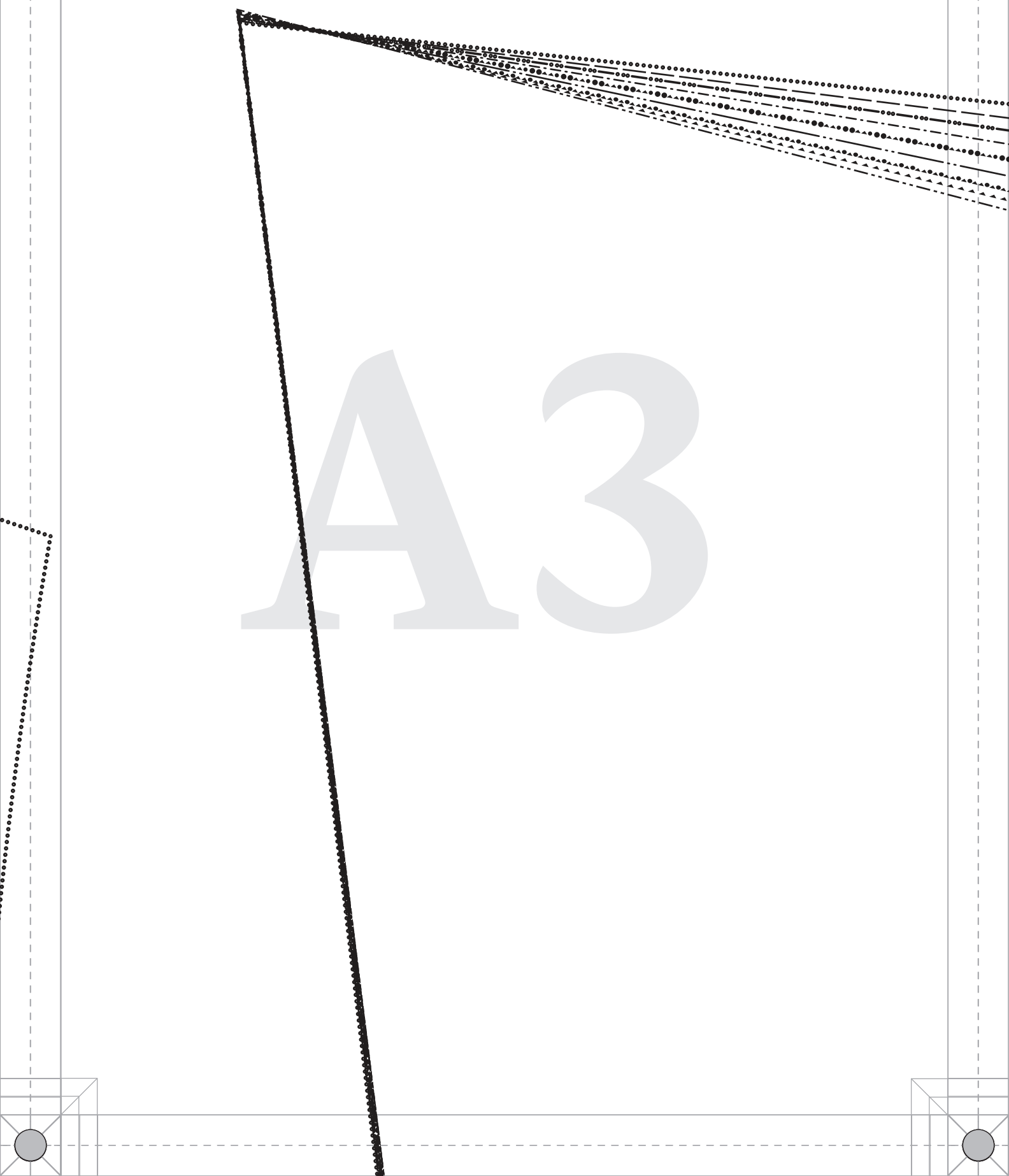
A3

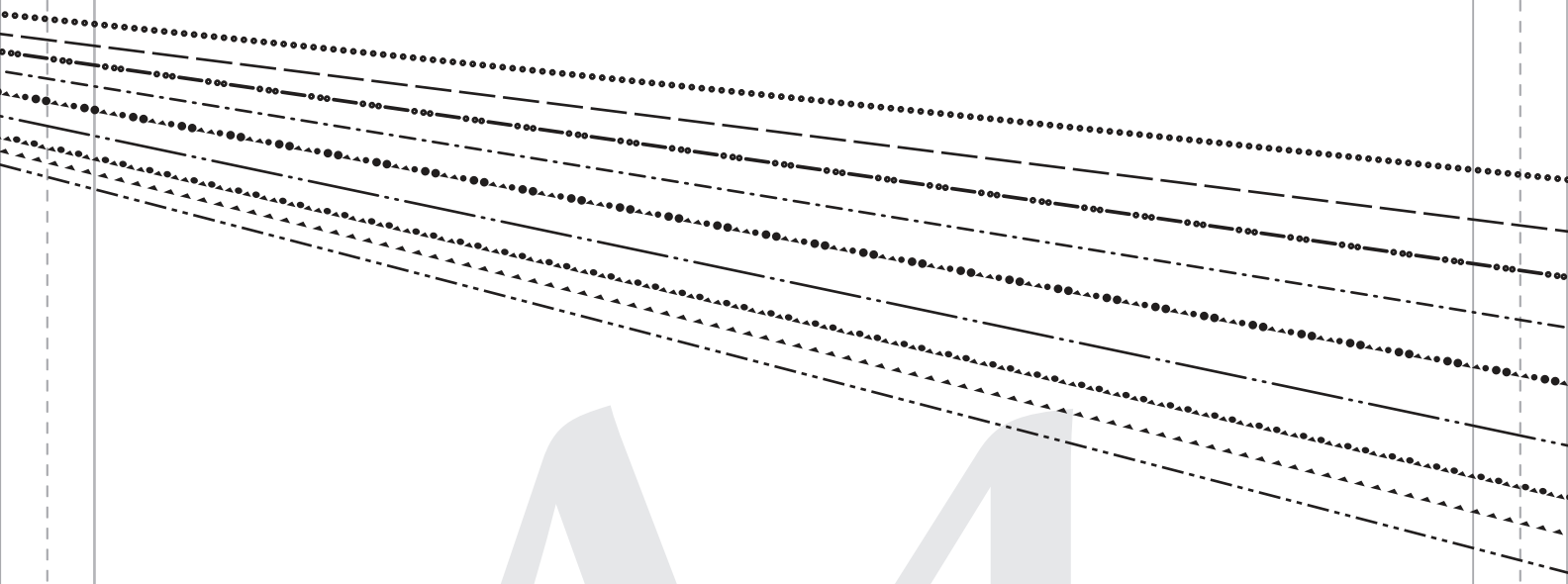

A4

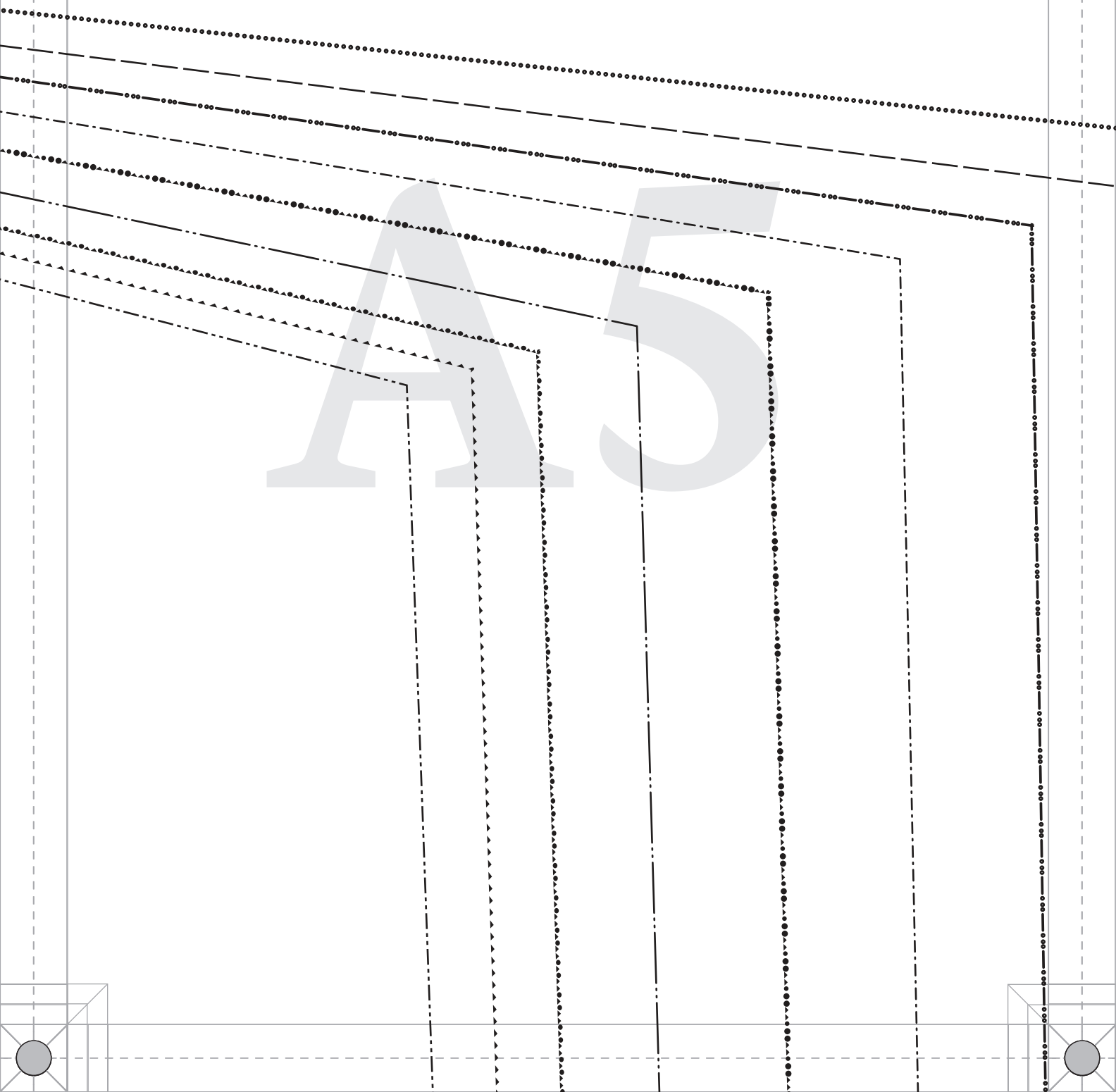
A5

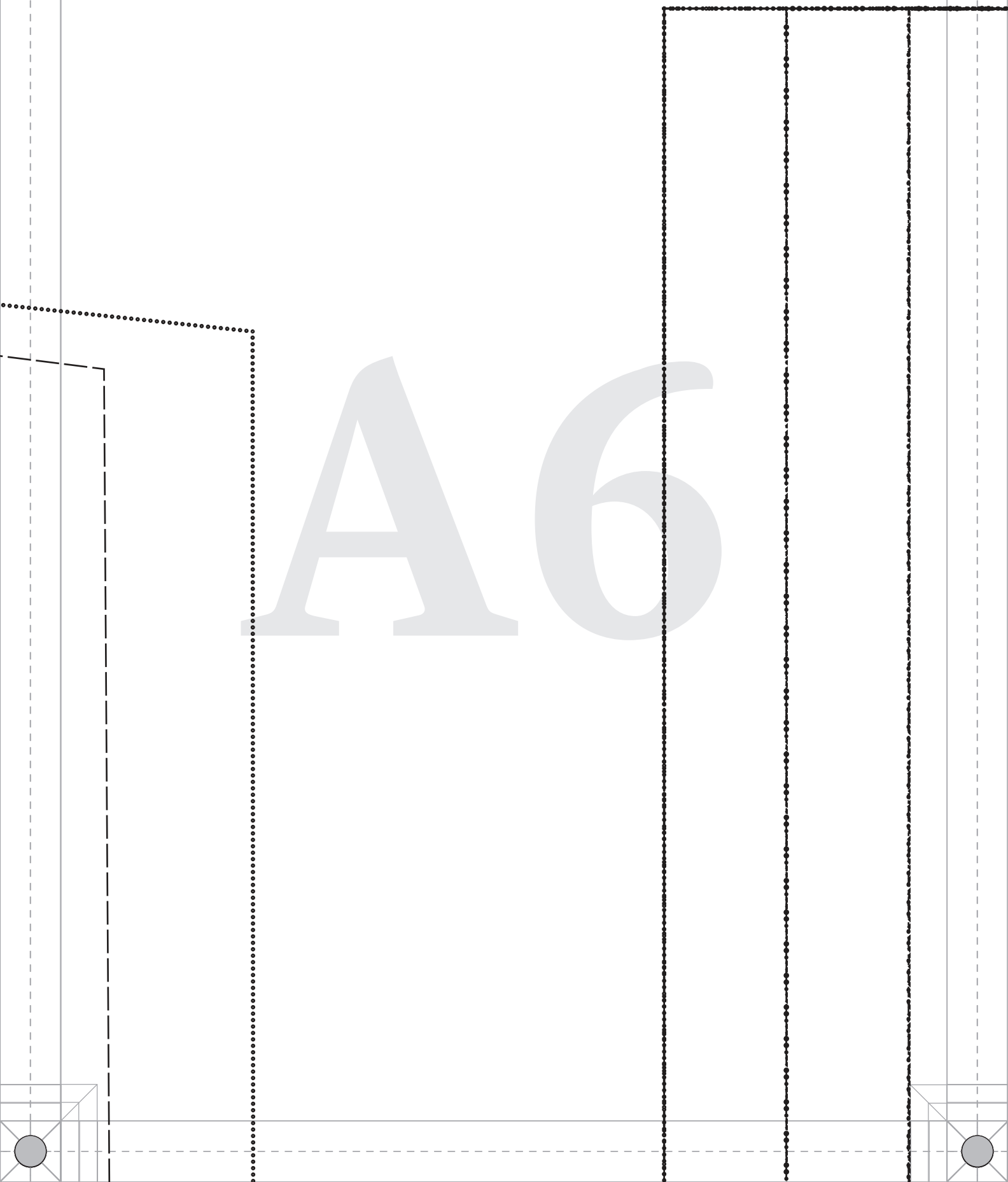
A6

PATTERNS BY mood FABRICS MDF551

#MoodEspressoPattern

"The Espresso Trench Vest" MDF551

I - BELT

FABRIC: Cut 2

Ladies Sizes XS to 5XL

1/2" seam allowances (SA's) included



PATTERNS BY mood FABRICS MDF551

#MoodEspressoPattern

"The Espresso Trench Vest"
MDF551

B - BACK
FABRIC: Cut 2 mirrored
LINING: Cut 2 mirrored

Ladies Sizes XS to 5XL

1/2" seam allowances (SA's) included

B1



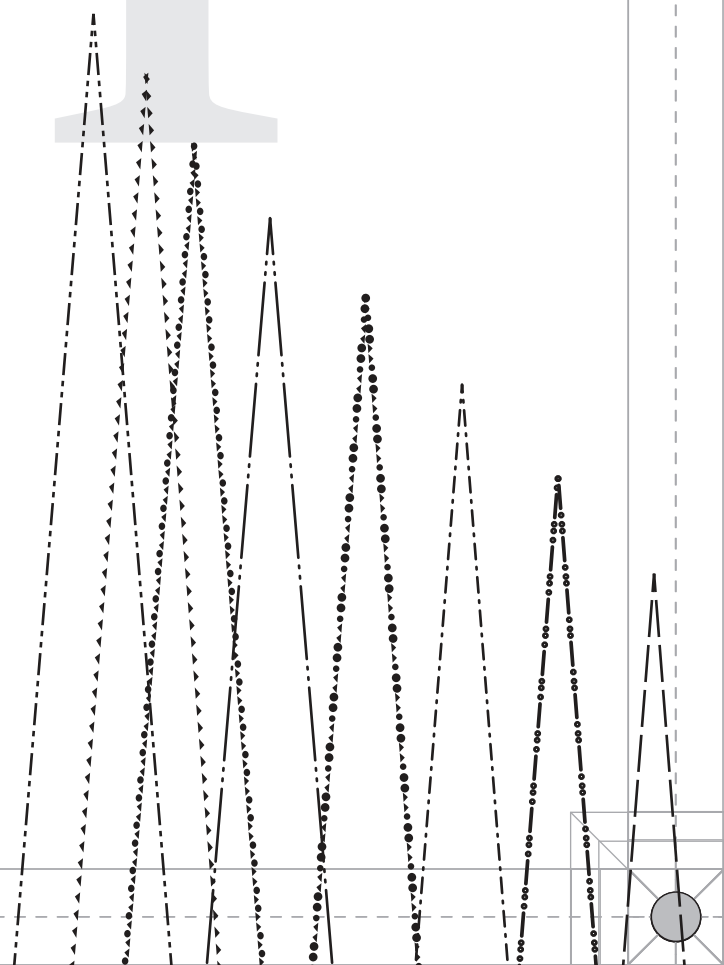

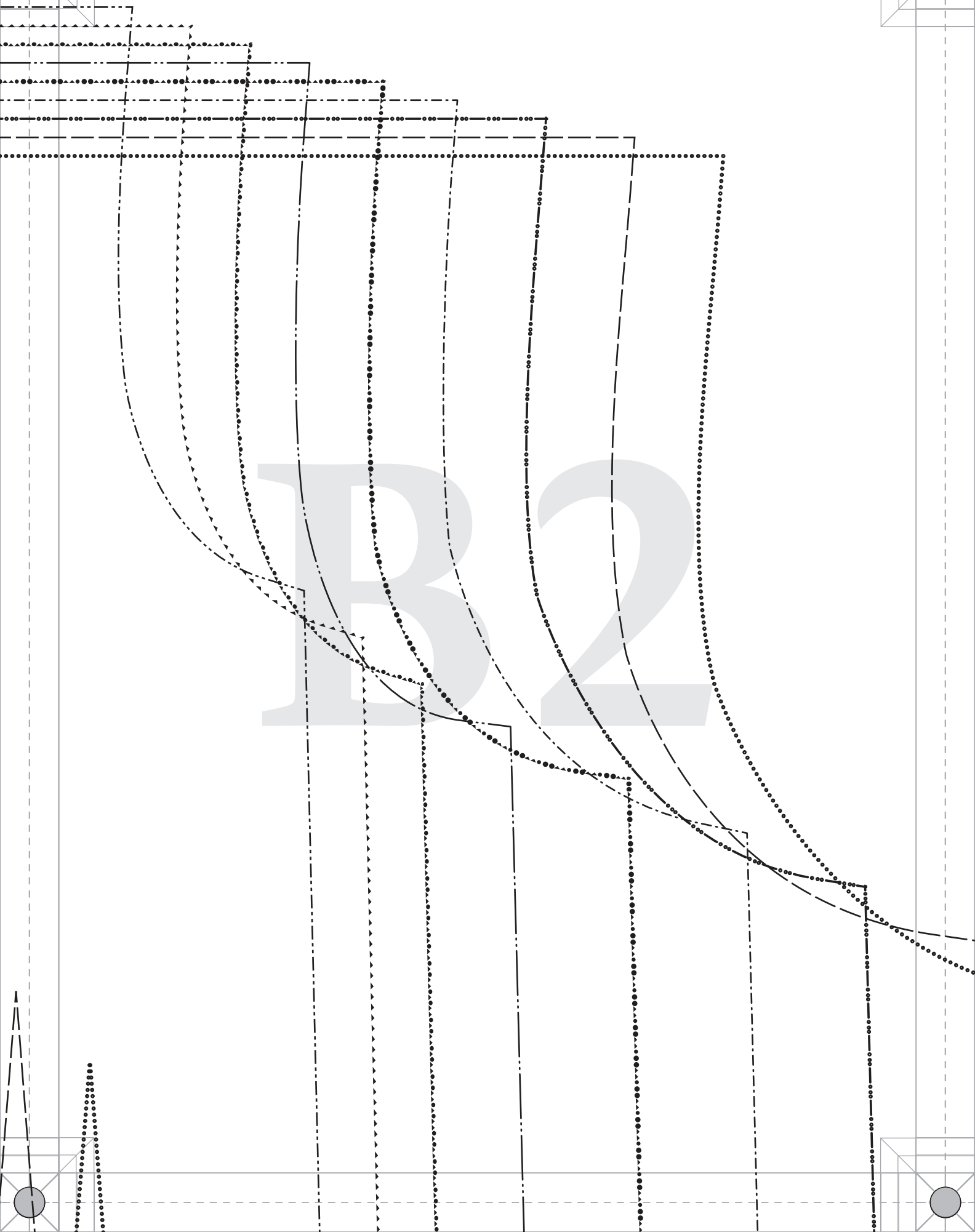
B2

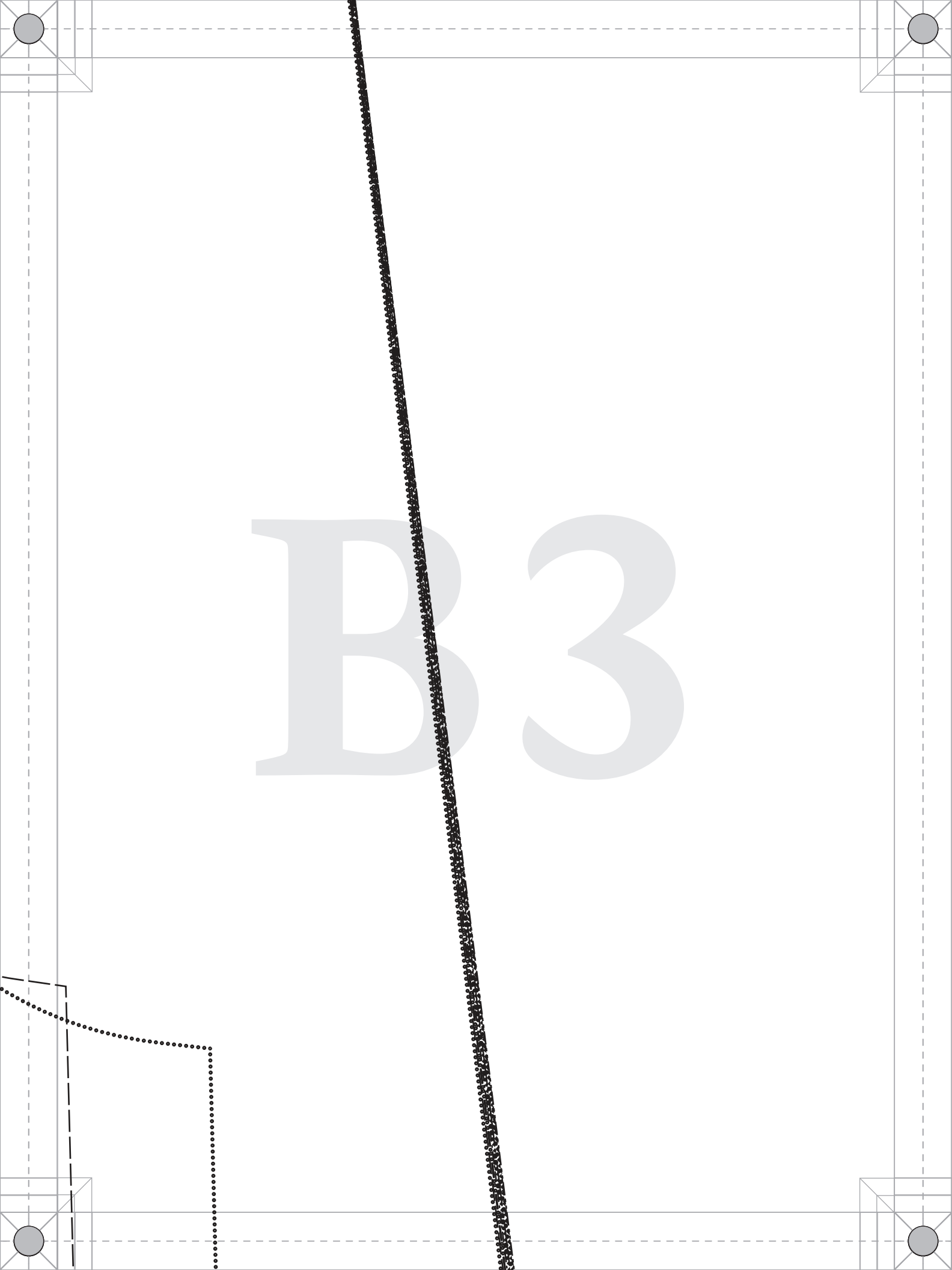
B3

B4

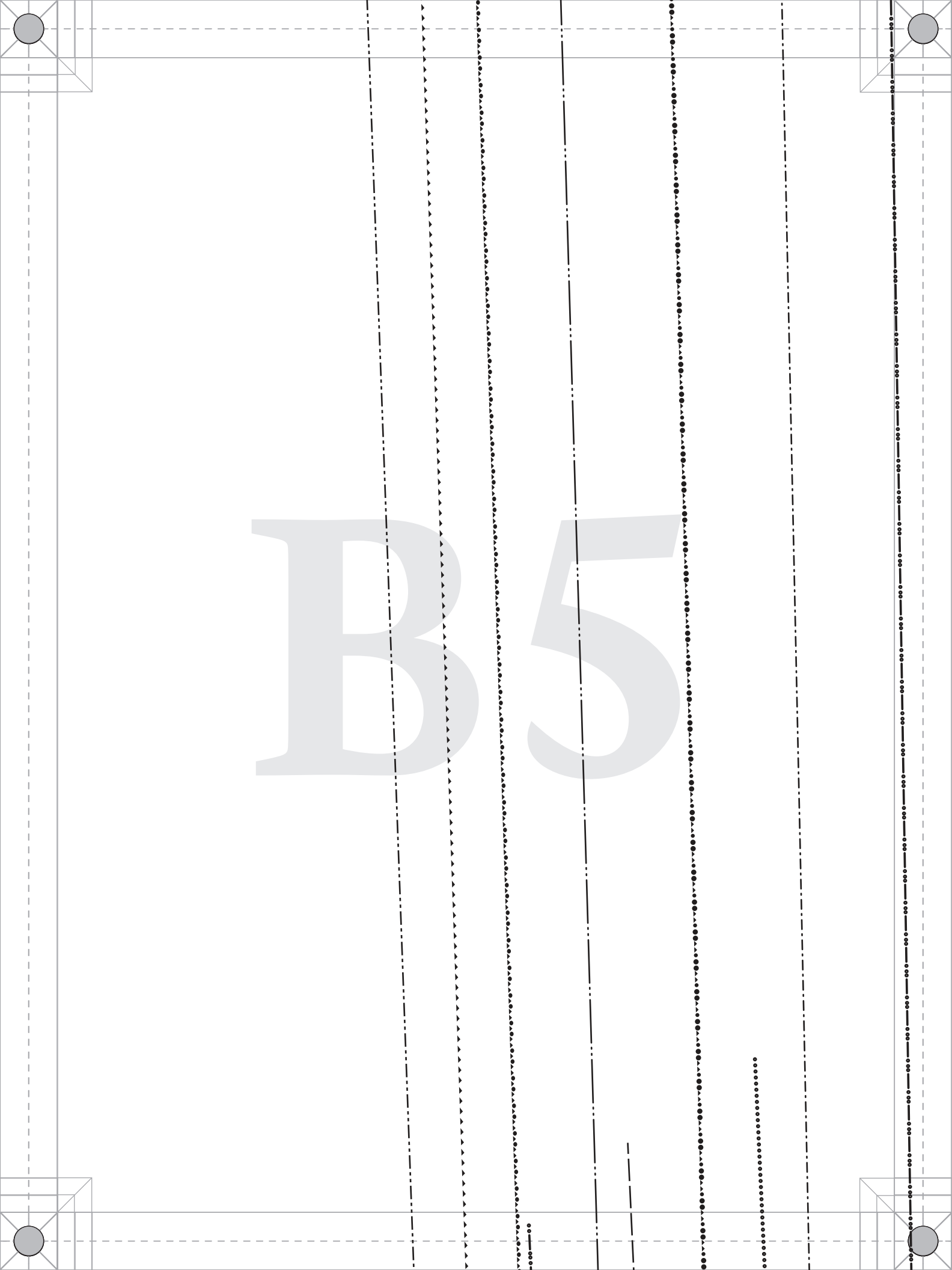
B5

B6

B7

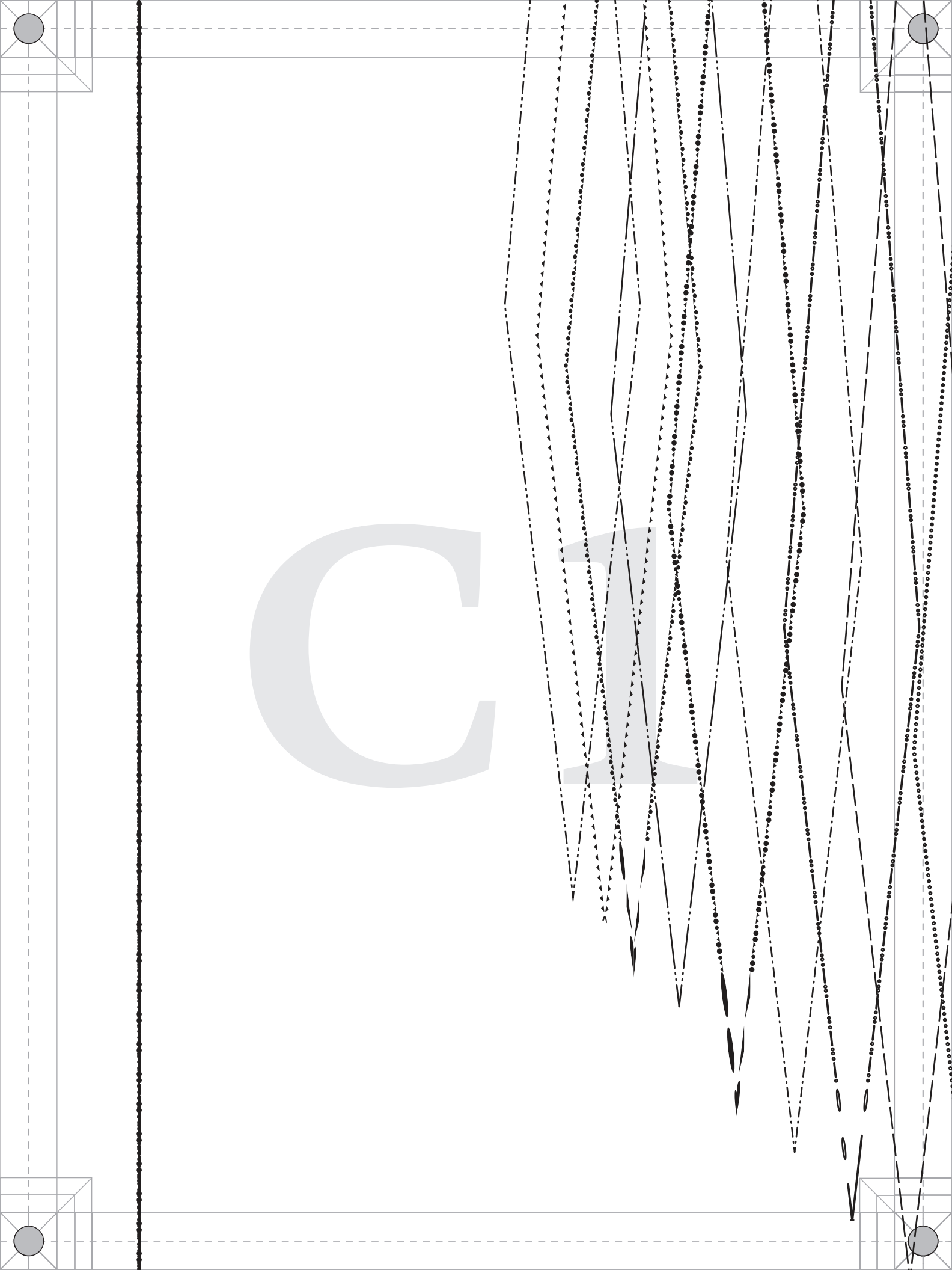

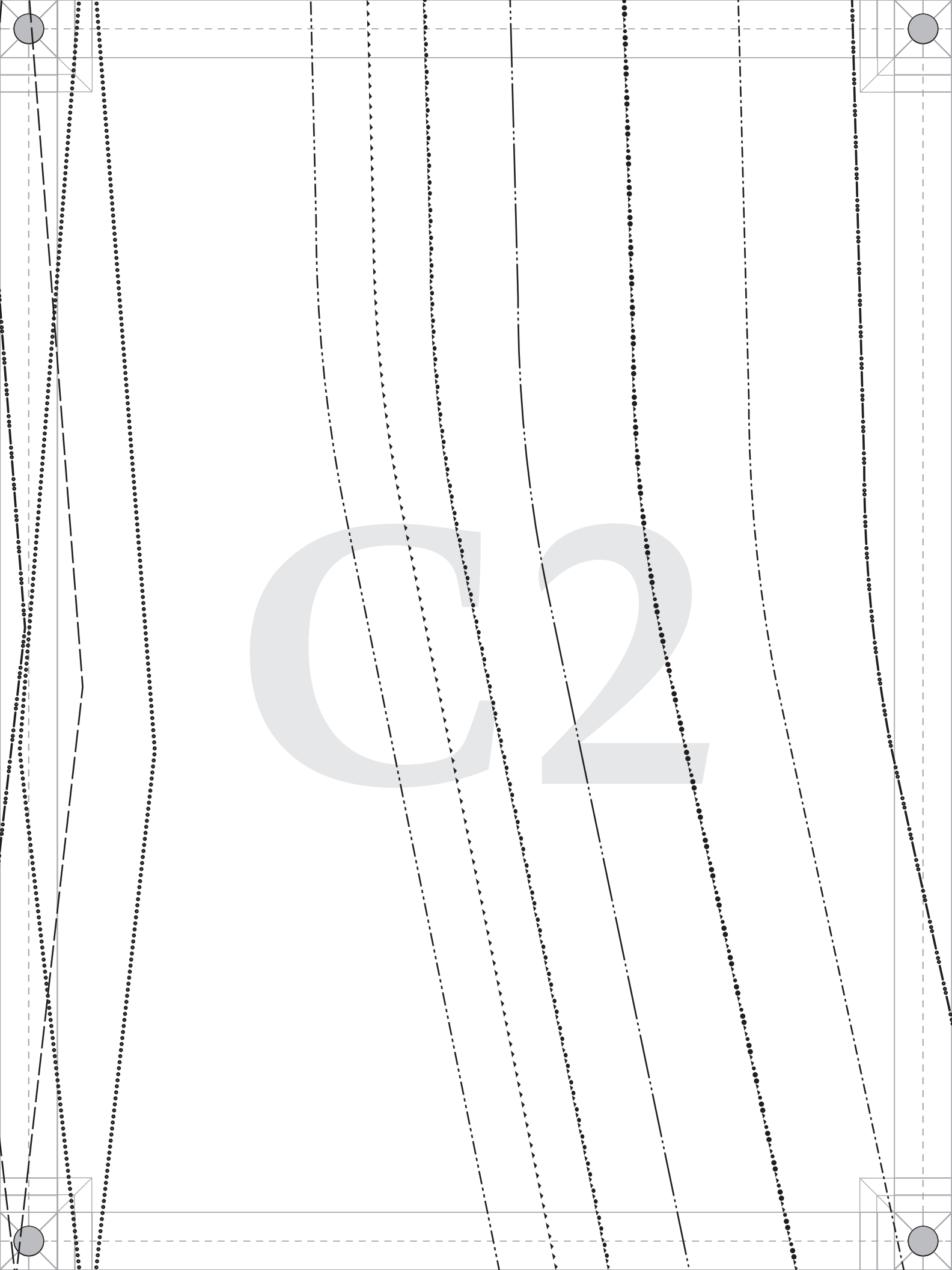
C2

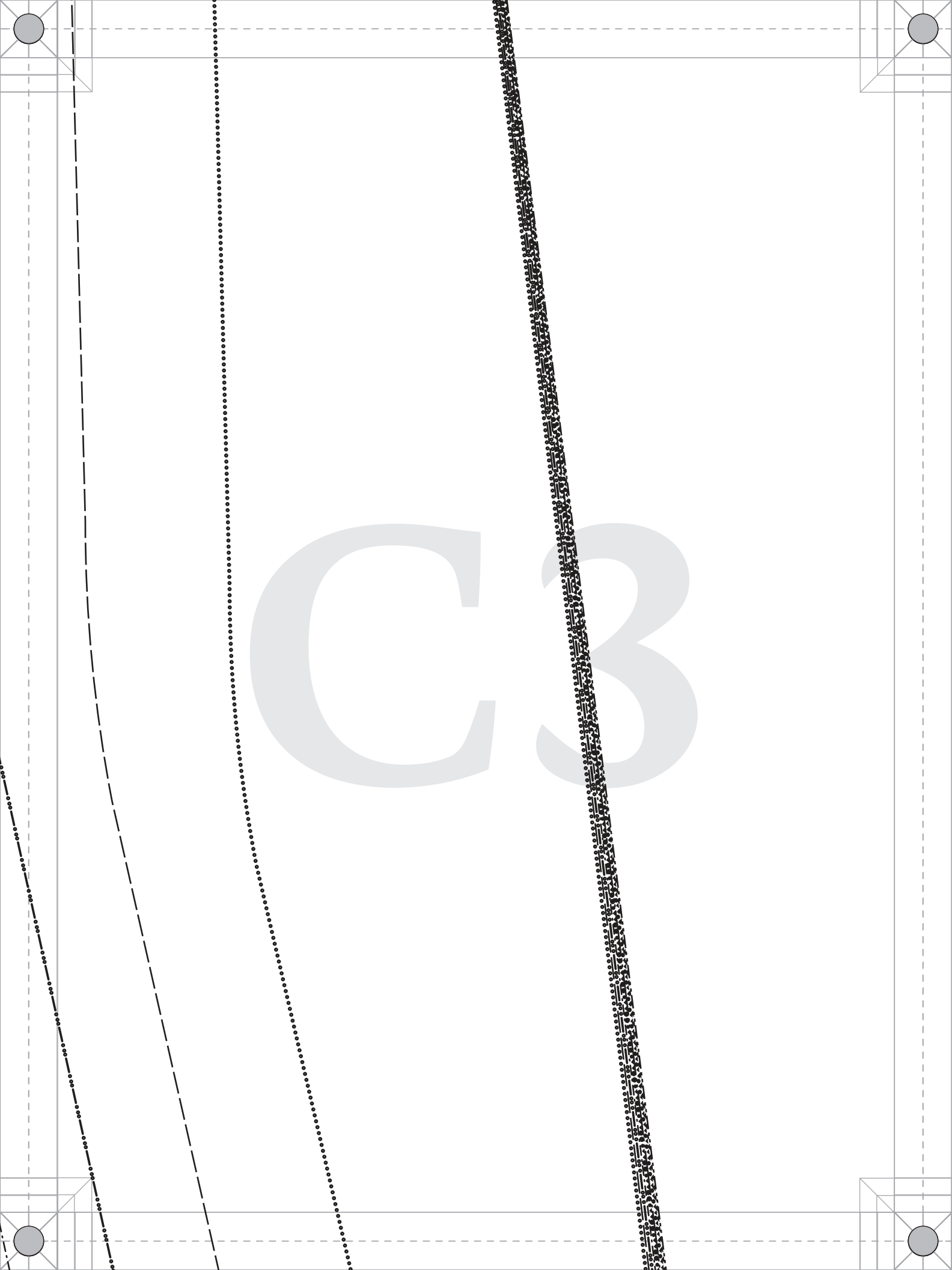
C3

C4

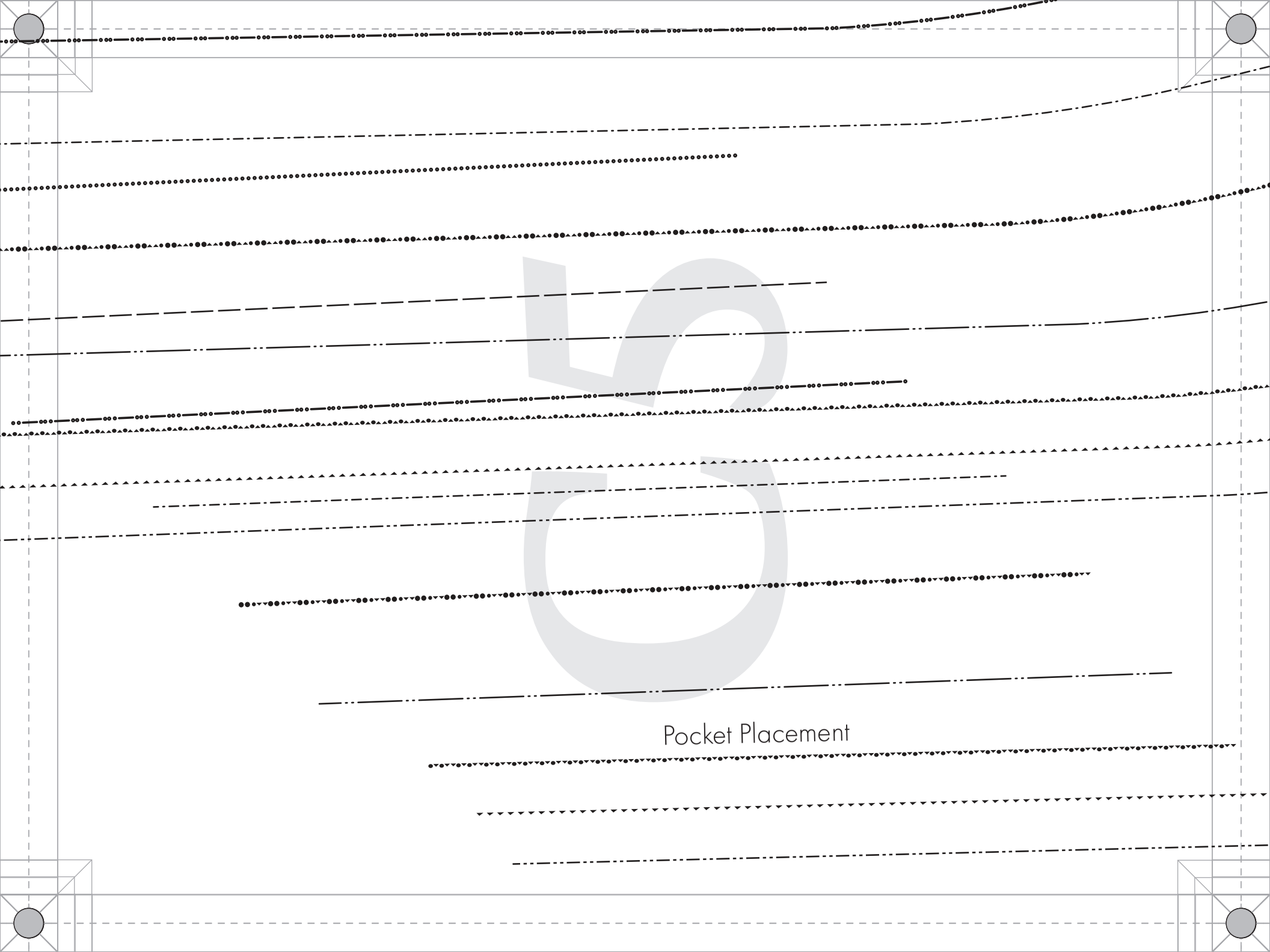
Pocket Placement

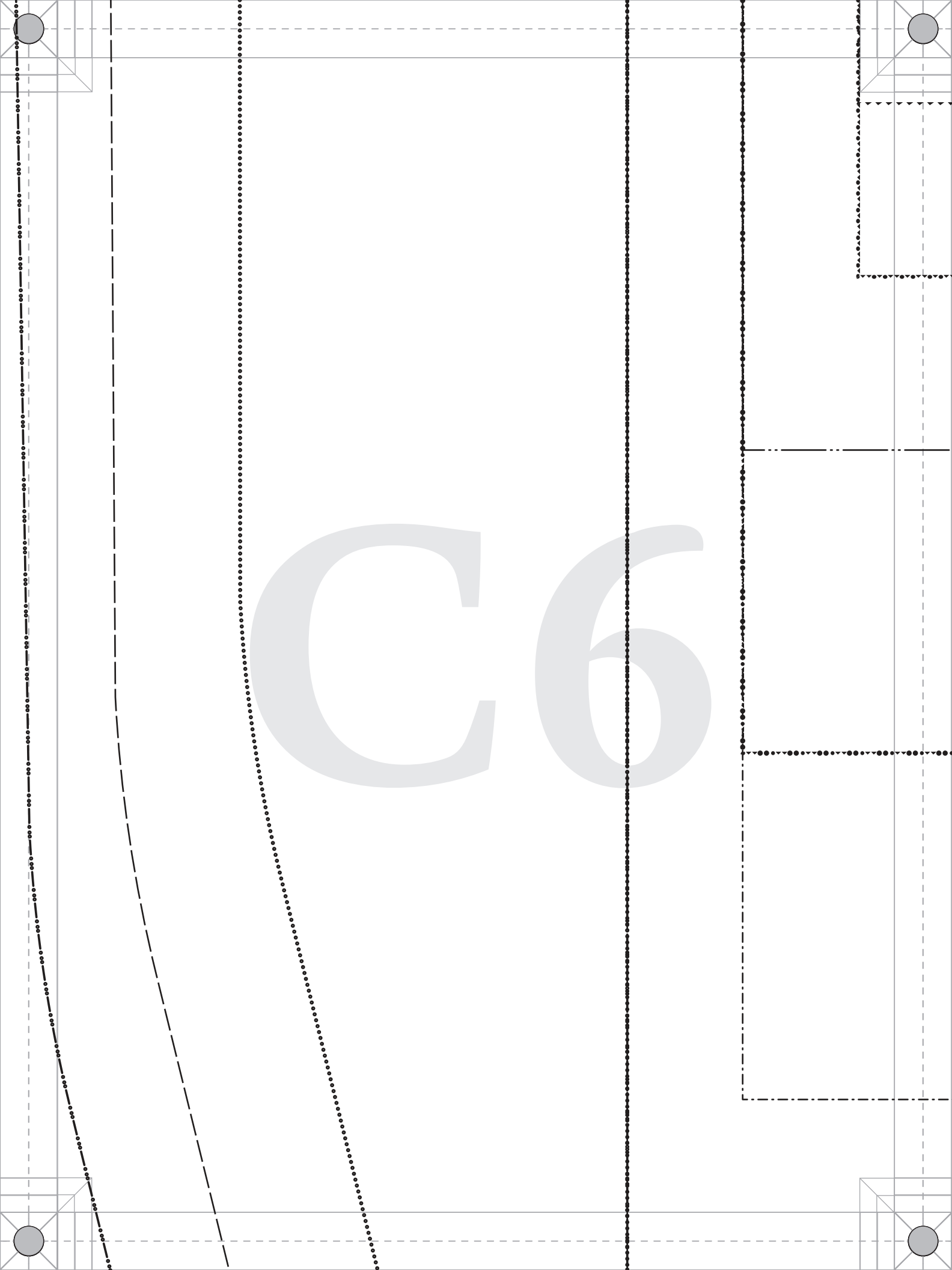
C6

C7

D1

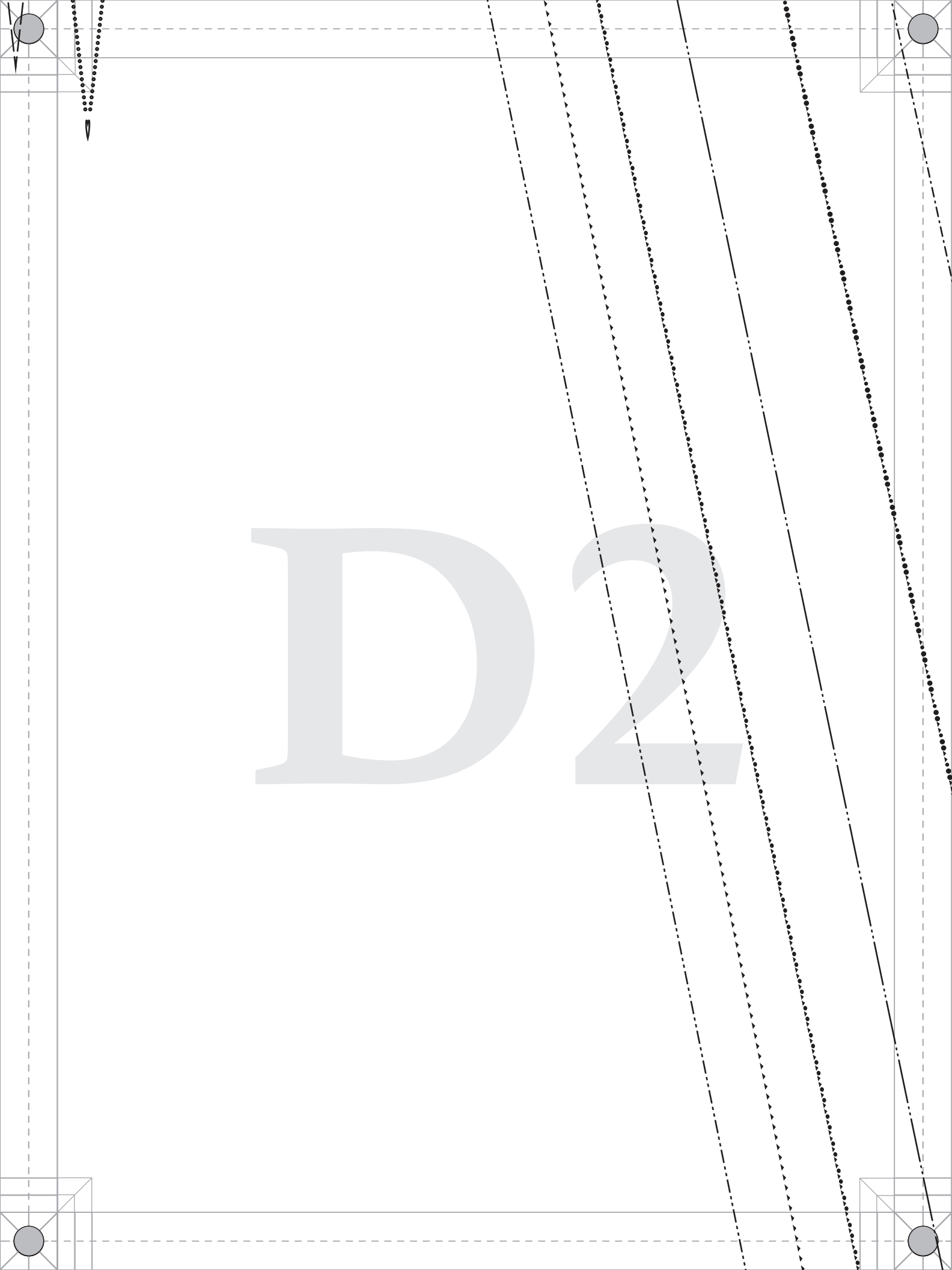
D2

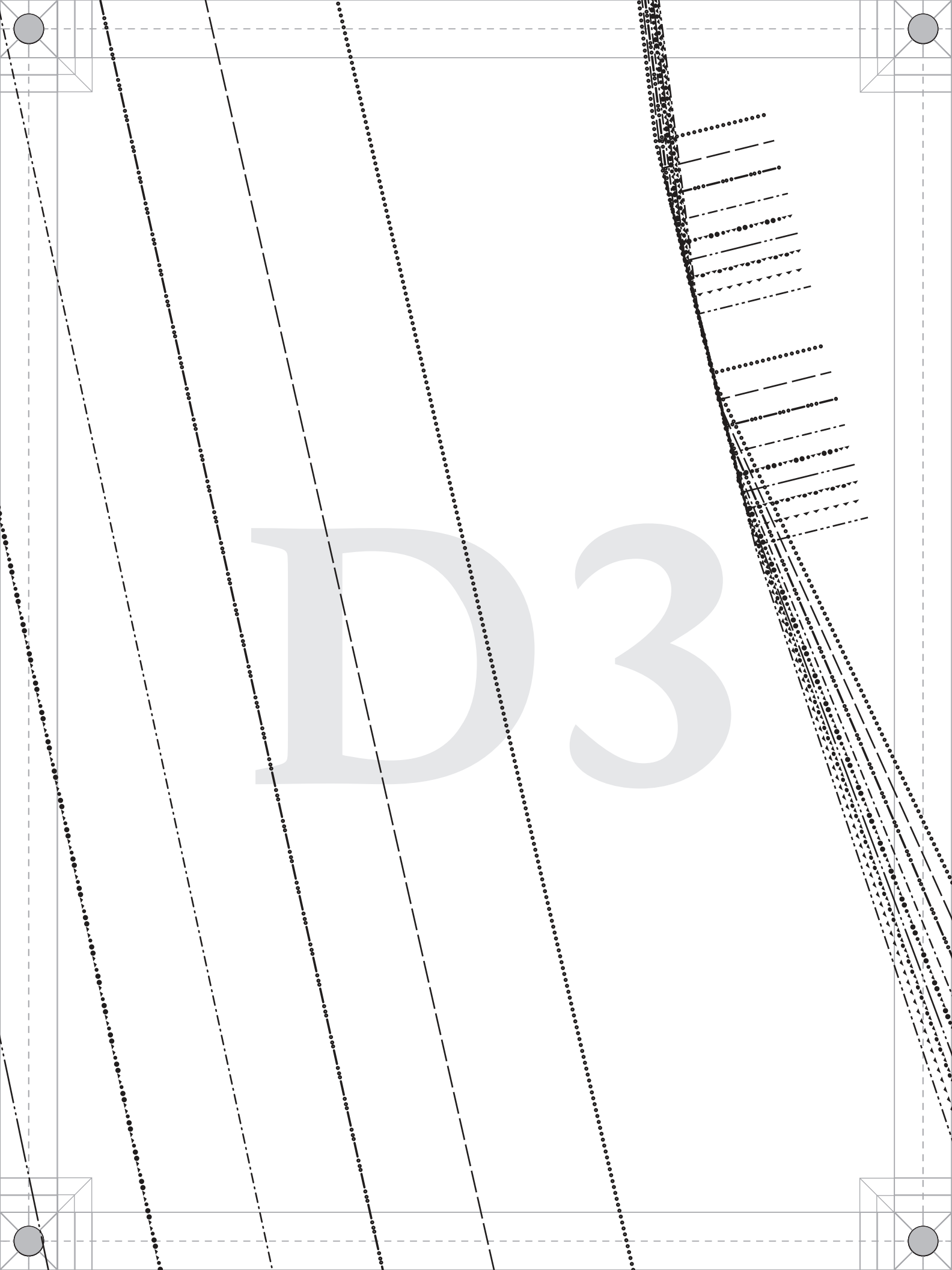
D3

PATTERNS BY mood FABRICS MDF551

#MoodEspressoPattern

"The Espresso Trench Vest" MDF551

C - FRONT

FABRIC: Cut 2 mirrored

Ladies Sizes XS to 5XL

1/2" seam allowances (SA's) included



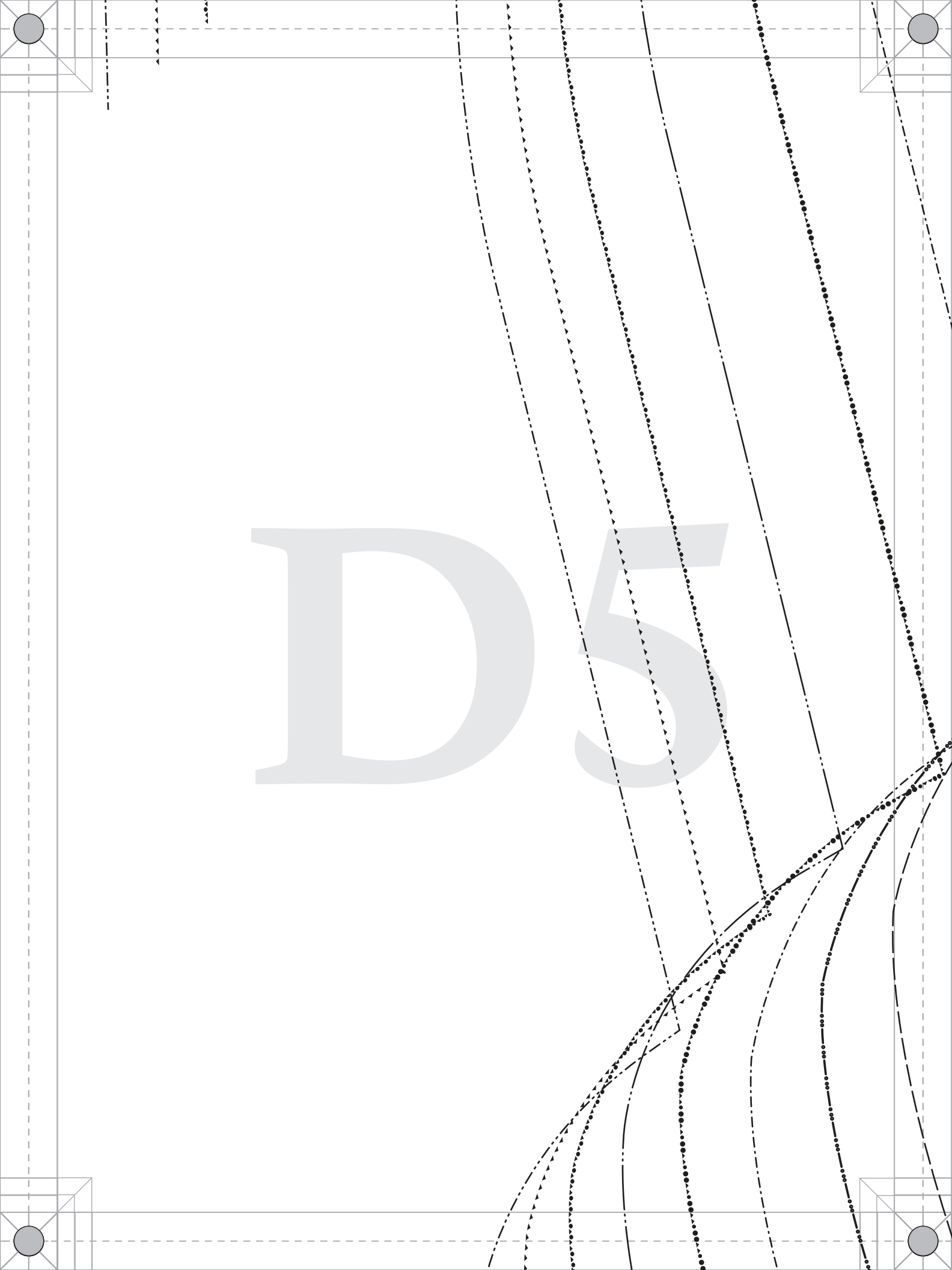
D5

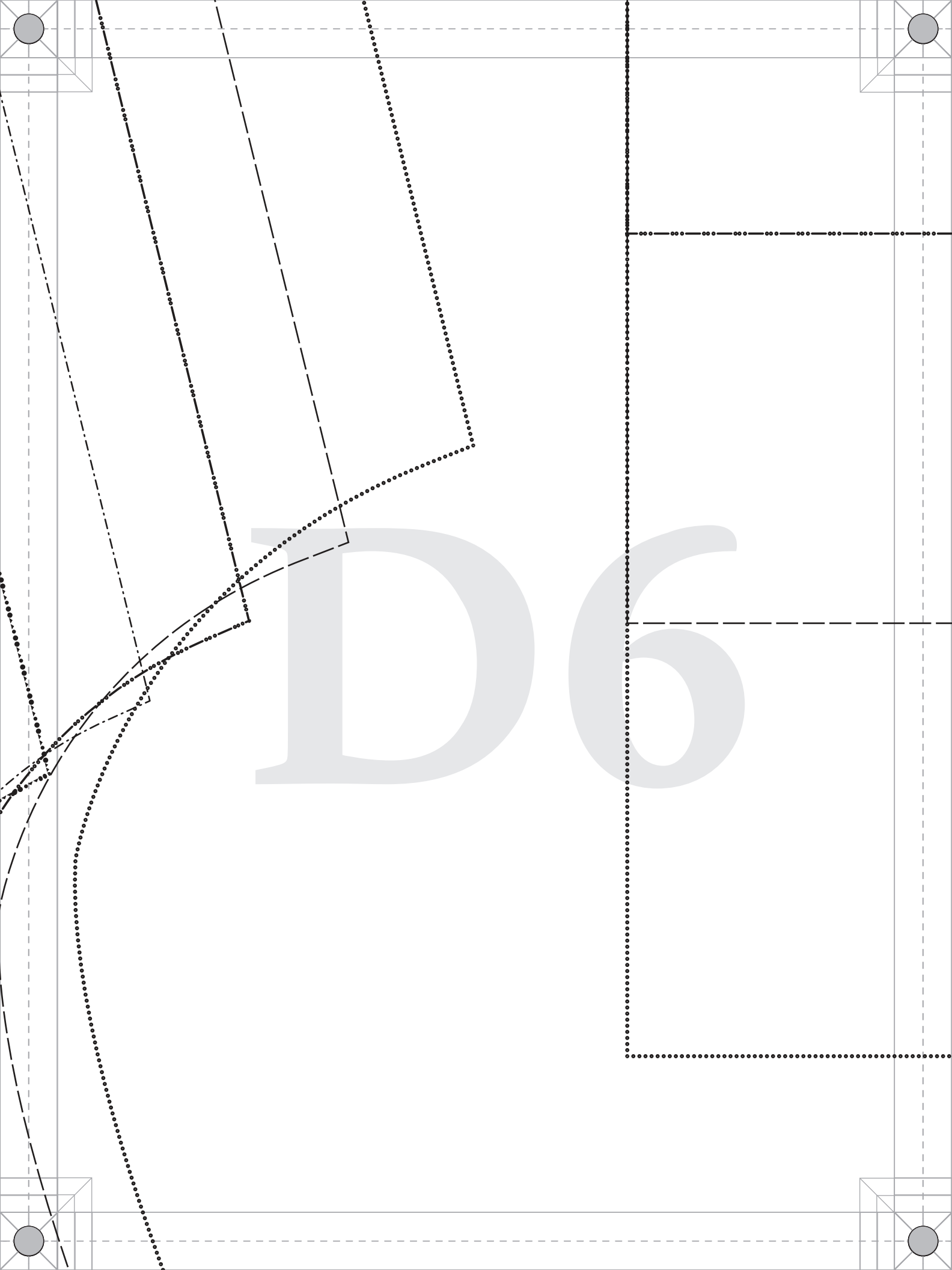
D6

D7

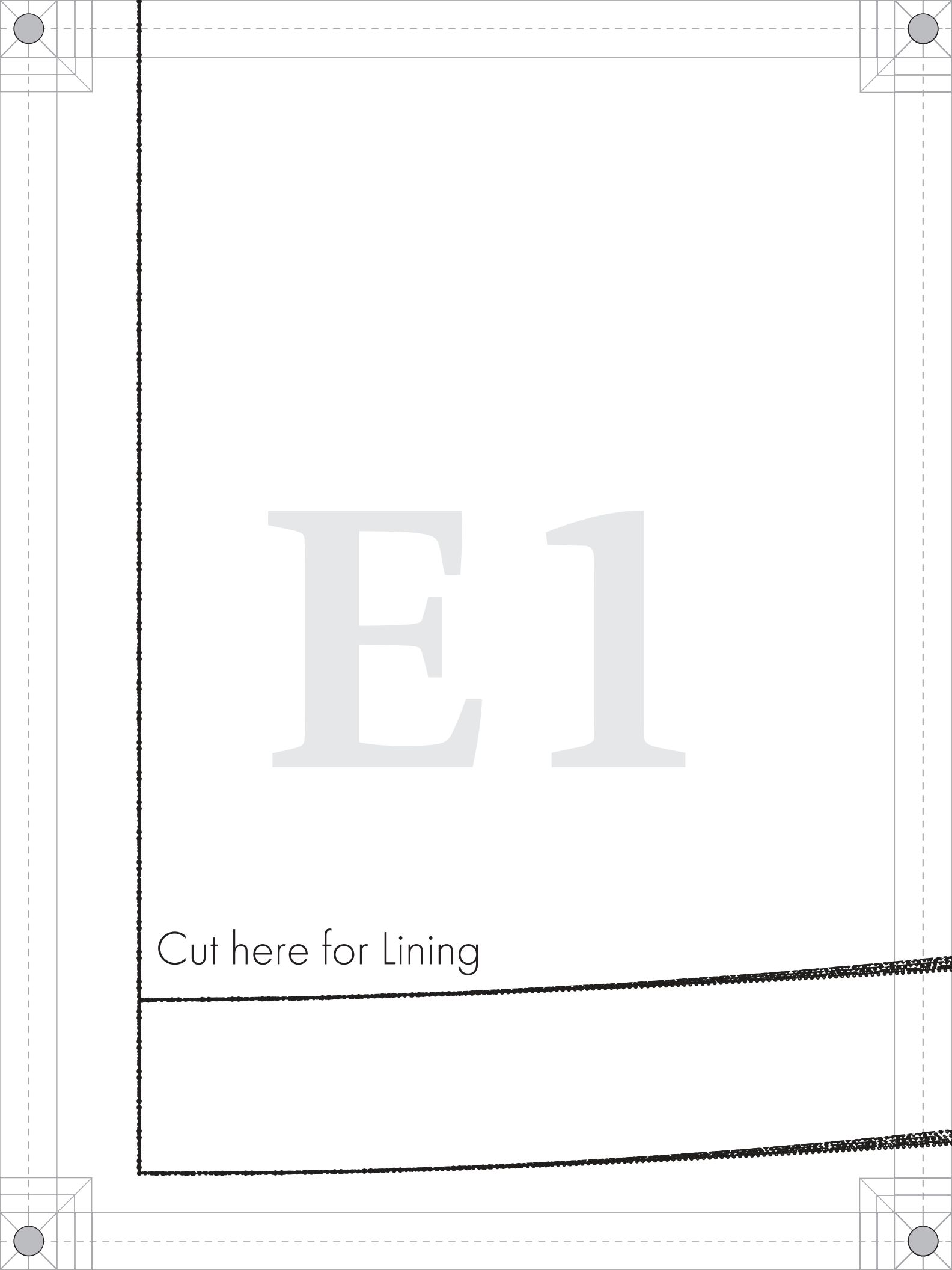
E1
Cut here for Lining

E2

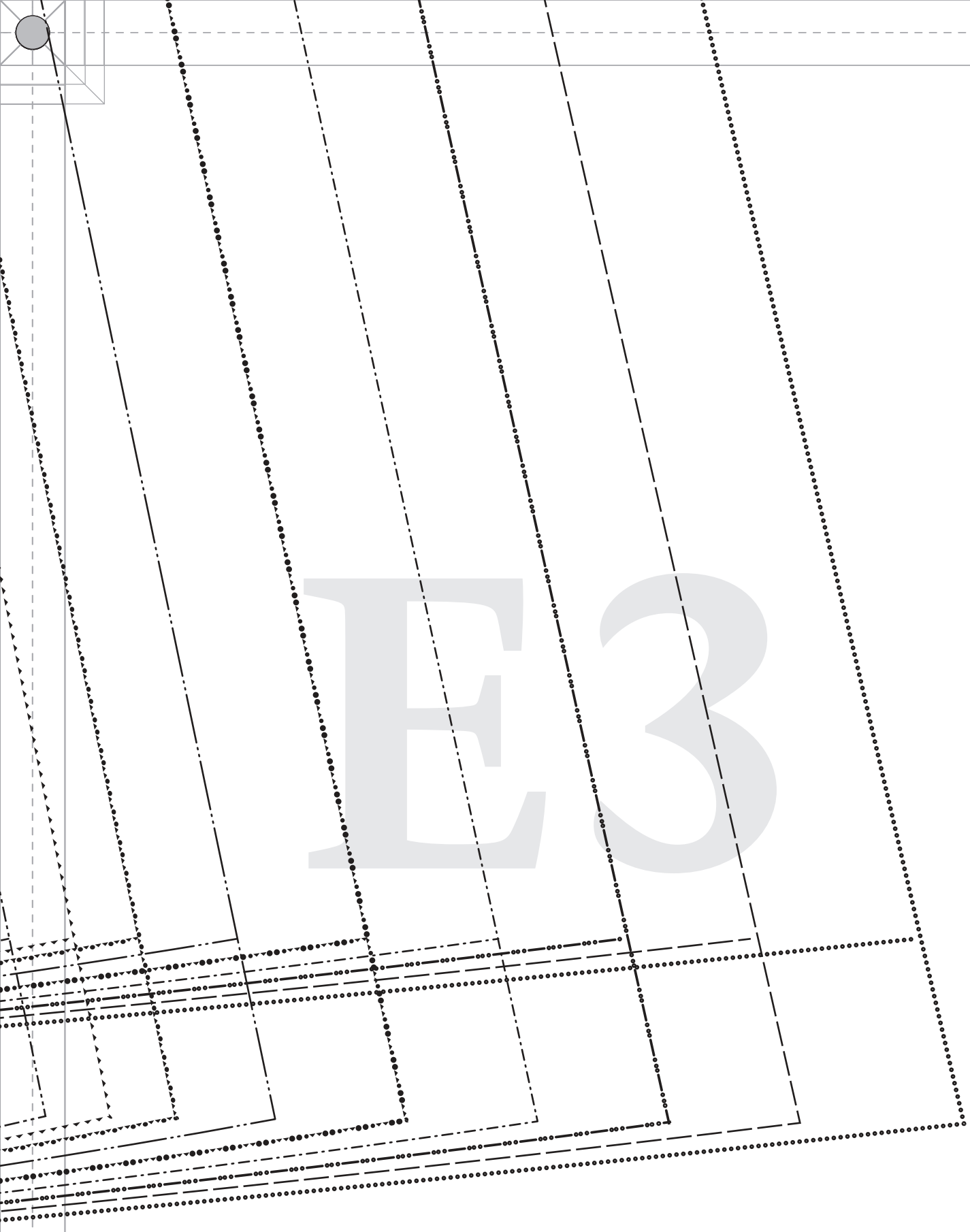

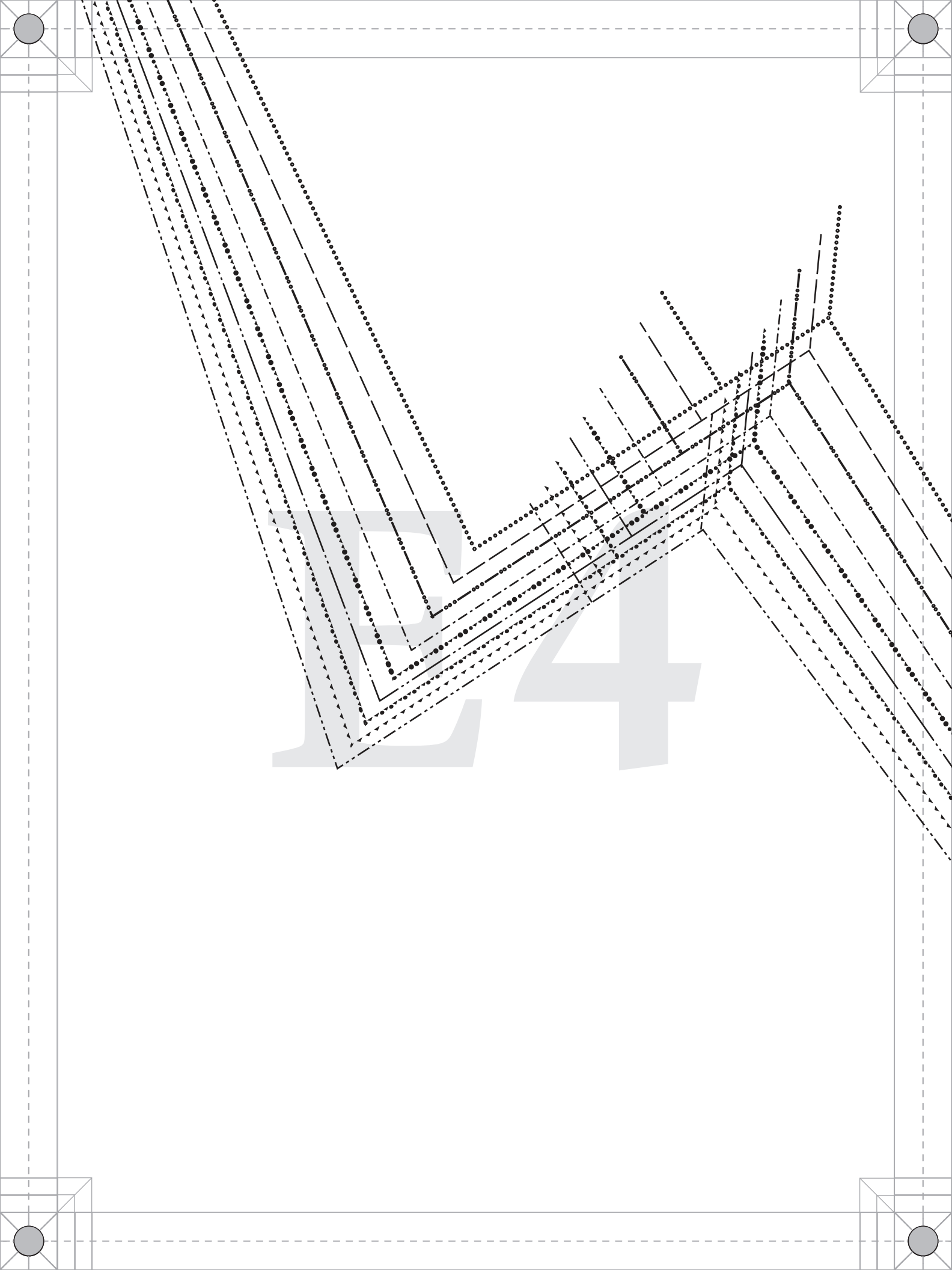
E4

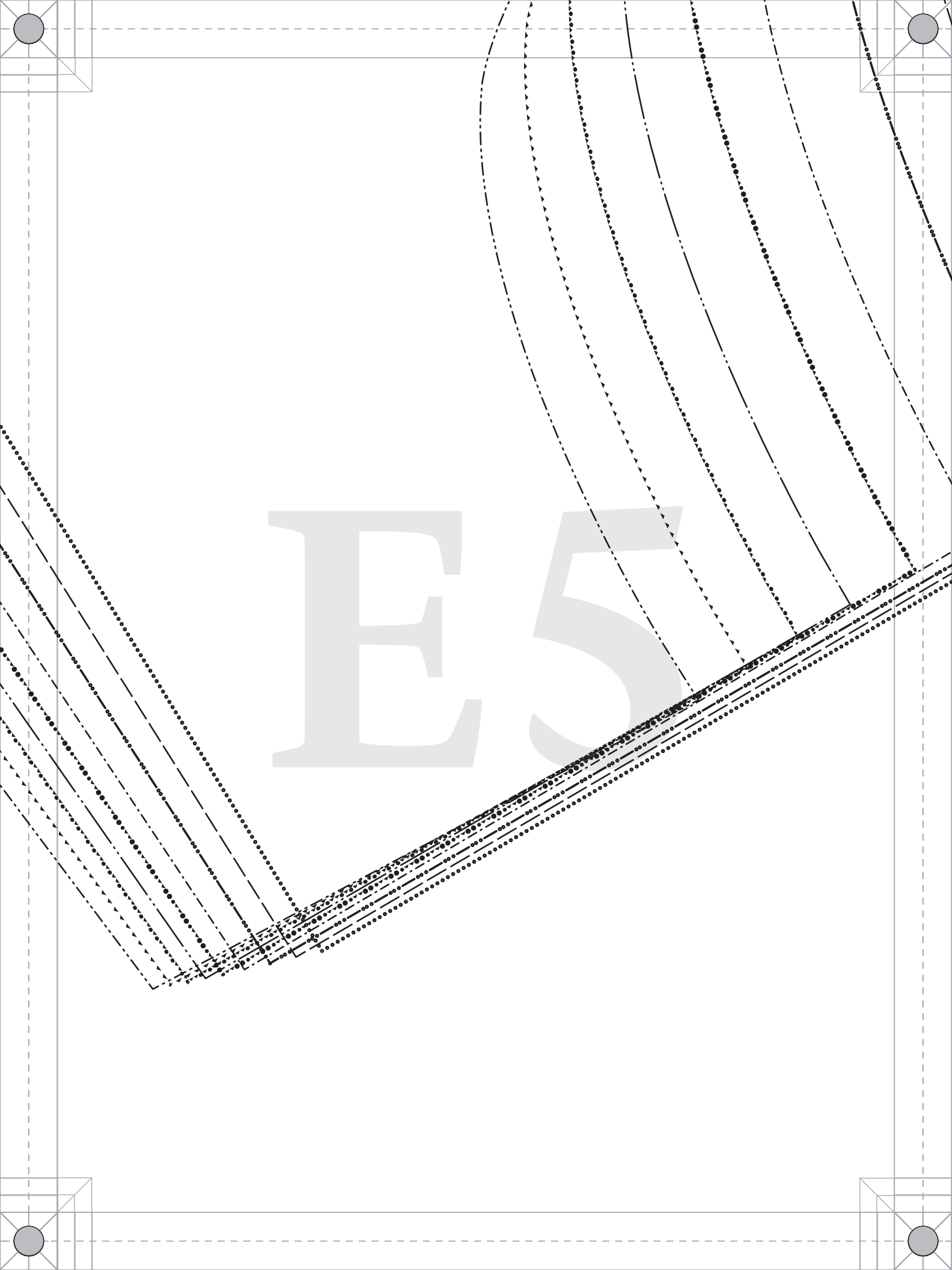
E5

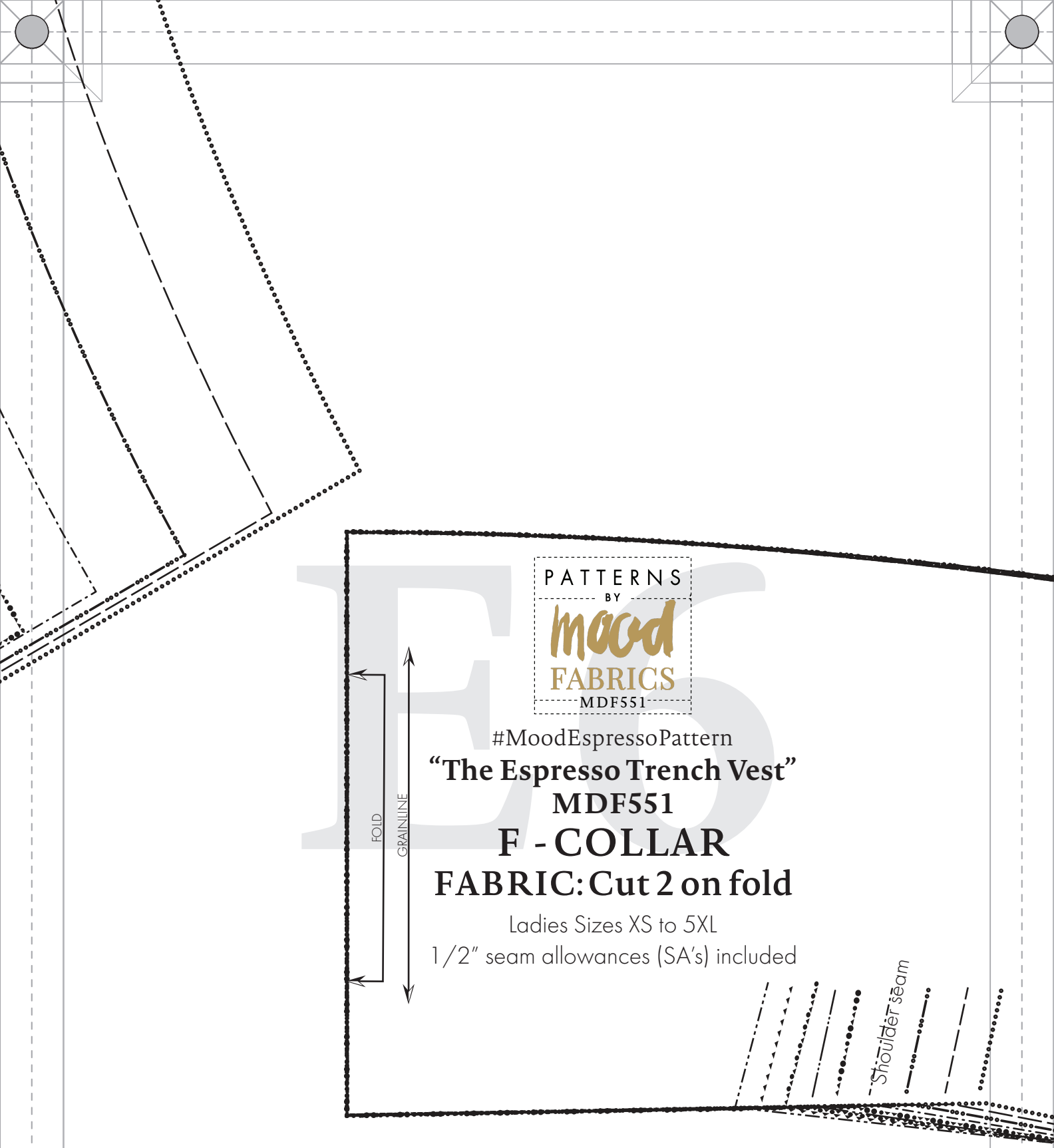

PATTERNS BY mood FABRICS MDF551

#MoodEspressoPattern

"The Espresso Trench Vest"

MDF551

F - COLLAR

FABRIC: Cut 2 on fold

Ladies Sizes XS to 5XL

1/2" seam allowances (SA's) included

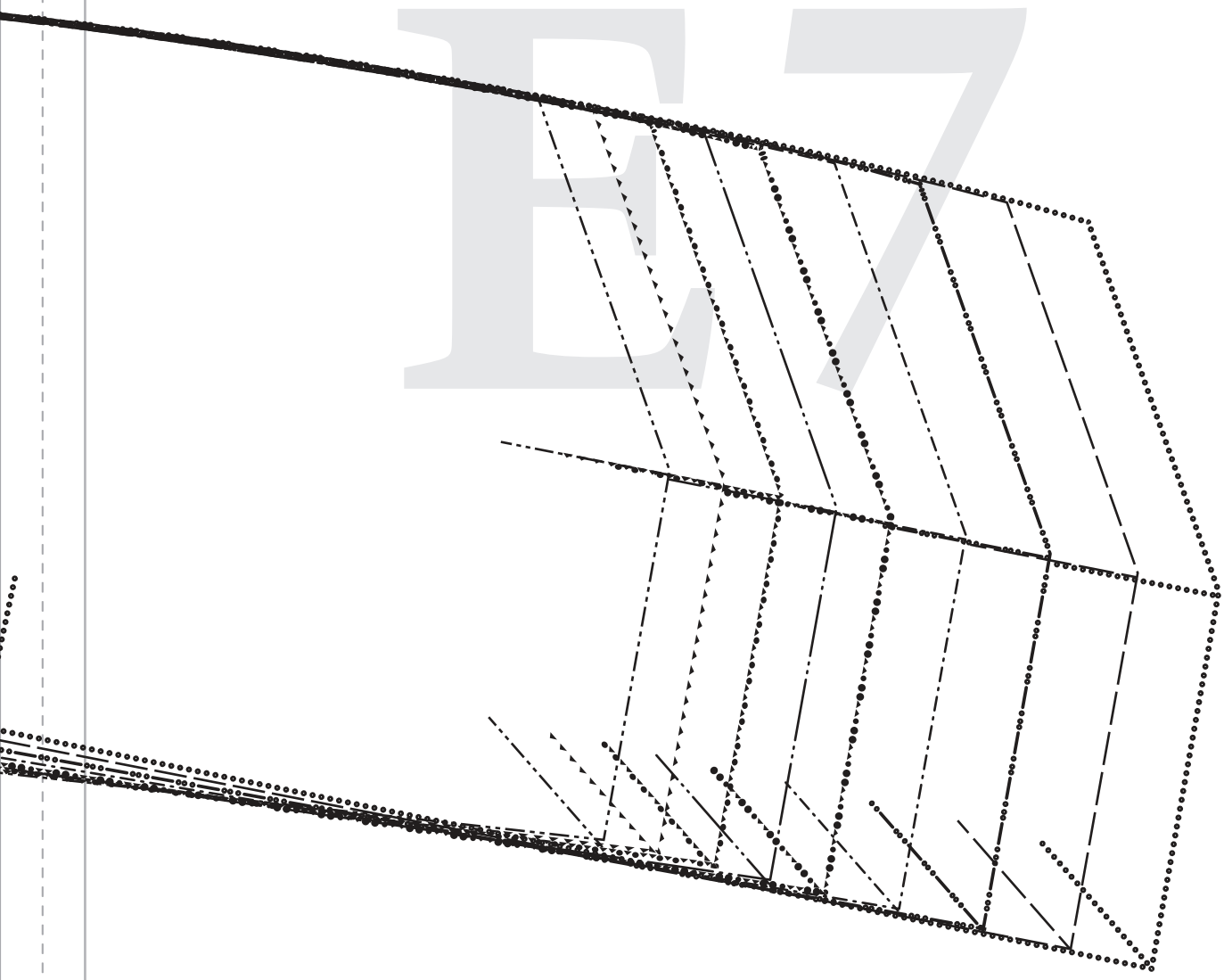

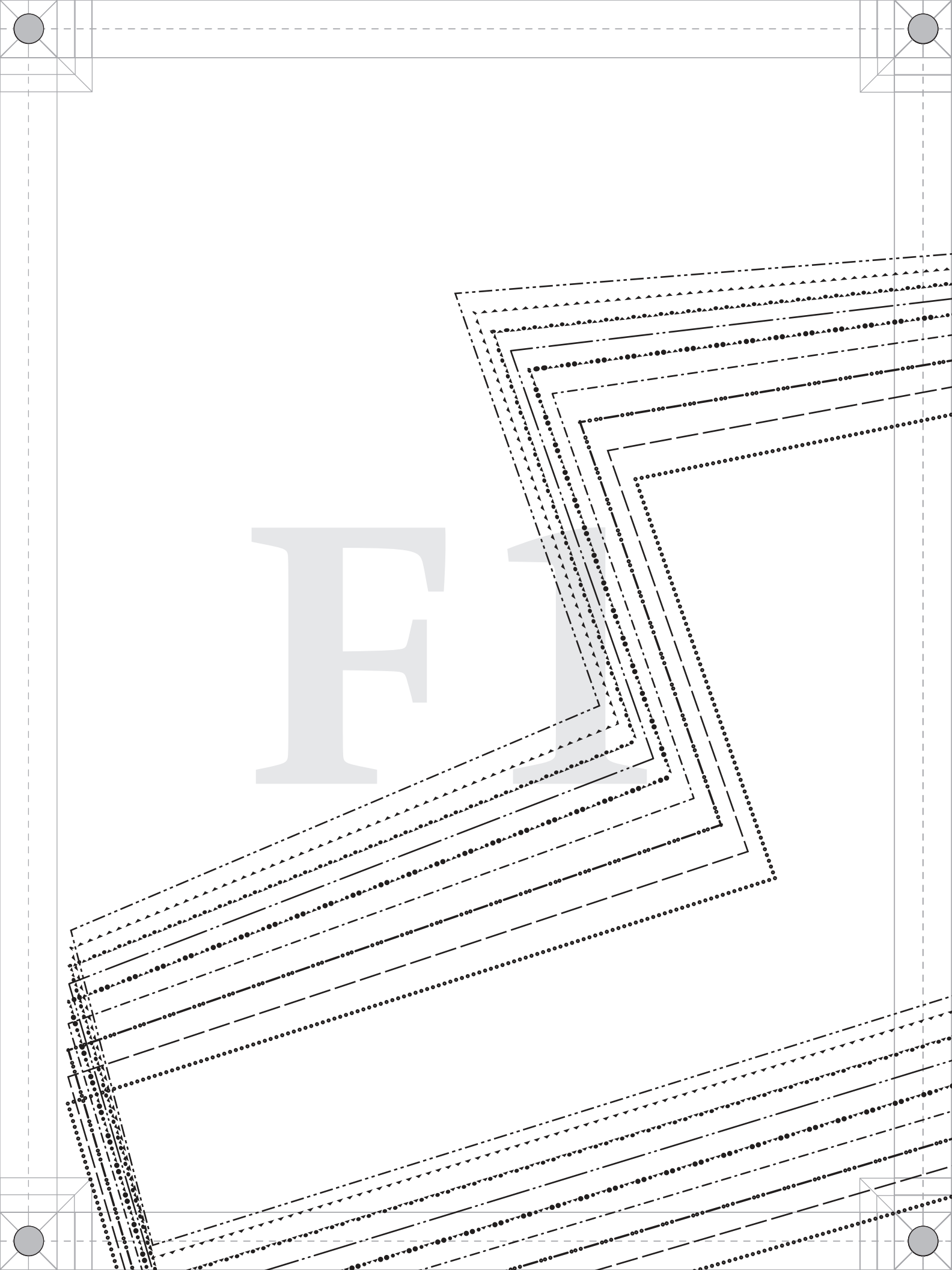

PATTERNS BY mood FABRICS MDF551

#MoodEspressoPattern

"The Espresso Trench Vest" MDF551

E - FRONT FACING

FABRIC: Cut 2 mirrored

Ladies Sizes XS to 5XL

1/2" seam allowances (SA's) included

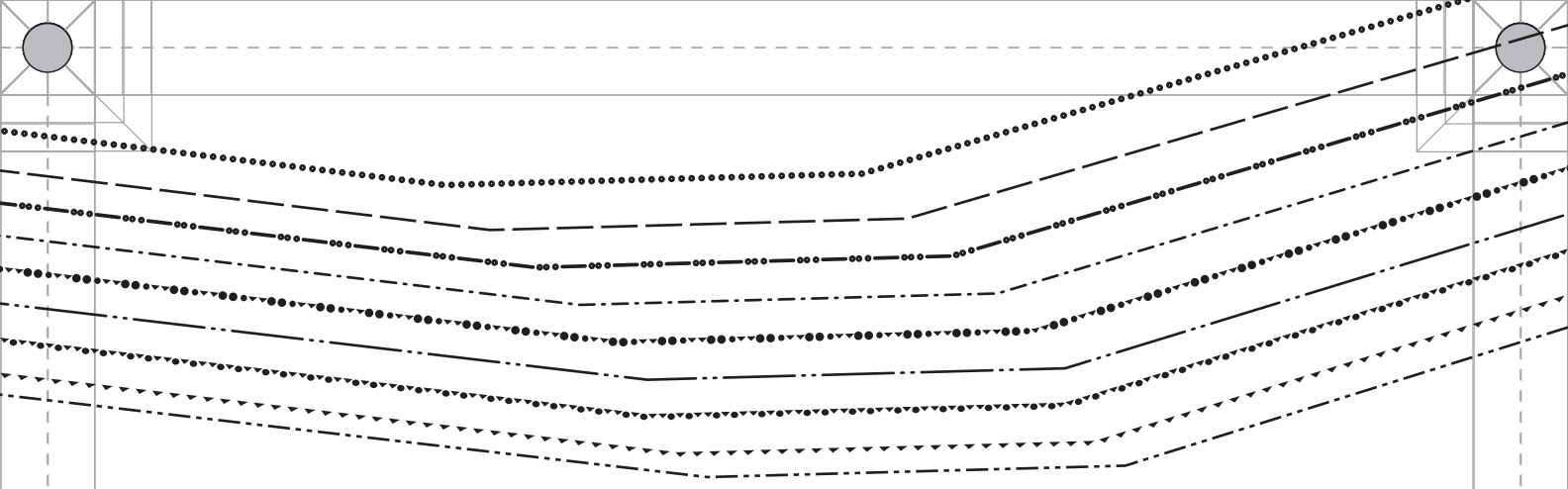

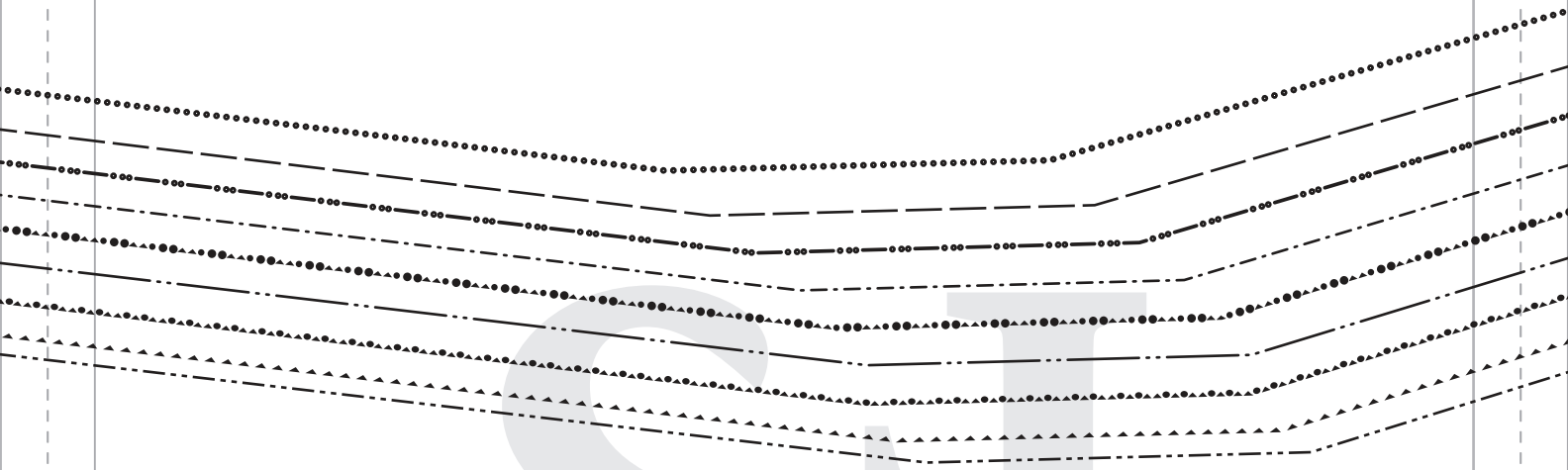

GRAINLINE



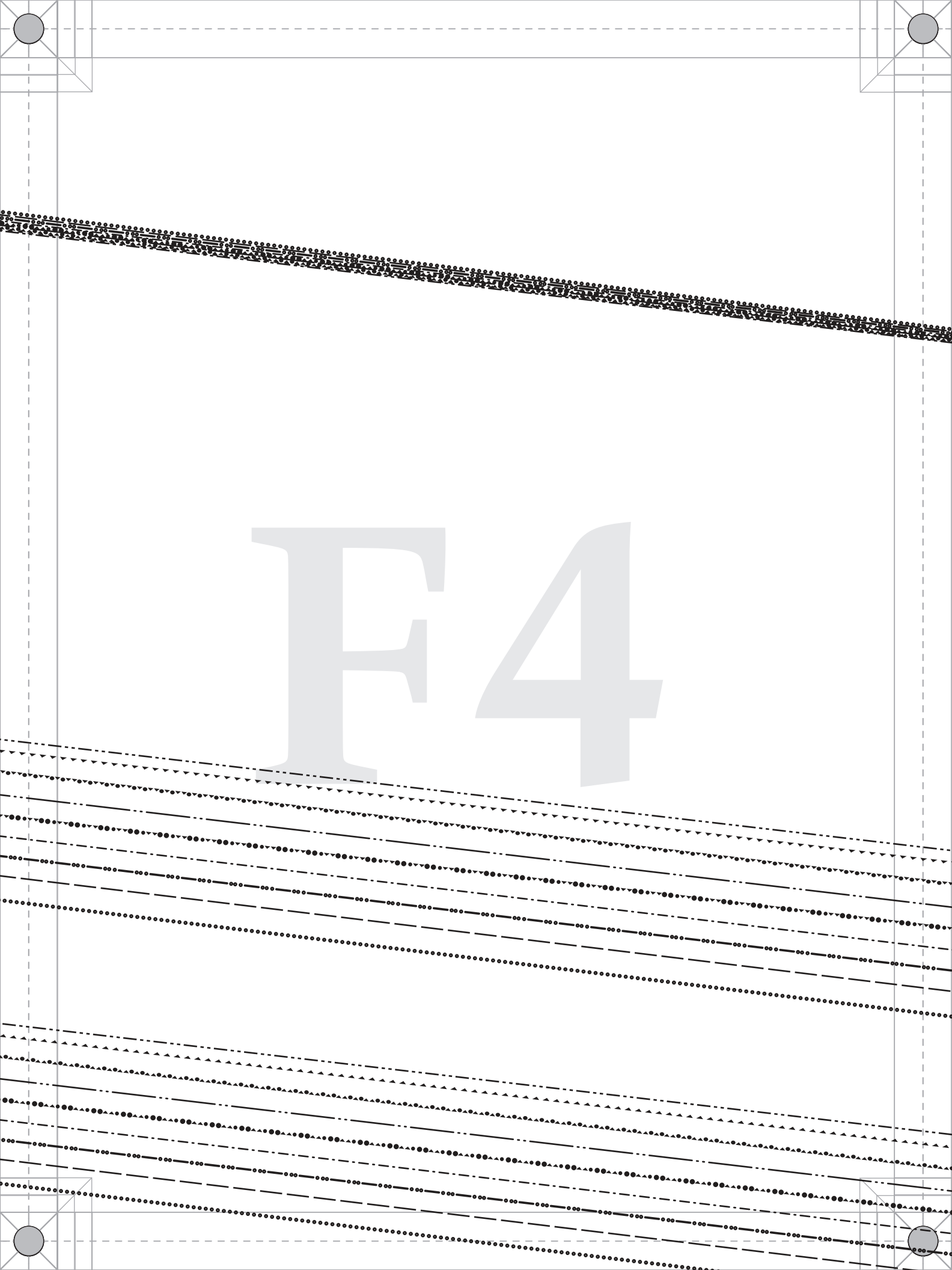
F4

F5

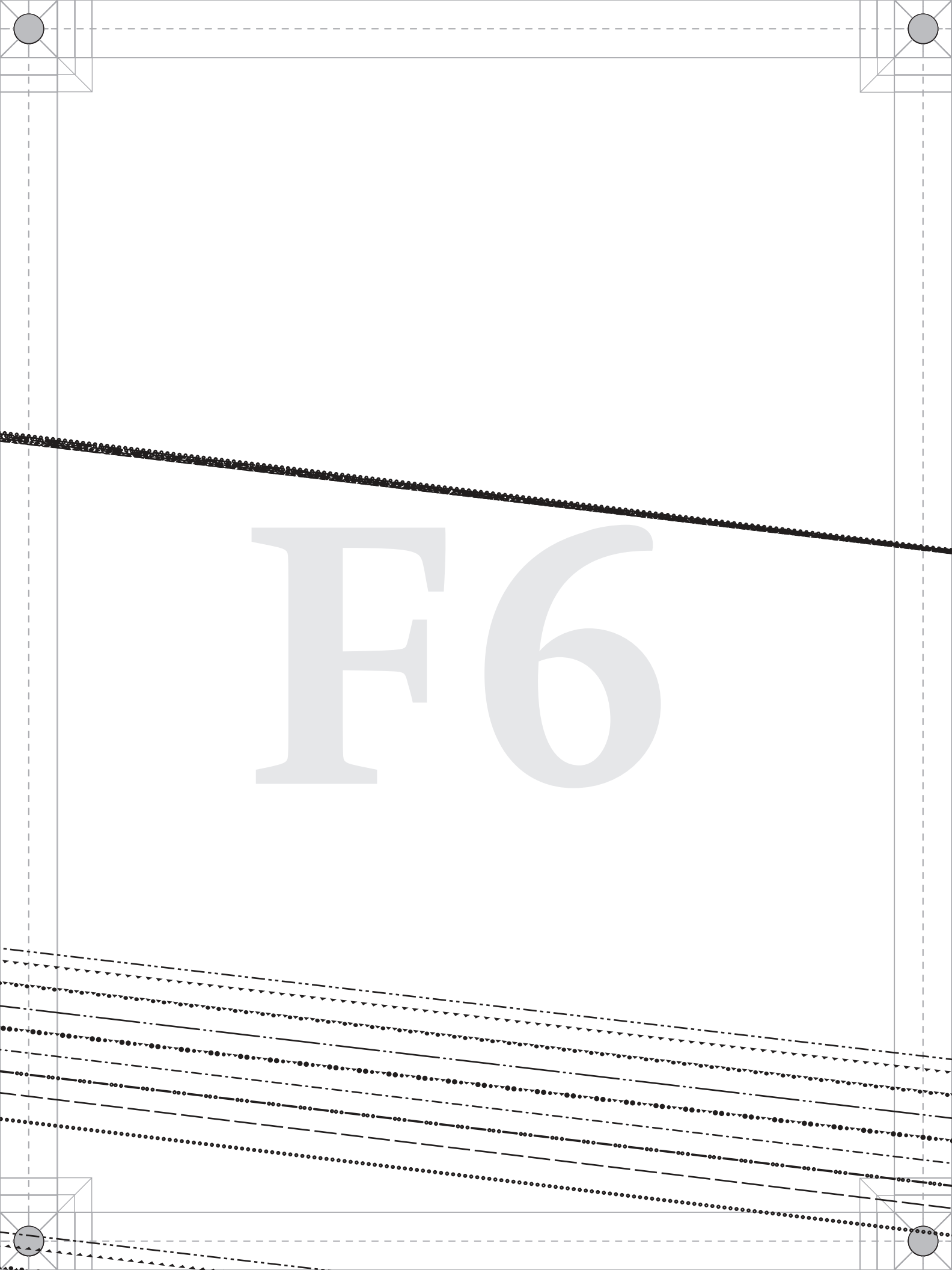
F6

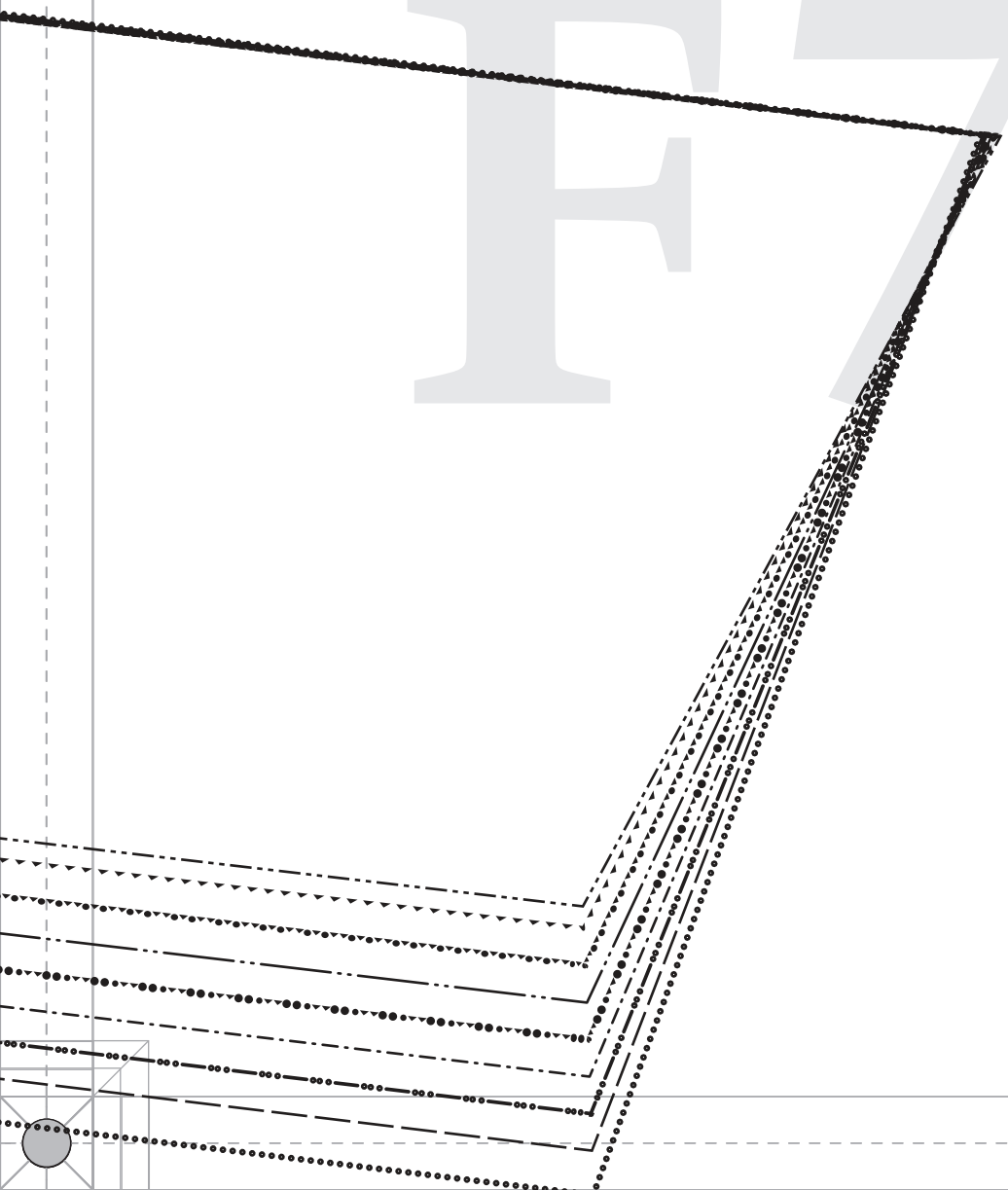

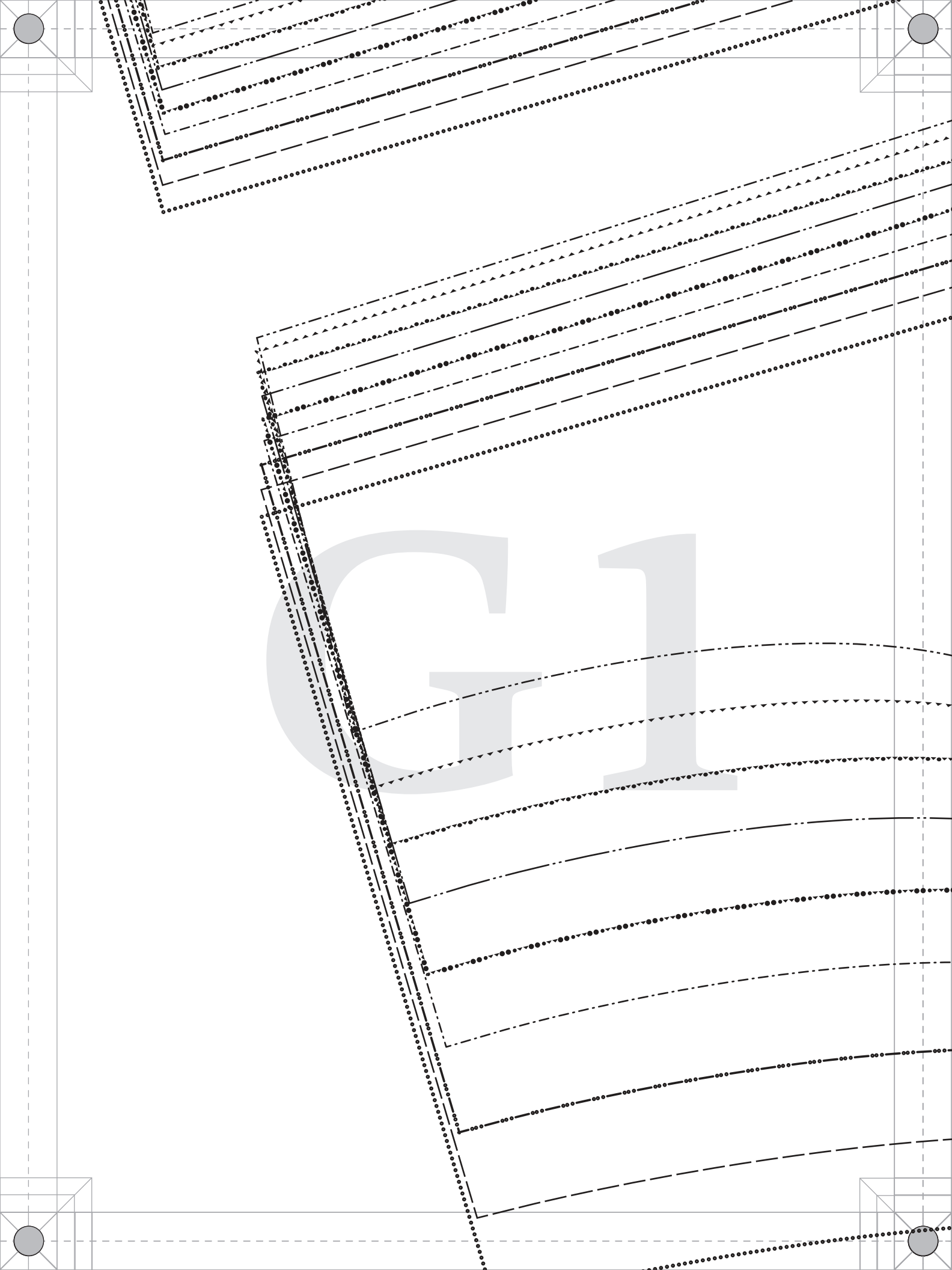
G1

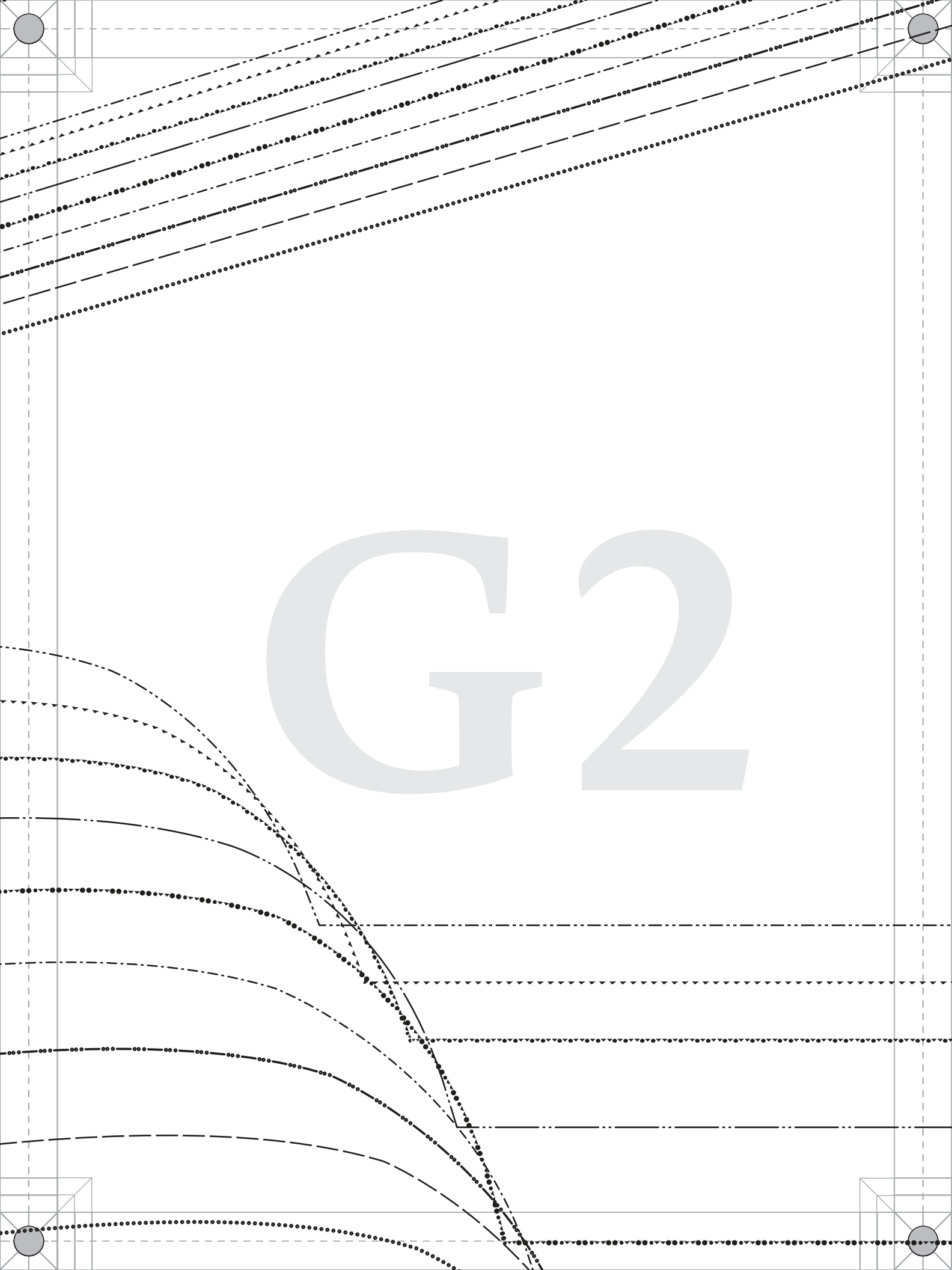
G2

PATTERNS BY mood FABRICS MDF551

#MoodEspressoPattern

"The Espresso Trench Vest" MDF551

D - FRONT LINING

LINING: Cut 2 mirrored

Ladies Sizes XS to 5XL

1/2" seam allowances (SA's) included



G4

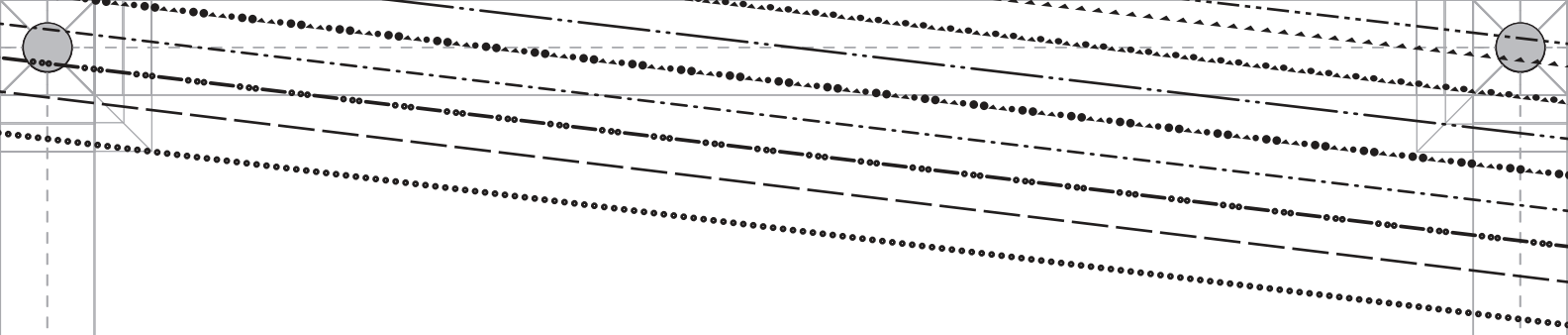

G5

G6

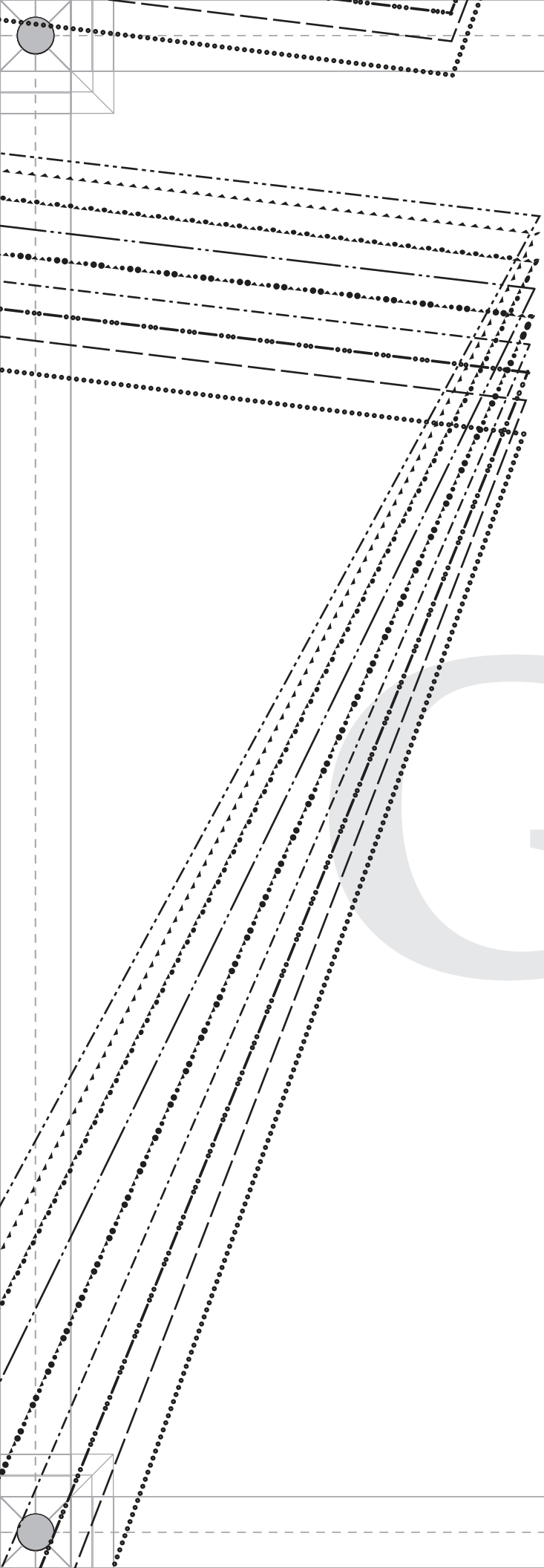

G7

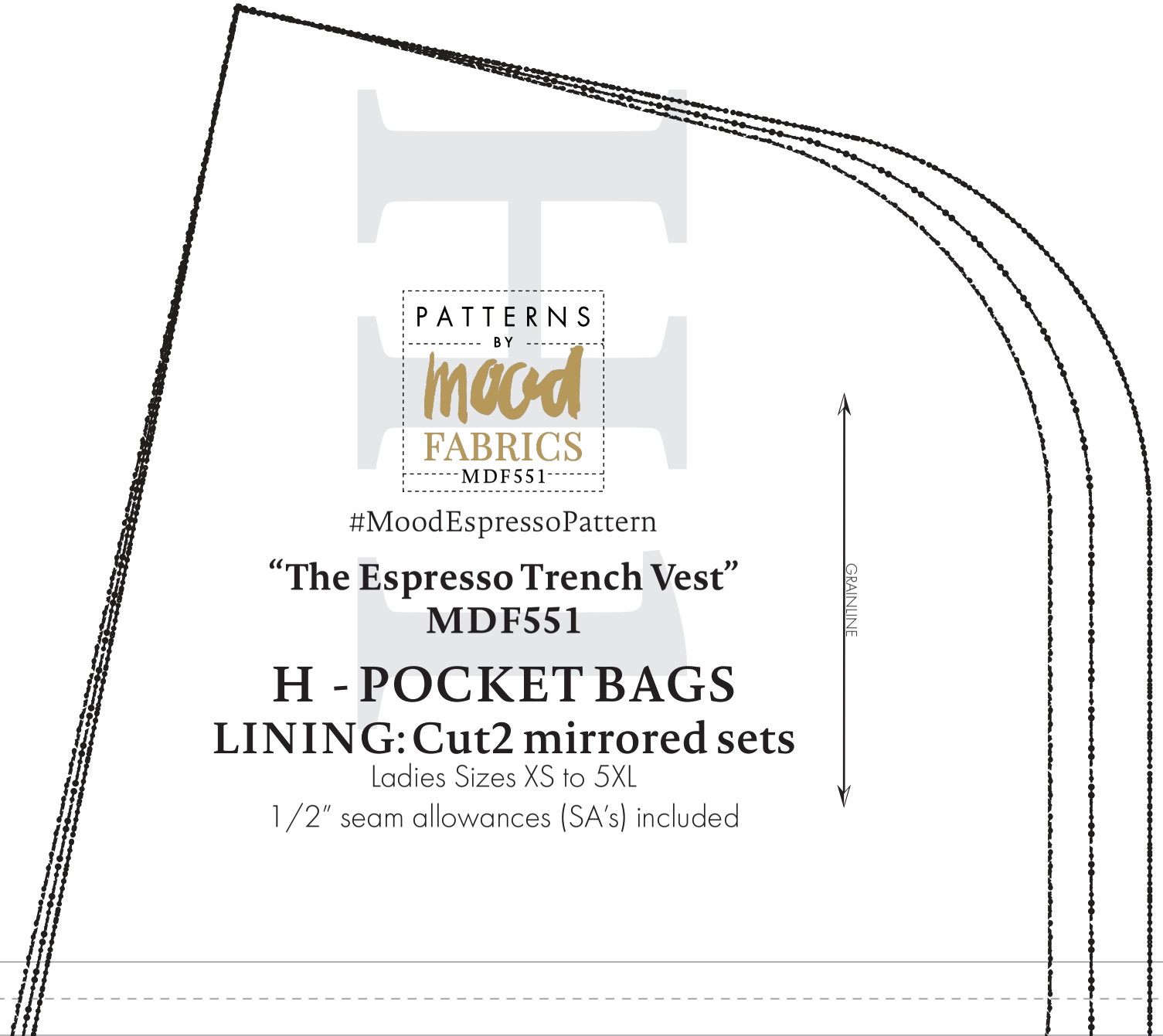

PATTERNS BY mood FABRICS
MDF551

#MoodEspressoPattern

"The Espresso Trench Vest"
MDF551

H - POCKET BAGS
LINING: Cut2 mirrored sets

Ladies Sizes XS to 5XL

1/2" seam allowances (SA's) included

GRAINLINE

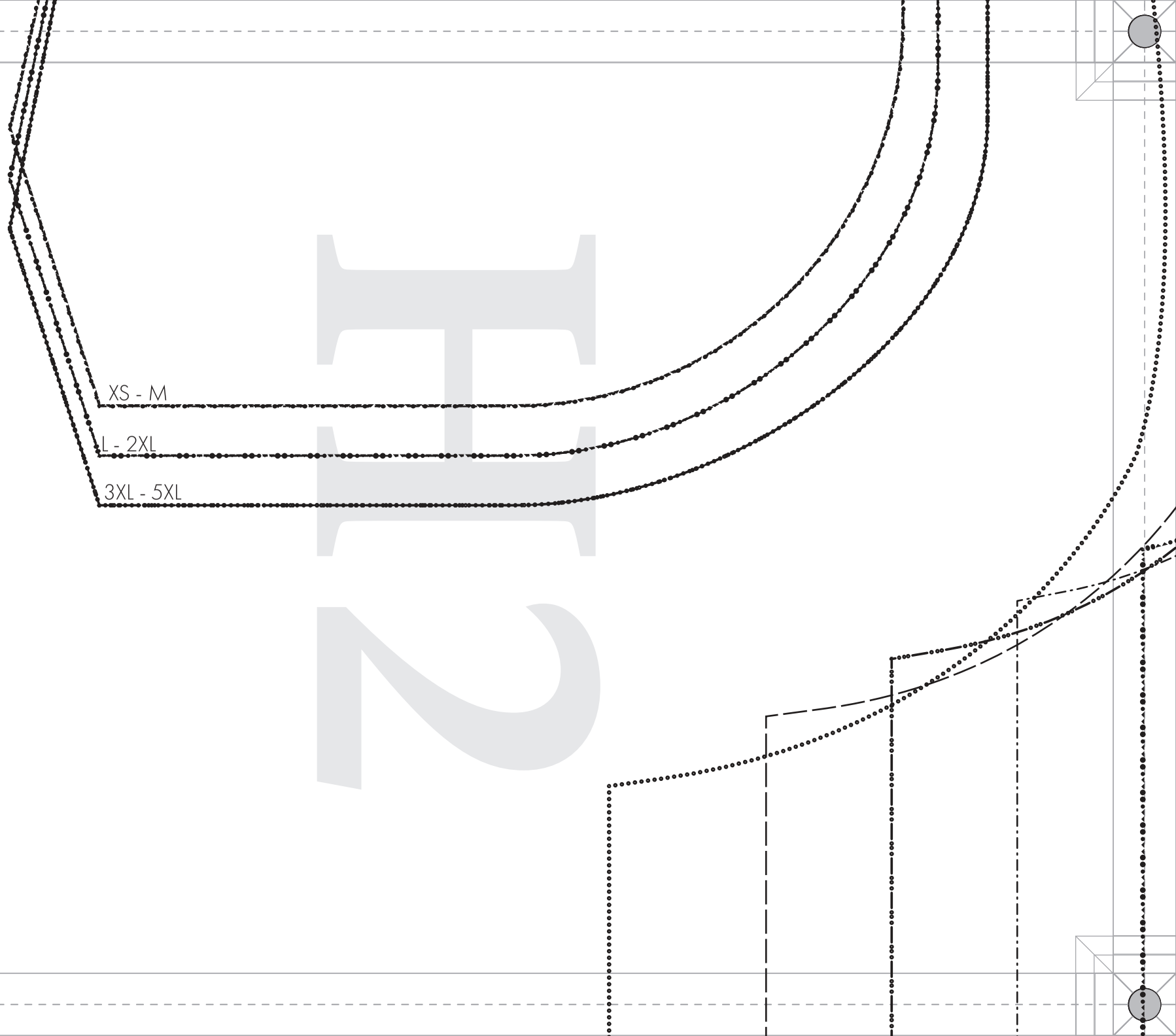
XS - M
L - 2XL
3XL - 5XL

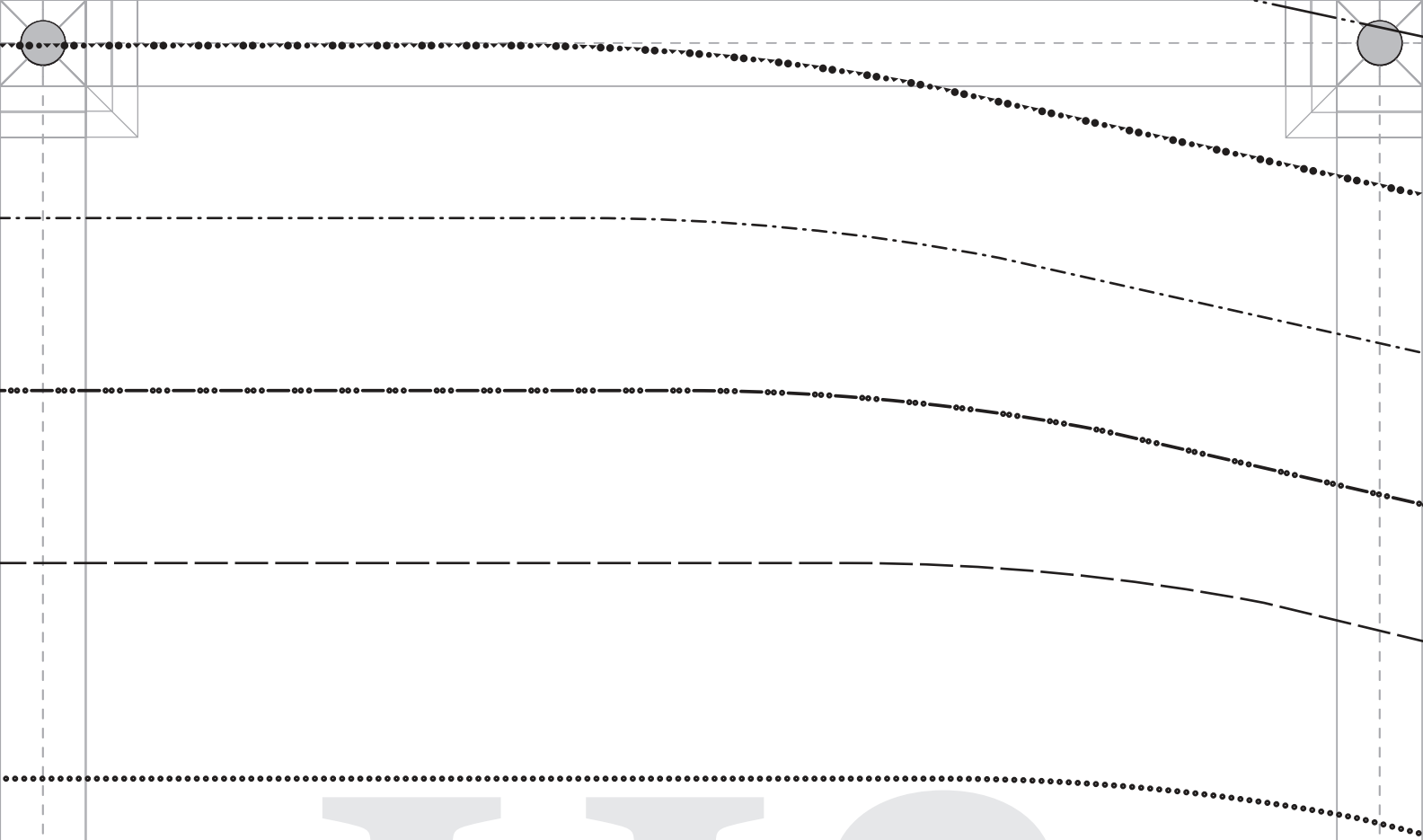
H3

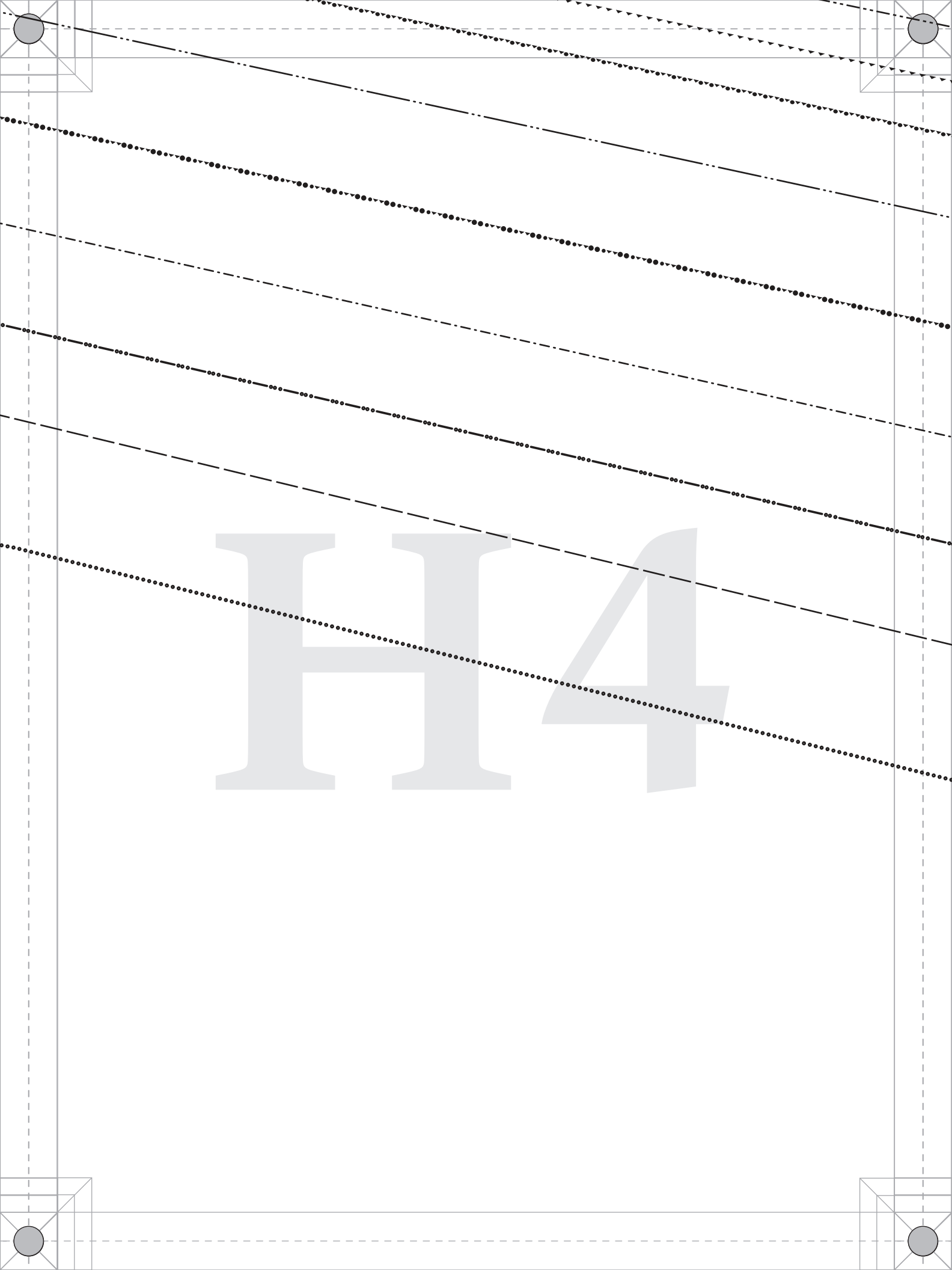
H4

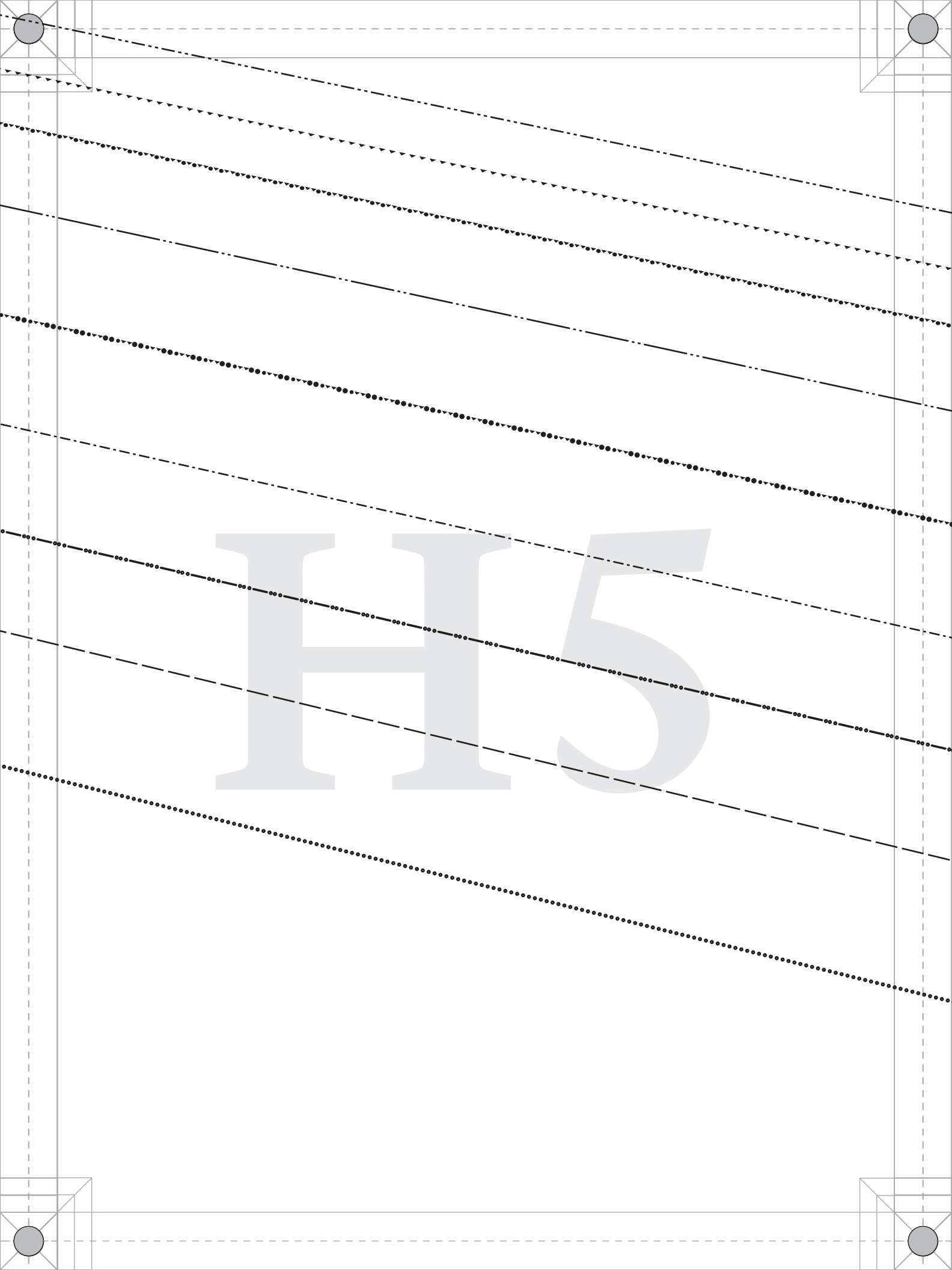
H5

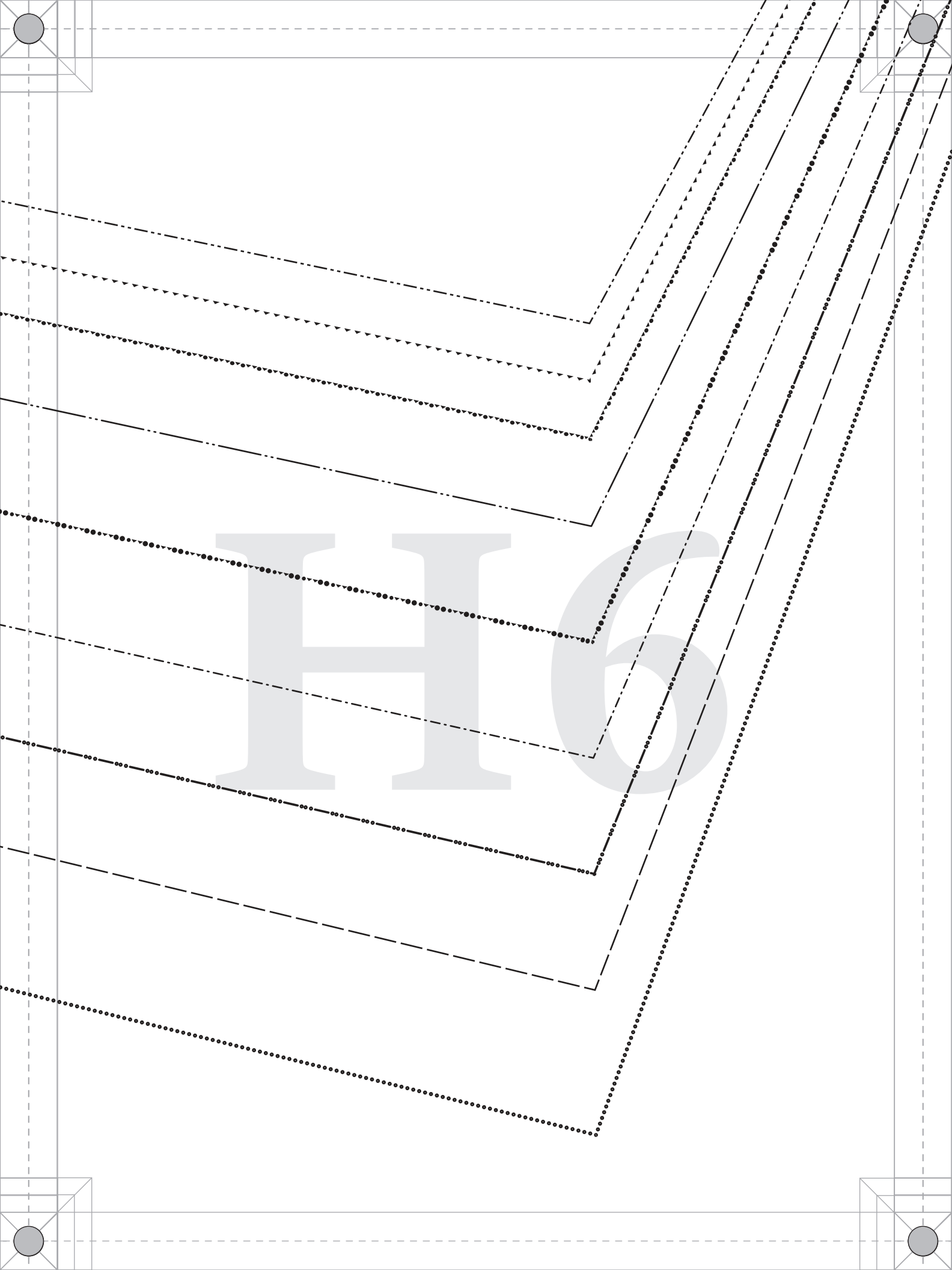

PATTERNS BY mood FABRICS MDF551

#MoodEspressoPattern

"The Espresso Trench Vest"
MDF551

G - POCKET WELT

FABRIC: Cut 4

Ladies Sizes XS to 5XL

1/2" seam allowances (SA's) included

