PATTERNS BY mood FABRICS

MDF471

#MoodTarrytownPattern

"The Tarrytown Tracksuit"

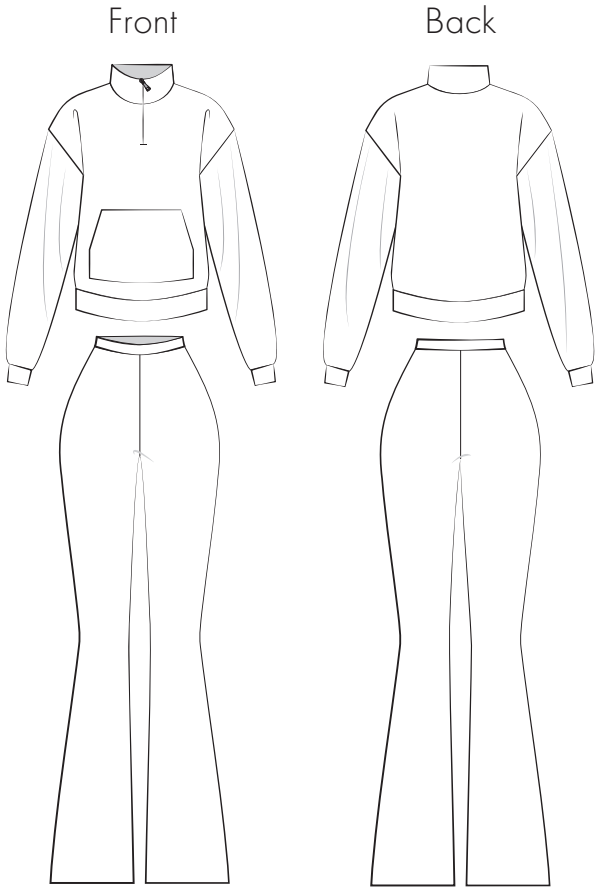

STOP!

Print only this page first to check accuracy. The Mood square above should measure 2 inches. Print "actual size" in "portrait" mode (not auto center). Formatted for both US Letter & A4 paper sizes.

Formatted for both US Letter & A4 Paper

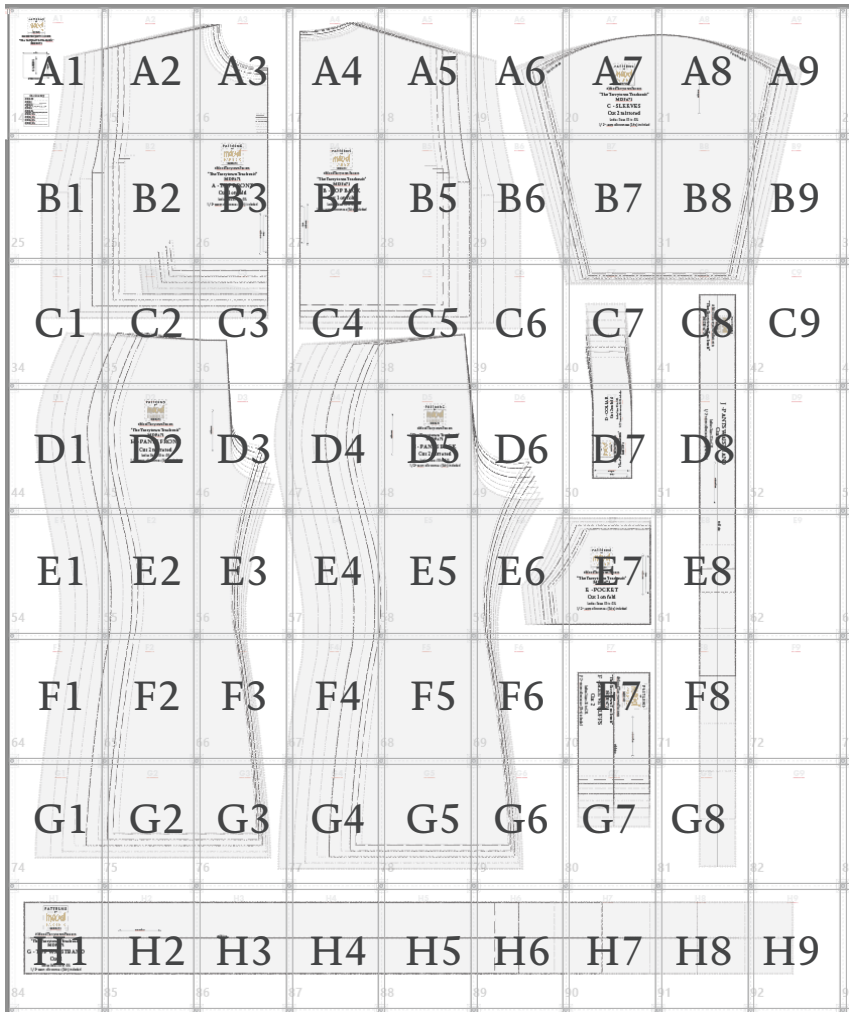

Trimless Option:
This is the fastest! No trimming needed! Place left-side margins over right-side margins, overlapping dashed lines and dots. In the same fashion, top margins will overlap bottom margins. Slight unprinted gaps are normal for this method.

Trimmed Option:
This removes any unprinted gaps. Trim along the top and right margins at the dashed lines. Overlap the trimmed margins to the untrimmed margins, matching dashed lines and dots.

Tip! Build rows first, then join the rows together as you go.

©2025 MoodFabrics.com / MoodSewciety.com
Mass production, resale, or distribution of this pattern in any form is strictly prohibited.

mood SEWCIETY

PATTERNS BY mood FABRICS MDF471

#MoodTarrytownPattern

MDF471 - "The Tarrytown Tracksuit"

Ladies Sizes XS to 5XL

BODY MEASUREMENTS - IN INCHES (Chart 1)

SIZE	XS	S	M	L	XL	2XL	3XL	4XL	5XL
BUST	31 - 32	33 - 34	25 - 36	37 - 39	40 - 43	44 - 47	48 - 51	52 - 55	56 - 60
WAIST	23 - 24	25 - 26	27 - 28	29 - 31	32 - 35	36 - 39	40 - 43	44 - 47	48 - 52
HIPS	34 - 35	36 - 37	38 - 39	40 - 42	43 - 46	47 - 50	51 - 54	55 - 58	60 - 63

APPROXIMATE FINISHED GARMENT MEASUREMENTS - IN INCHES (Chart 2)

	SIZE	XS	S	M	L	XL	2XL	3XL	4XL	5XL
TOP	BUST	44	46	48	51	55	59	63	67	72
TOP	WAIST	44	46	48	51	55	59	63	67	72
TOP	LENGTH*	24	24	24.5	25	25	25.5	25.5	26	26
PANTS	WAIST	23	25	27	30	34	38	42	46	51
PANTS	HIPS	34	36	38	41	45	49	53	57	62
PANTS	LENGTH*	41	41	41.5	41.5	42	42	42.5	43	43

*The pants length for this design is 3" below the ankle for standard sizes. You can adjust the length according to your preference or needs. To maintain the intended look, reduce 2 inches for petite sizes and add 3 to 5 inches for tall sizes. Length measurements in the chart do not include the waistband.

***Designed for four-way stretch fabrics (with at least 25% stretch both ways). Size guide is based on the suggested design and wearing ease for this style. There is negative ease due to the stretch of the fabric. You can also choose the size according to your desired finished garment measurements, blending between sizes as needed. For best results, sew a test garment in a similar fabric to adjust your pattern.**

Recommended Fabrics: Stretch Velour, French Terry, Knit Fleece.

We love creating these free patterns for the community and we want to keep them free! In return, we hope you check out MoodFabrics.com for your next project!

Want to use one of our patterns to make a garment to sell? Our patterns are royalty-free! We just ask that you credit us with:
MoodSewciety.com
or
MoodFabrics.com
in your product description.

©2025 MoodFabrics.com / MoodSewciety.com
Mass production, resale, or distribution of this pattern in any form is strictly prohibited.

mood SEWCIETY

FOR SEWING INSTRUCTIONS AND MORE INFORMATION:
Scan the QR code or visit MoodSewciety.com and search "MDF471"

1/2" seam allowances (SA's) included unless stated otherwise.

REMEMBER TO SHARE YOUR MADE WITH MOOD LOOK!

Tag us and use:
#MoodTarrytownPattern
for a shot at being featured on our social media

@mood.fabrics
@moodfabrics
@Mood_Fabrics
@moodfabrics
@moodfabrics

♥ The Mood Sewciety Team

PATTERNS BY mood FABRICS MDF471

#MoodTarrytownPattern

"The Tarrytown Tracksuit"
Pattern Pieces

A	**TOP FRONT** FABRIC - CUT 1 ON FOLD
B	**TOP BACK** FABRIC - CUT 1 ON FOLD
C	**SLEEVES** FABRIC - CUT 2 MIRRORED
D	**COLLAR** FABRIC - CUT 2 ON FOLD
E	**POCKET** FABRIC - CUT 1 ON FOLD
F	**SLEEVE CUFFS** FABRIC - CUT 2
G	**TOP WAISTBAND** FABRIC - CUT 1
H	**PANTS FRONT** FABRIC - CUT 2 MIRRORED
I	**PANTS BACK** FABRIC - CUT 2 MIRRORED
J	**PANTS WAISTBAND** FABRIC - CUT 1

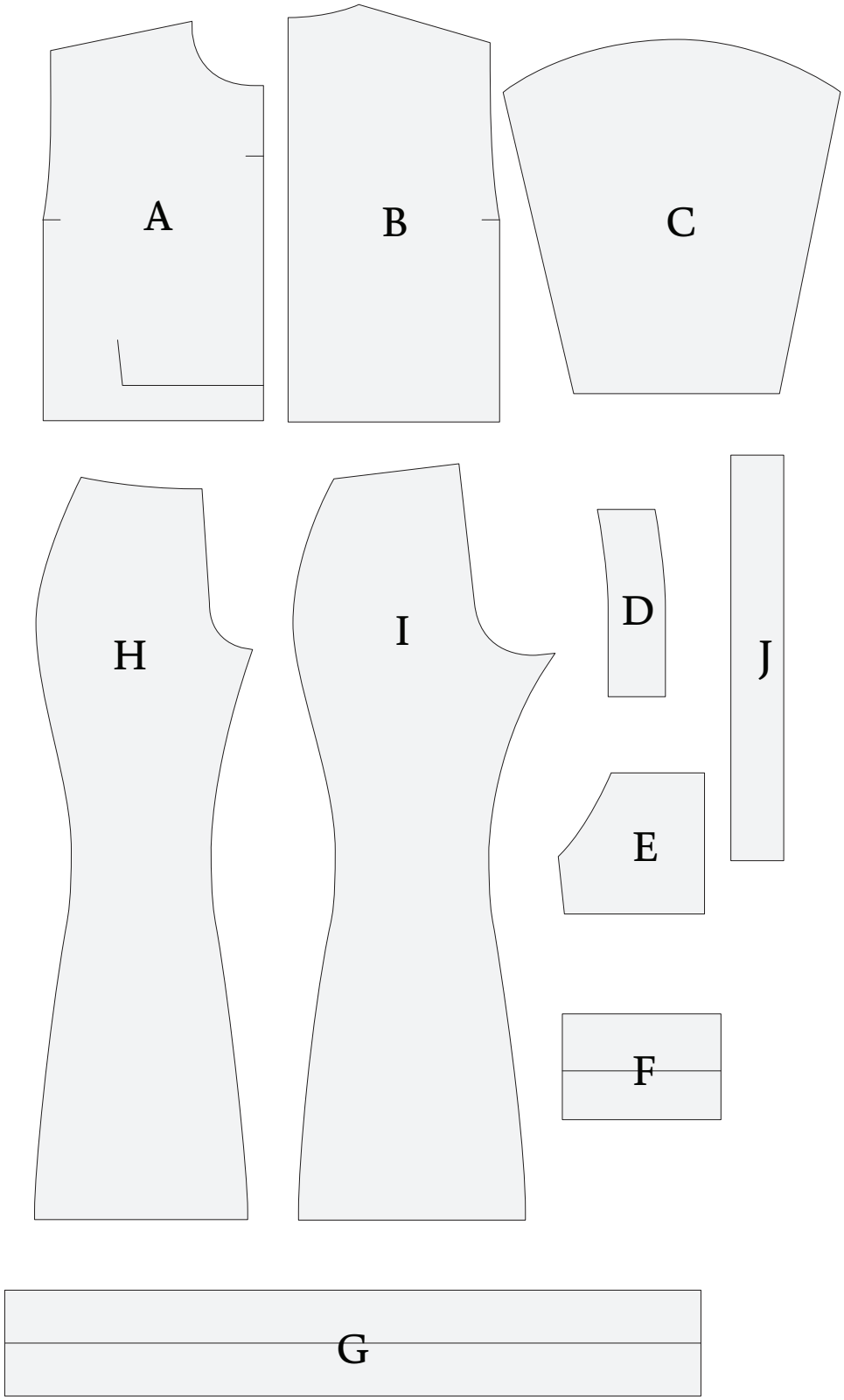

©2025 MoodFabrics.com / MoodSewciety.com
Mass production, resale, or distribution of this pattern in any form is strictly prohibited.
mood SEWCIETY

PATTERNS BY mood FABRICS
MDF471

#MoodTarrytownPattern

"The Tarrytown Tracksuit"
MDF471

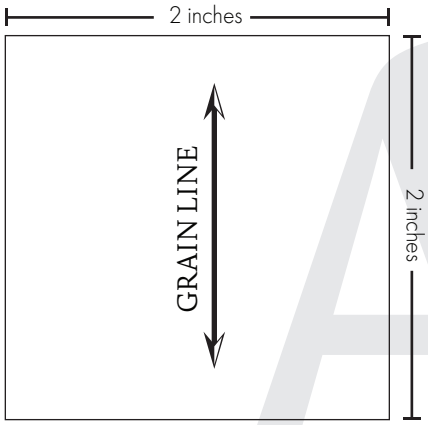

2" PRINT TEST BOX

A1

Size Line Key
SIZE XS
SIZE S
SIZE M
SIZE L
SIZE XL
SIZE 2XL
SIZE 3XL
SIZE 4XL
SIZE 5XL

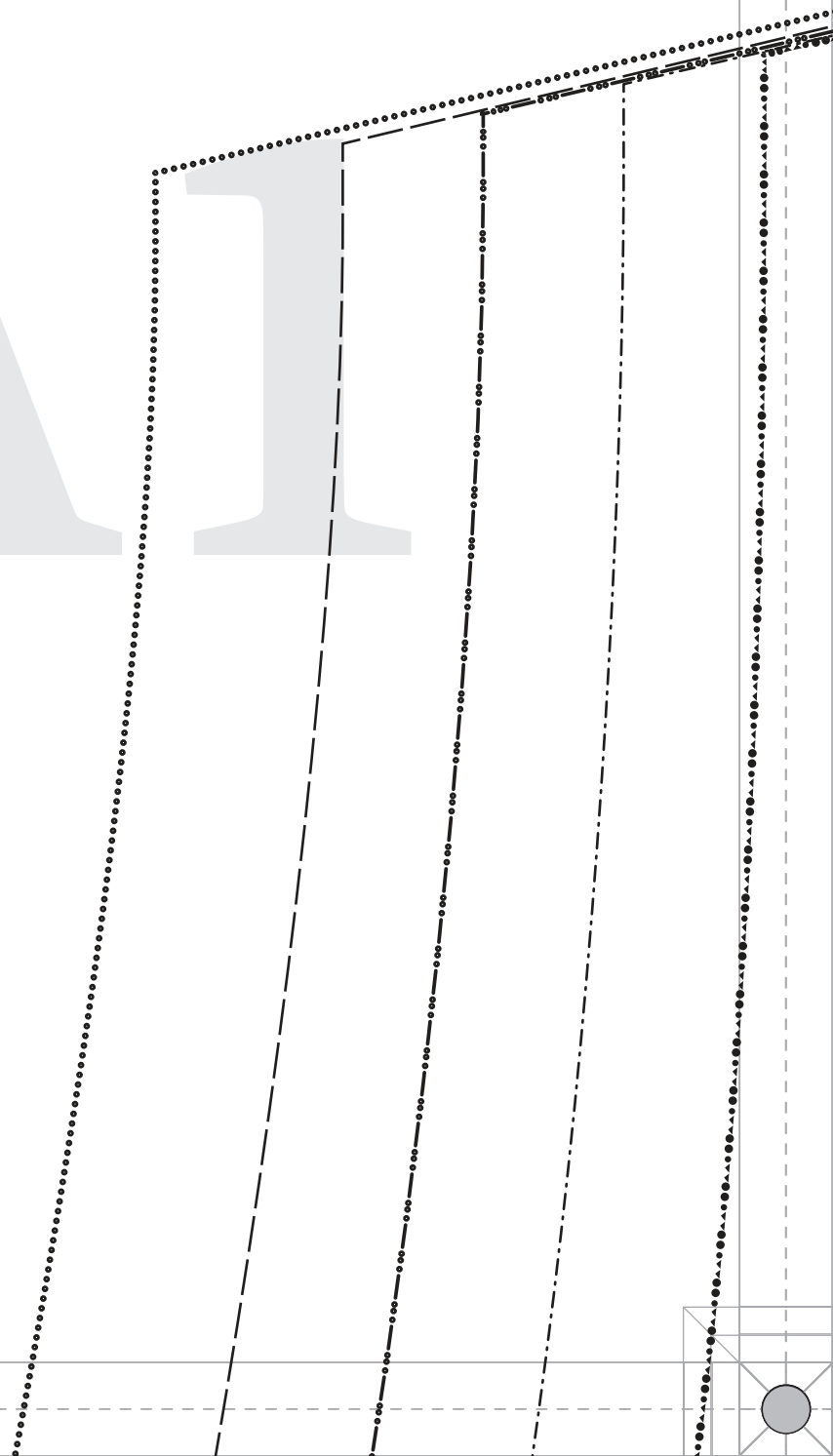

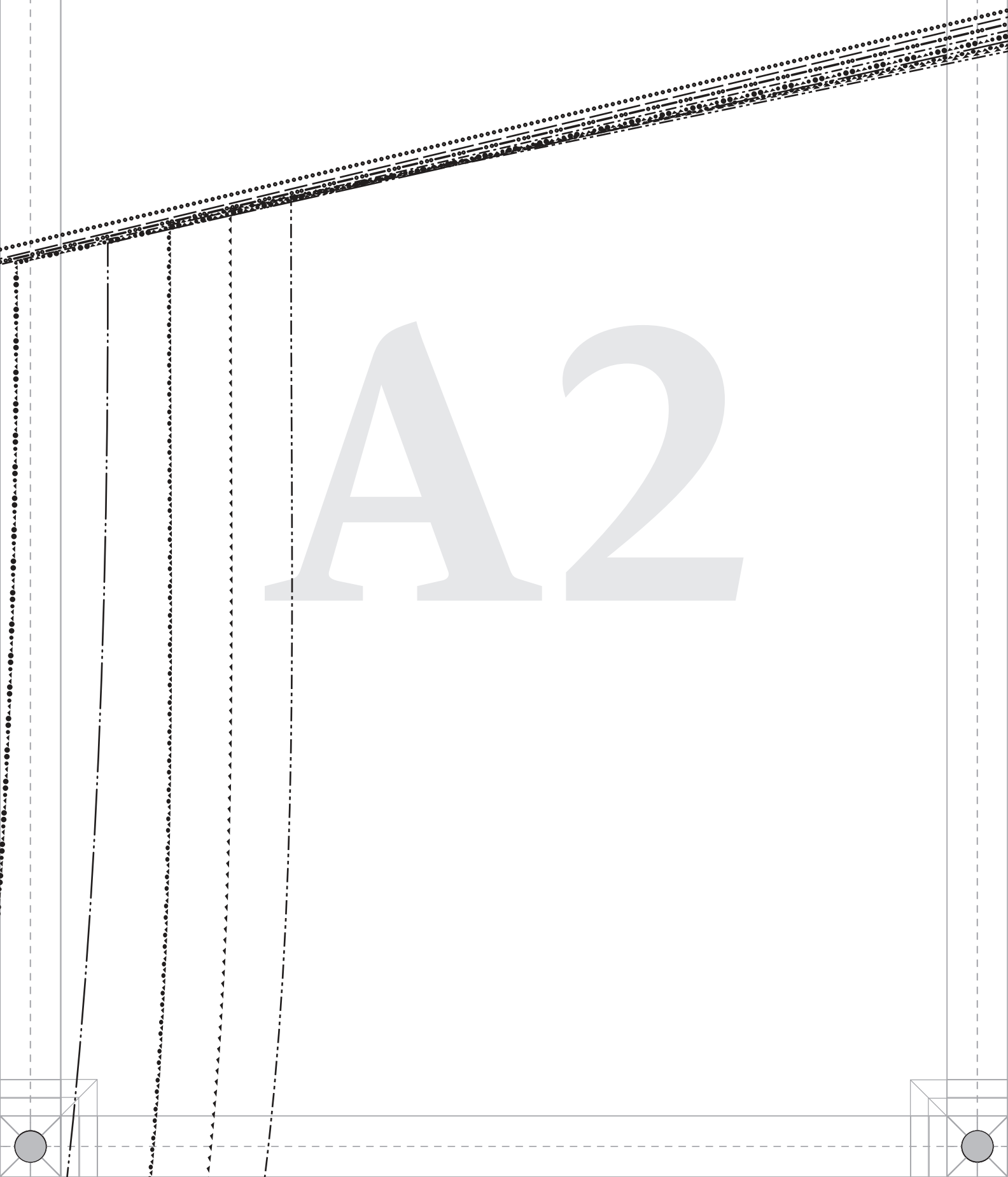
A2

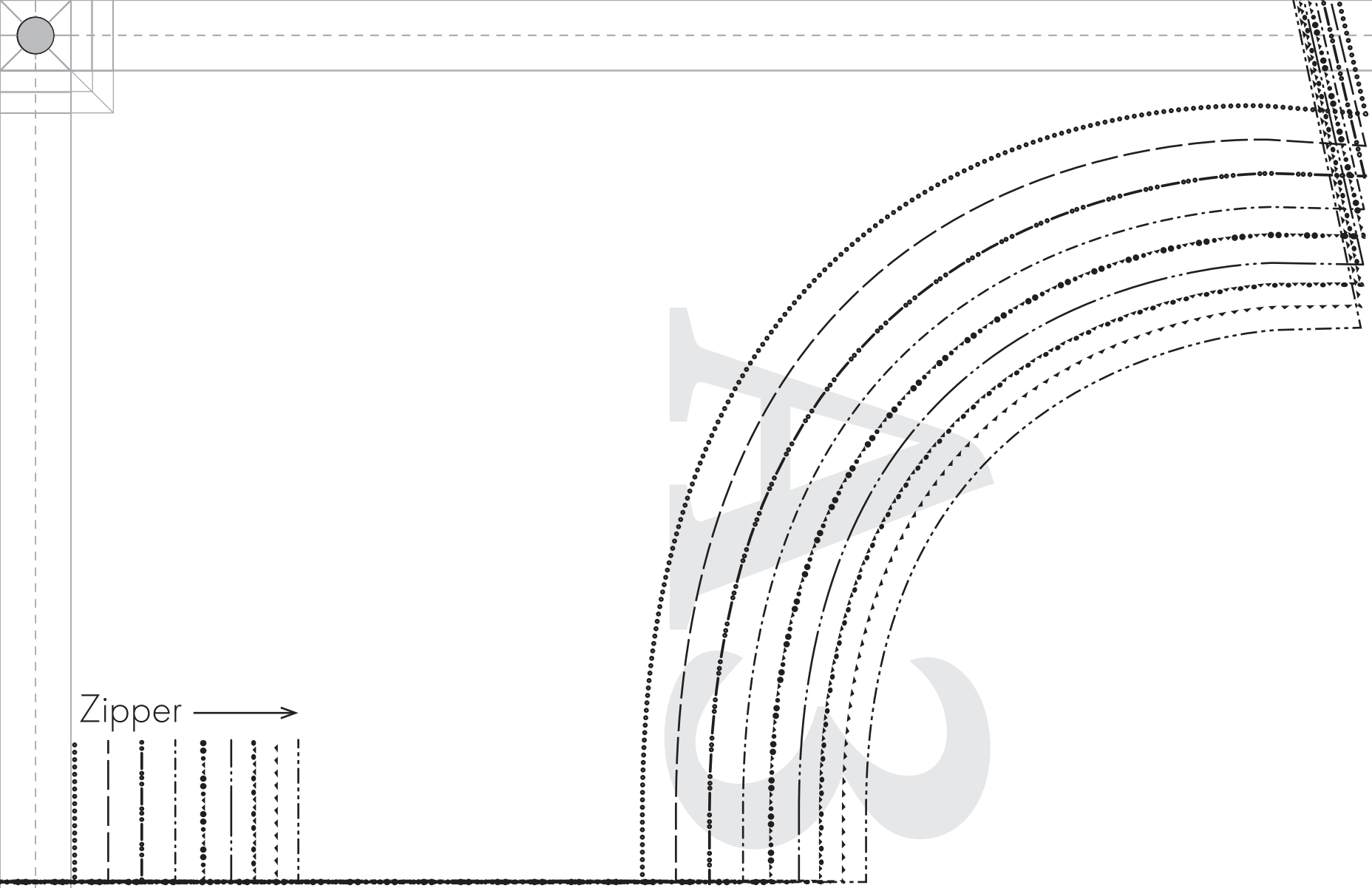
Zipper

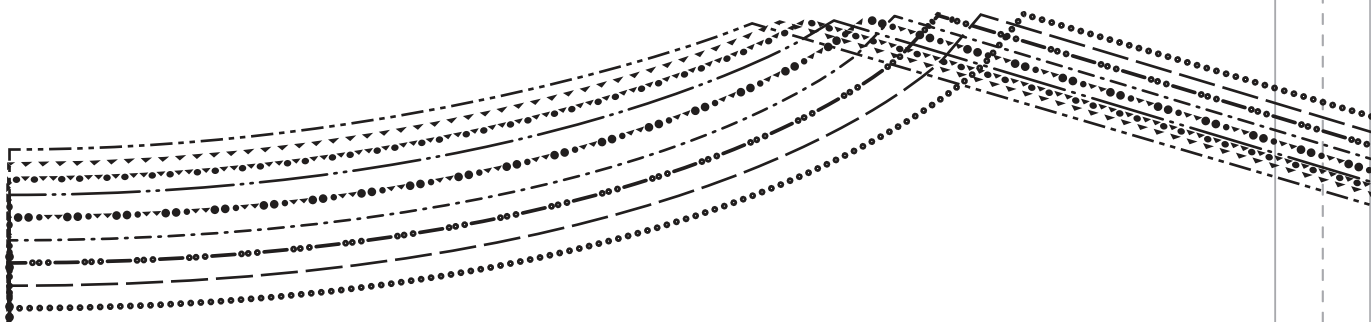

A4

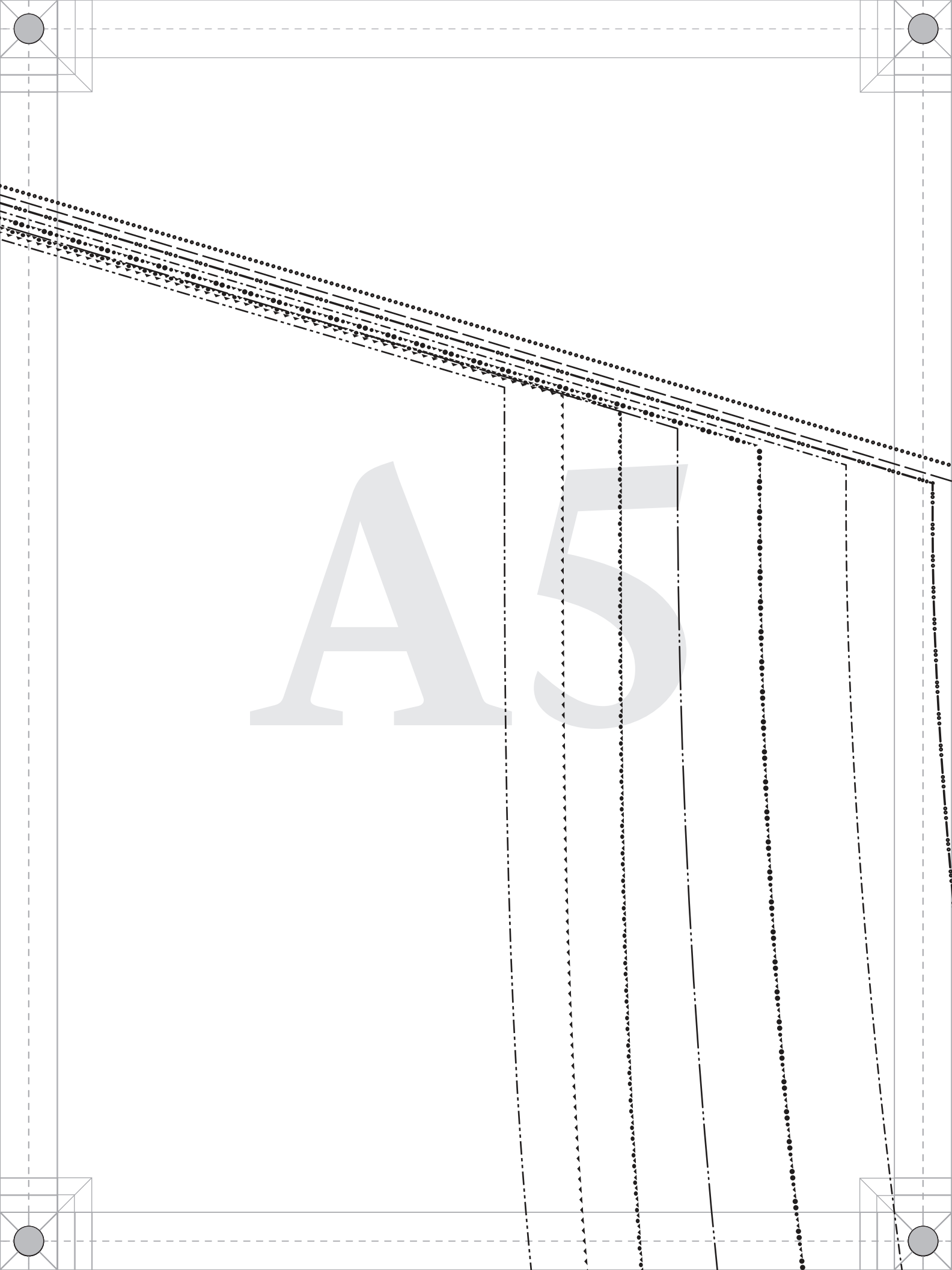
A5

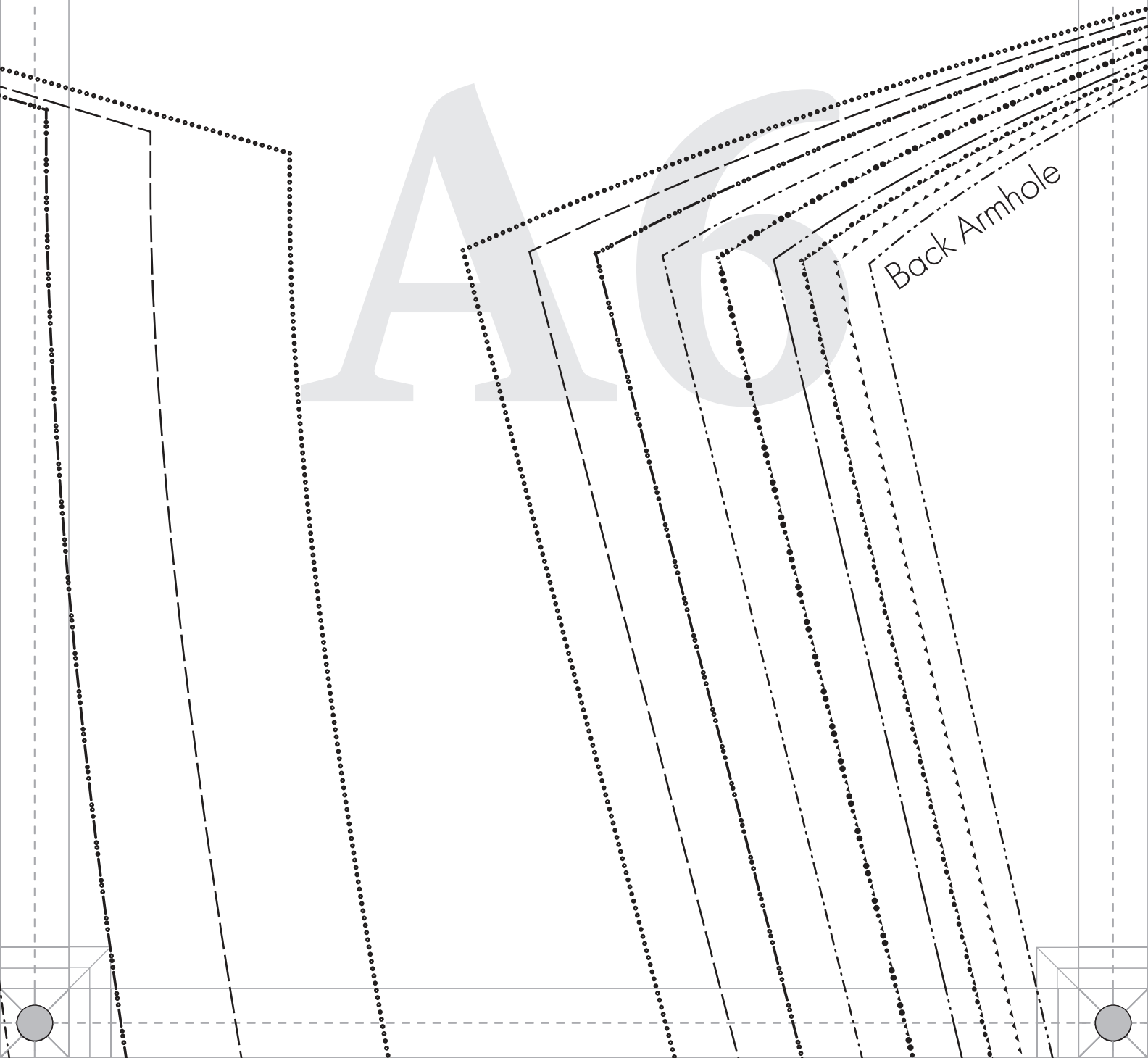
A6
Back Armhole

PATTERNS BY mood FABRICS MDF471

#MoodTarrytownPattern

"The Tarrytown Tracksuit" MDF471

C - SLEEVES

Cut 2 mirrored

Ladies Sizes XS to 5XL

1/2" seam allowances (SA's) included



A8

GRAINLINE

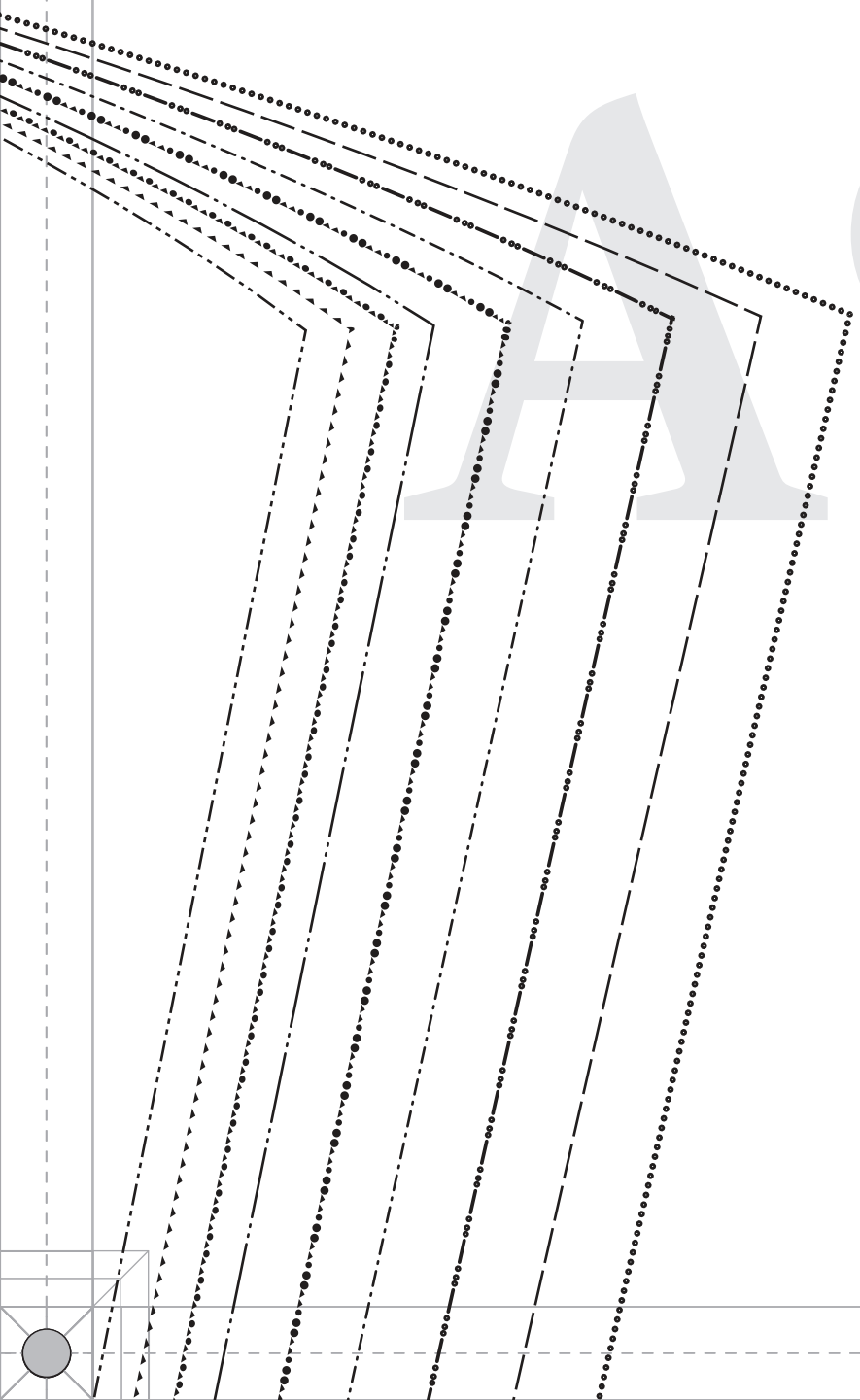

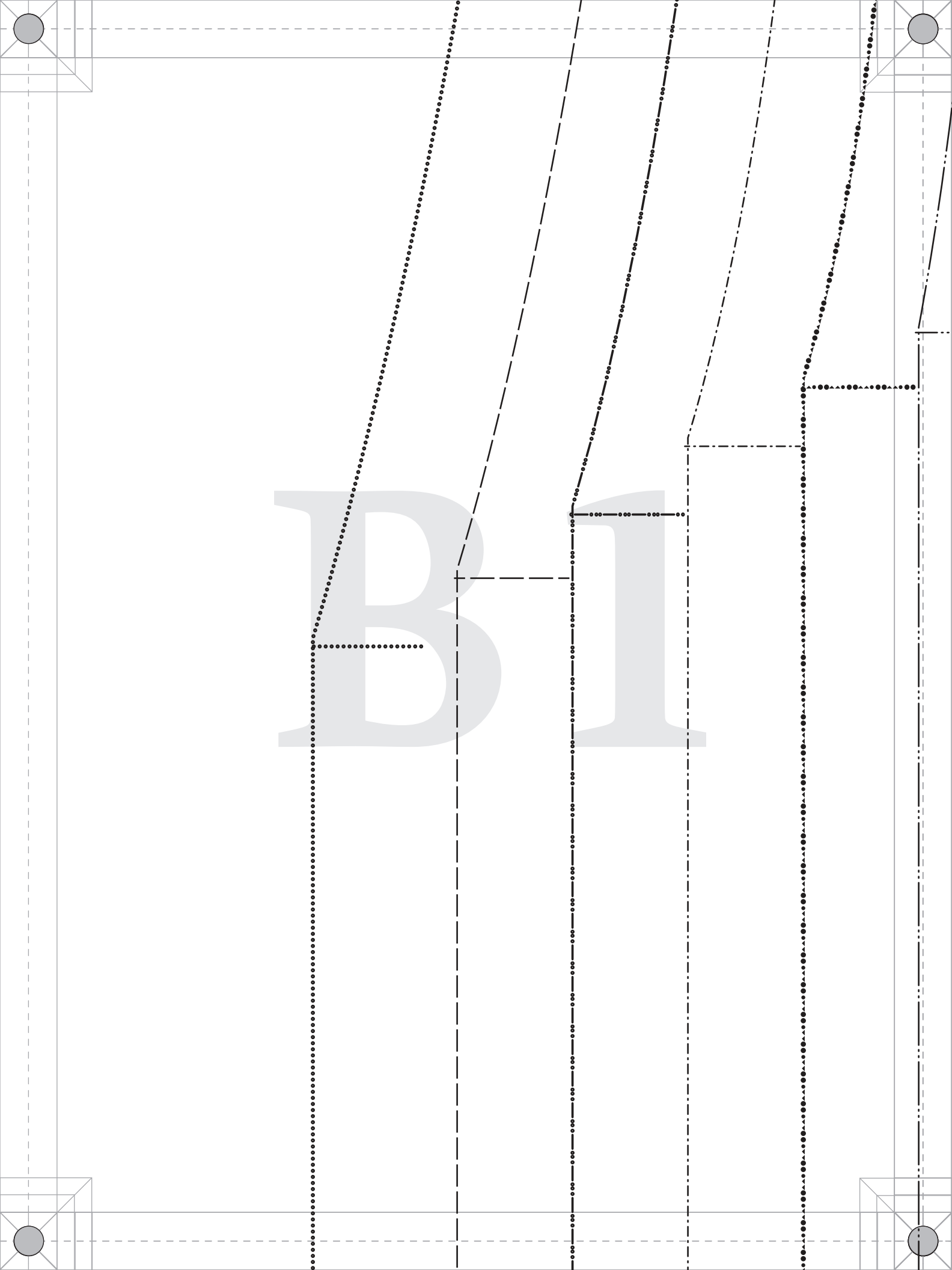

B2

Pocket Placement

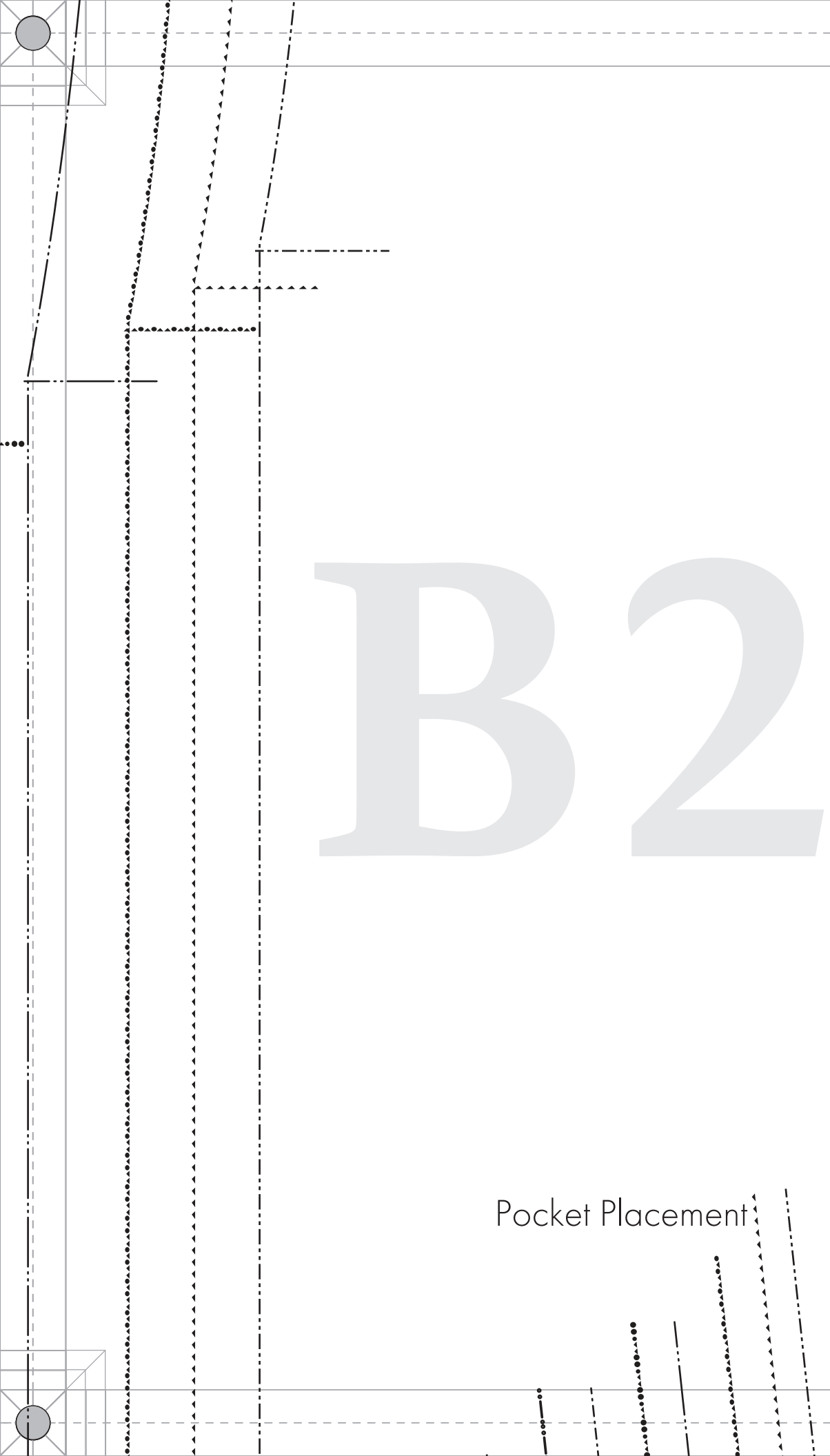

PATTERNS BY mood FABRICS MDF471

#MoodTarrytownPattern

"The Tarrytown Tracksuit" MDF471

A - TOP FRONT

Cut 1 on fold

Ladies Sizes XS to 5XL

1/2" seam allowances (SA's) included

B3



PATTERNS BY mood FABRICS MDF471

#MoodTarrytownPattern

"The Tarrytown Tracksuit" MDF471

B -TOP BACK

Cut 1 on fold

Ladies Sizes XS to 5XL

1/2" seam allowances (SA's) included



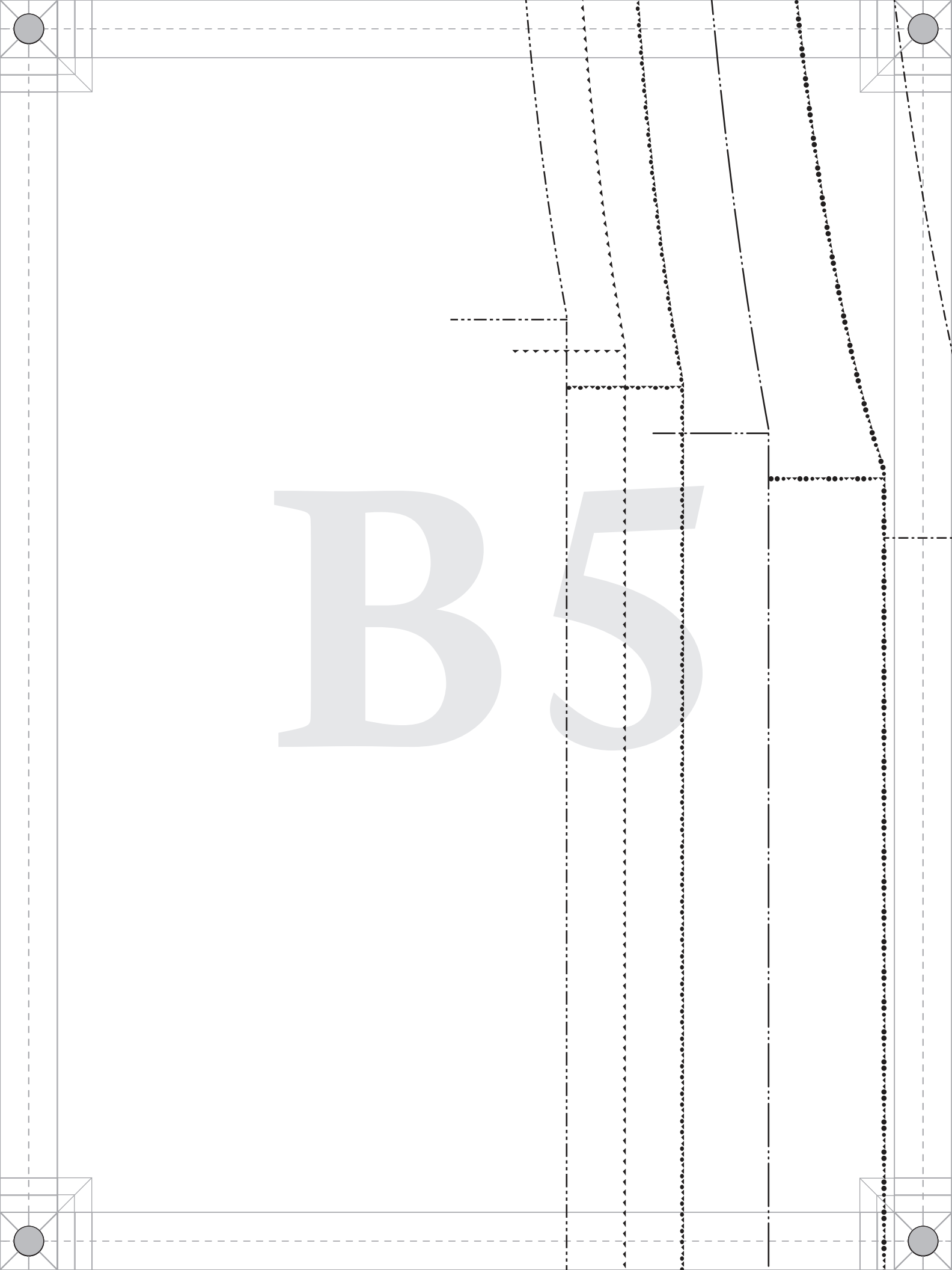
B5

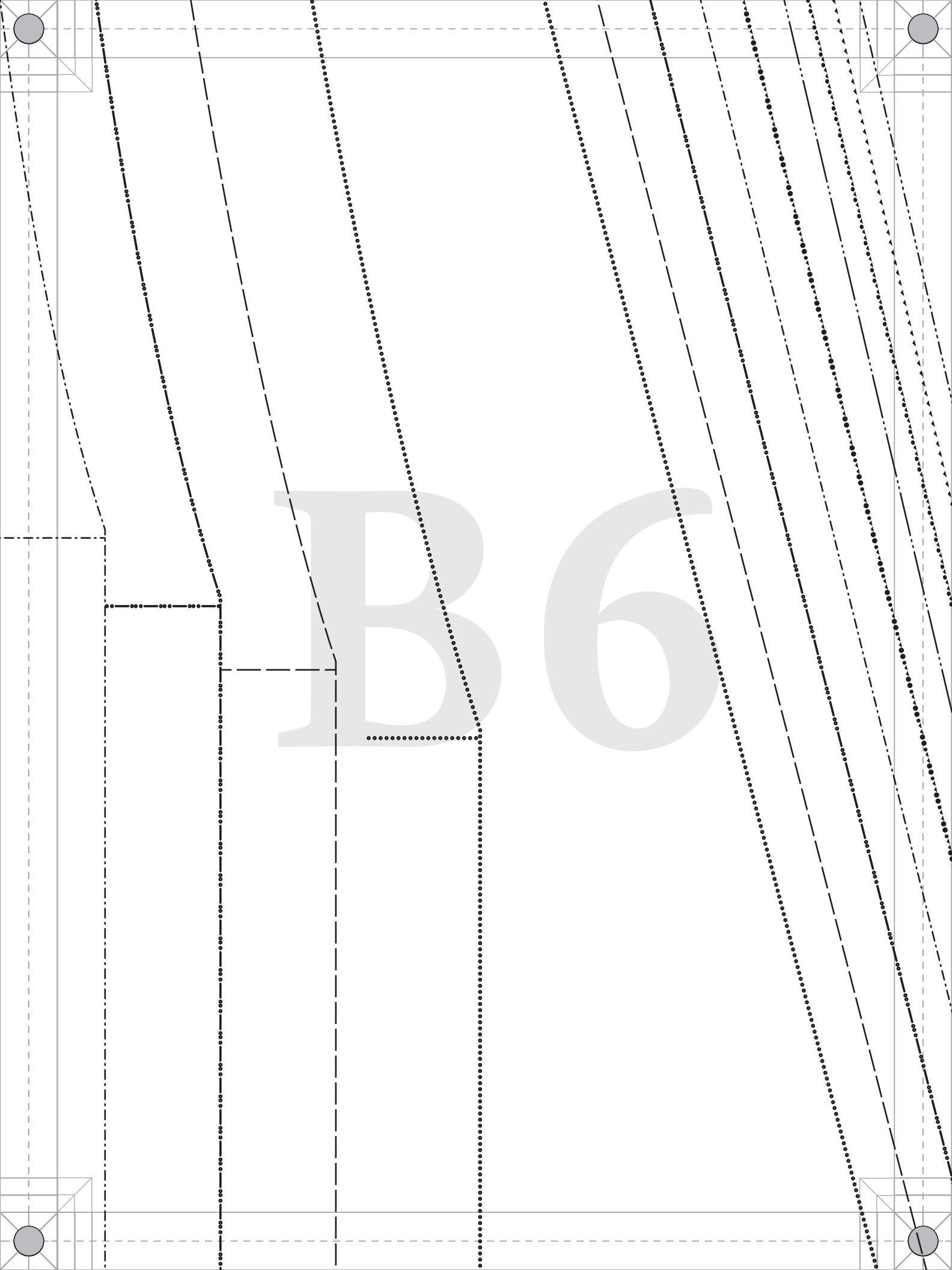
B6

B7

B8



B9

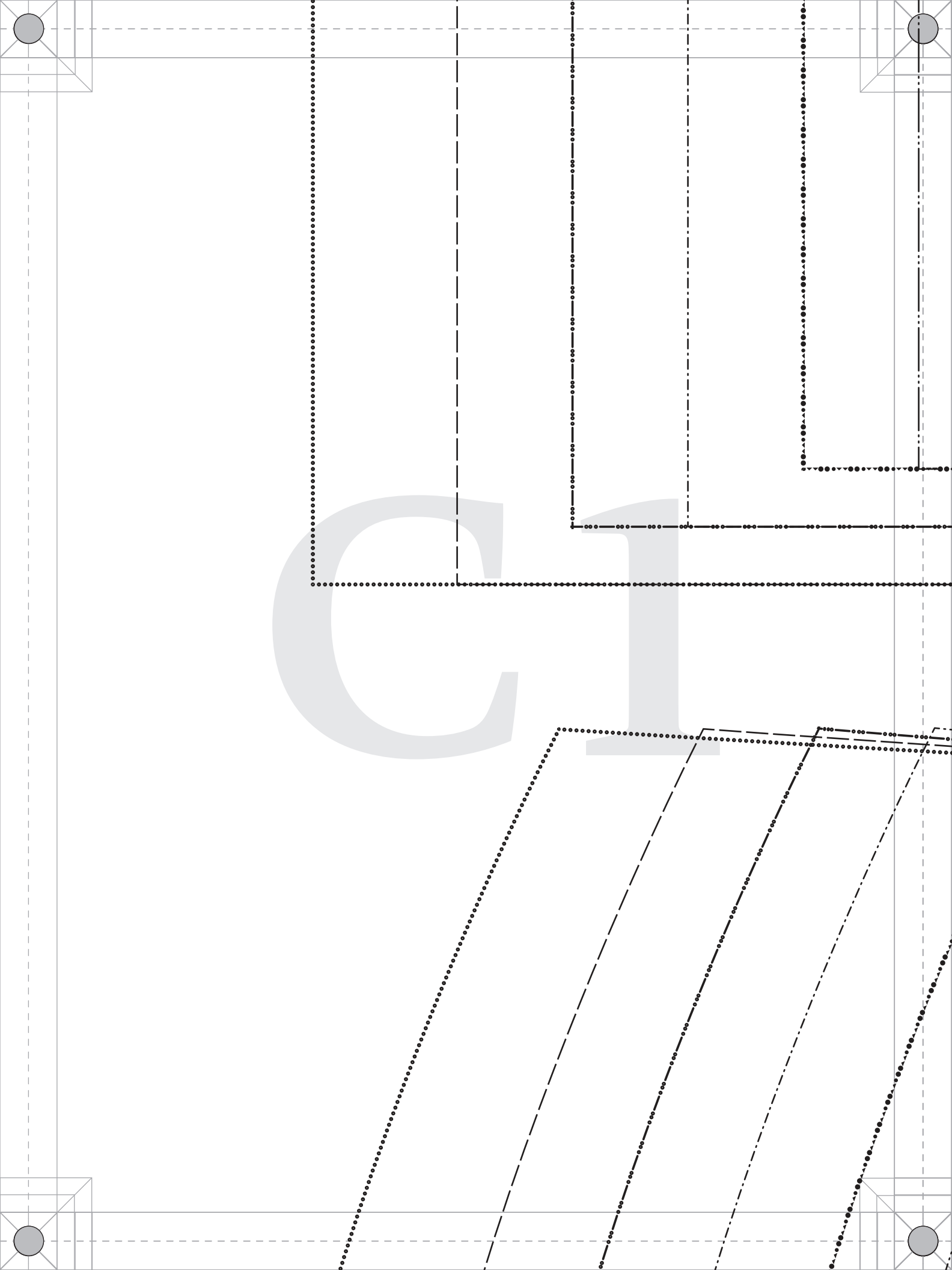

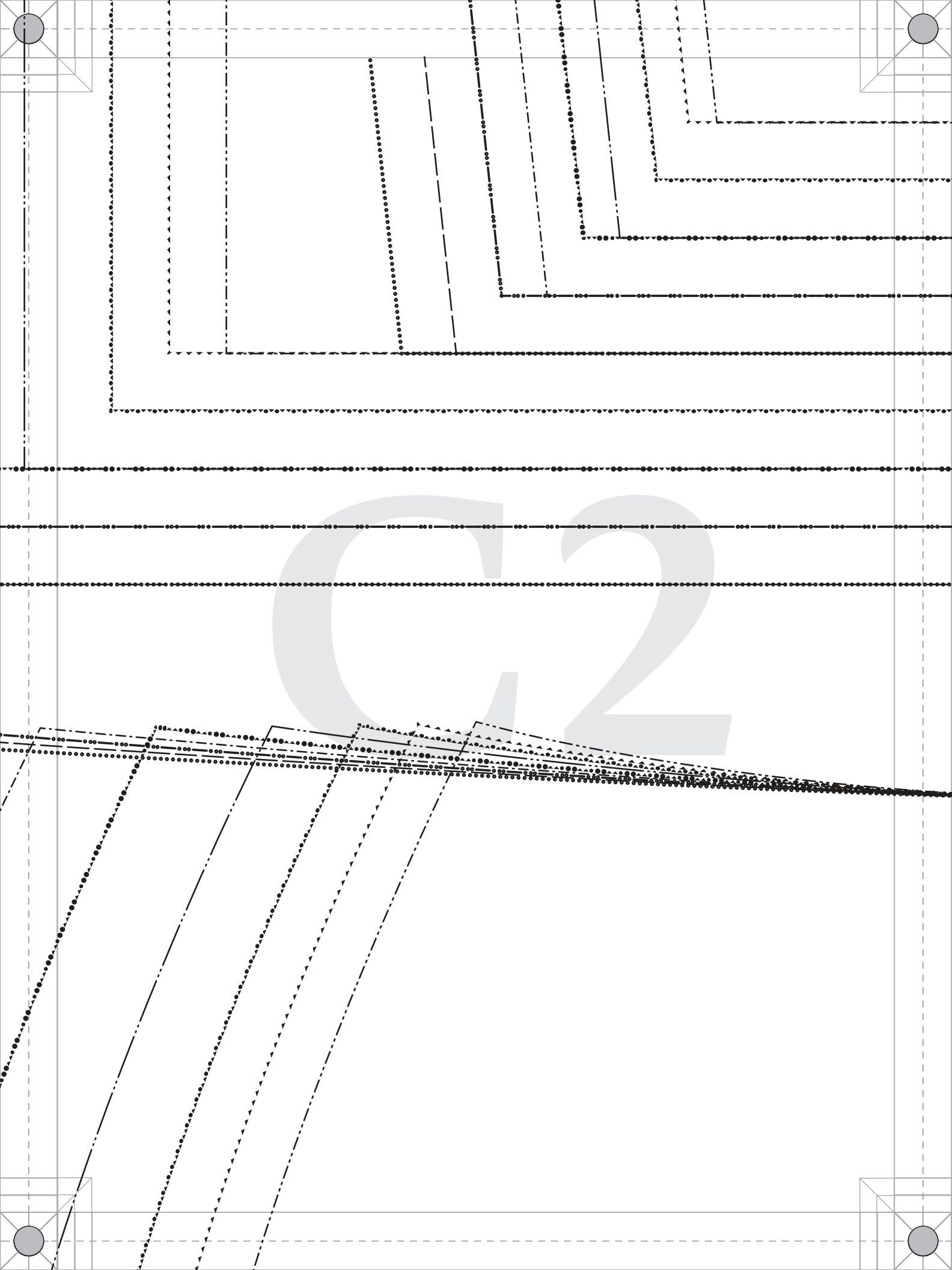

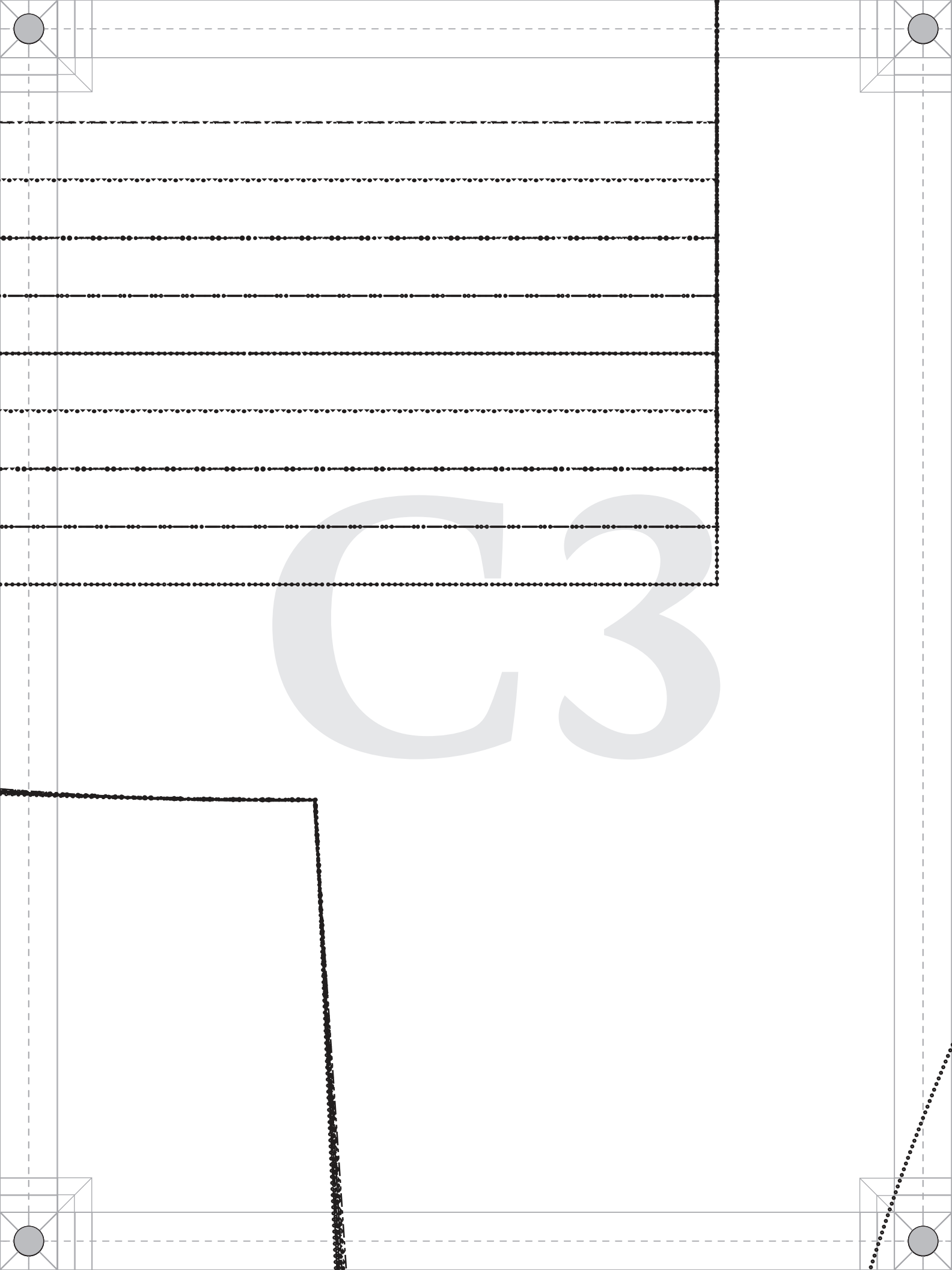
C3

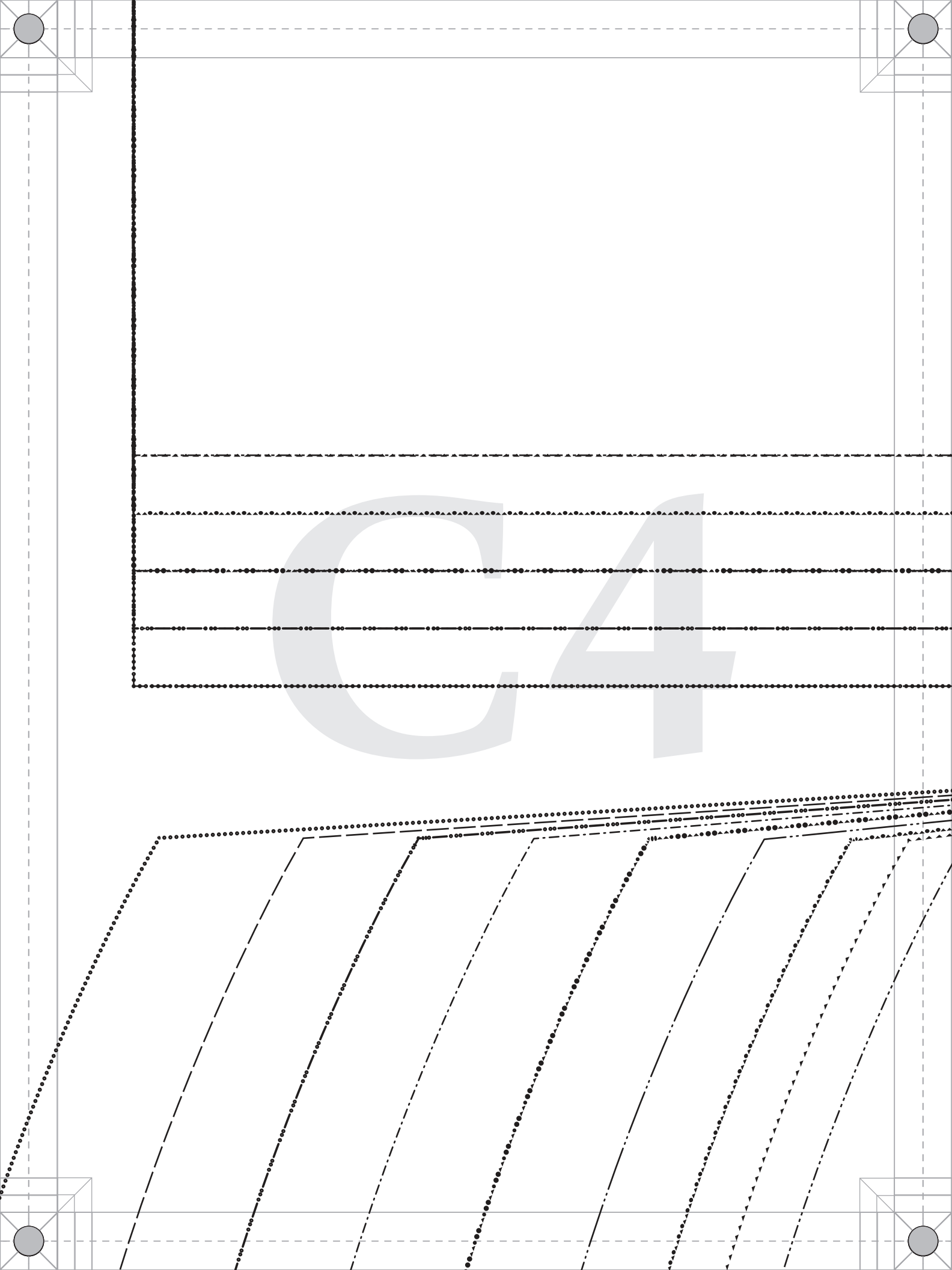
C4

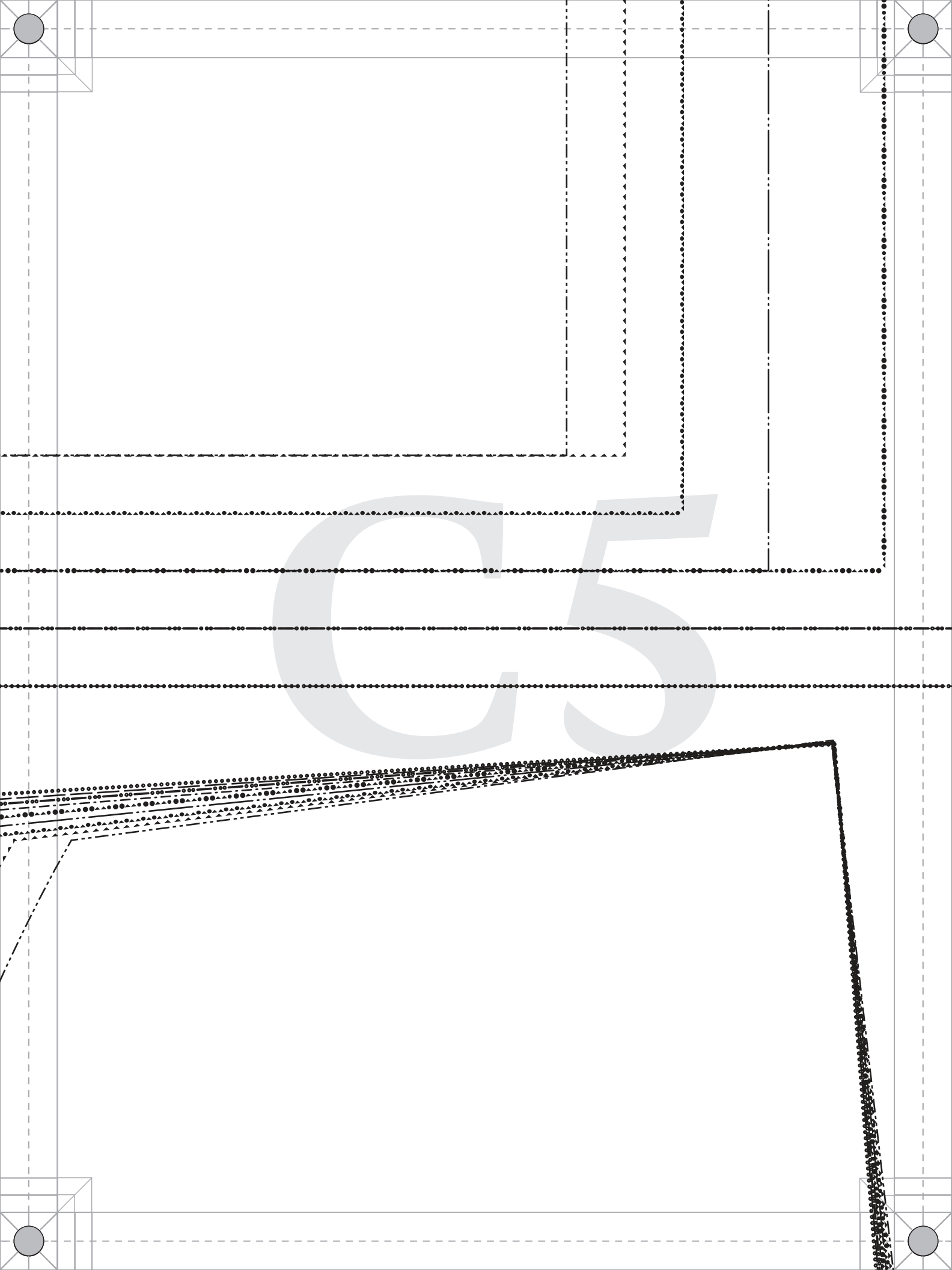
C5

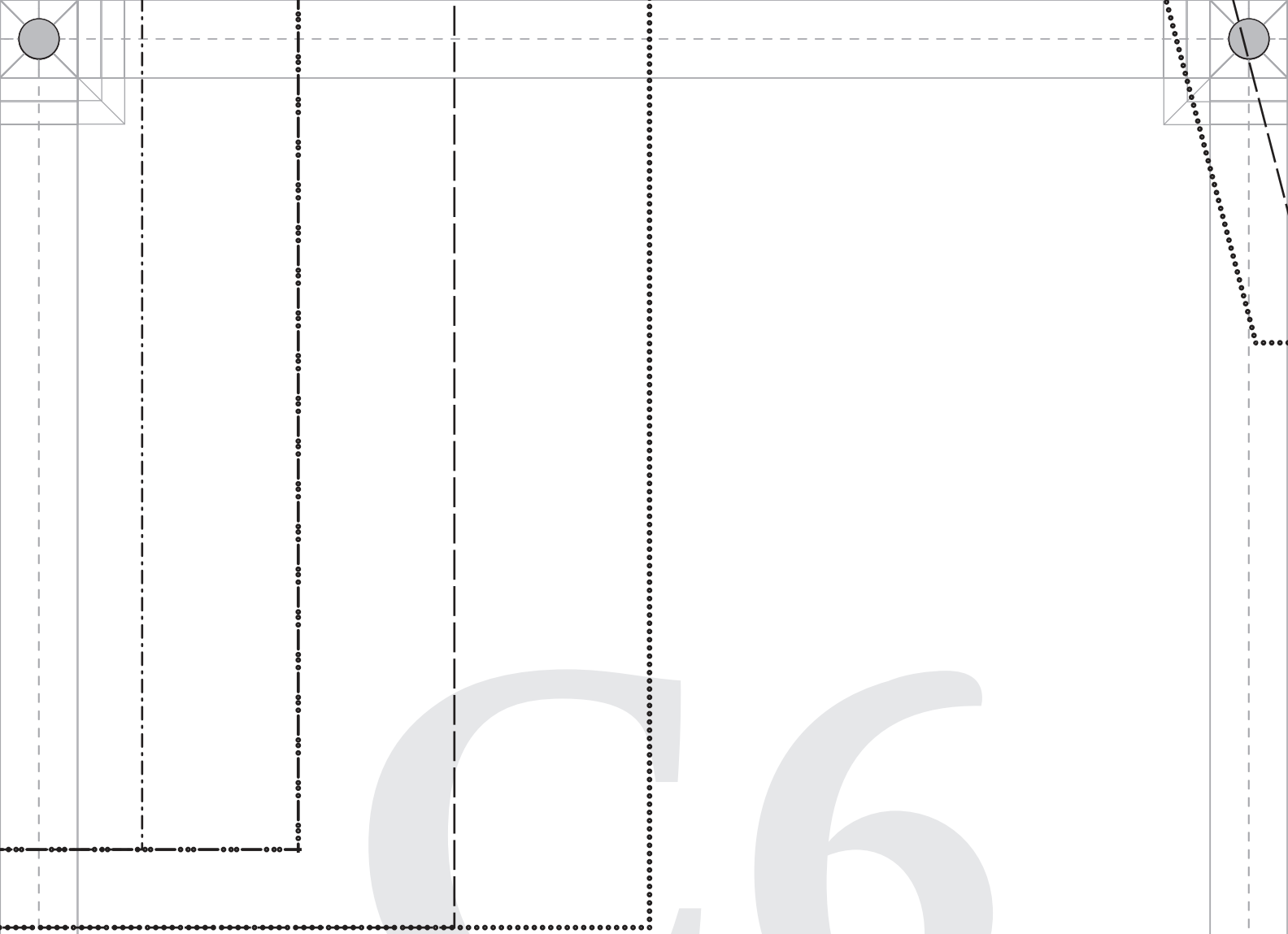
C6

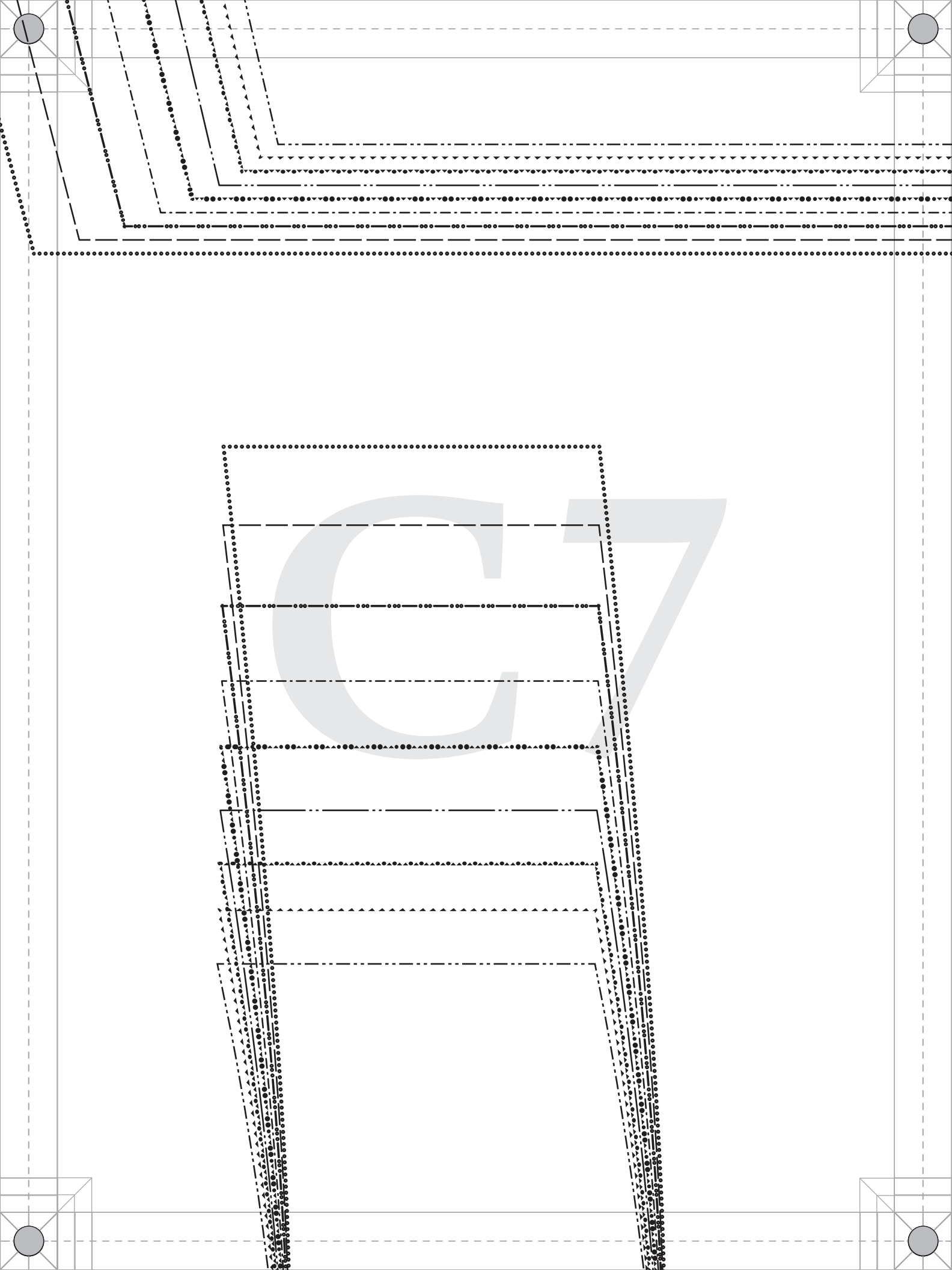

PATTERNS BY mood FABRICS MDF471

#MoodTarrytownPattern

“The Tarrytown Tracksuit” MDF471

C9

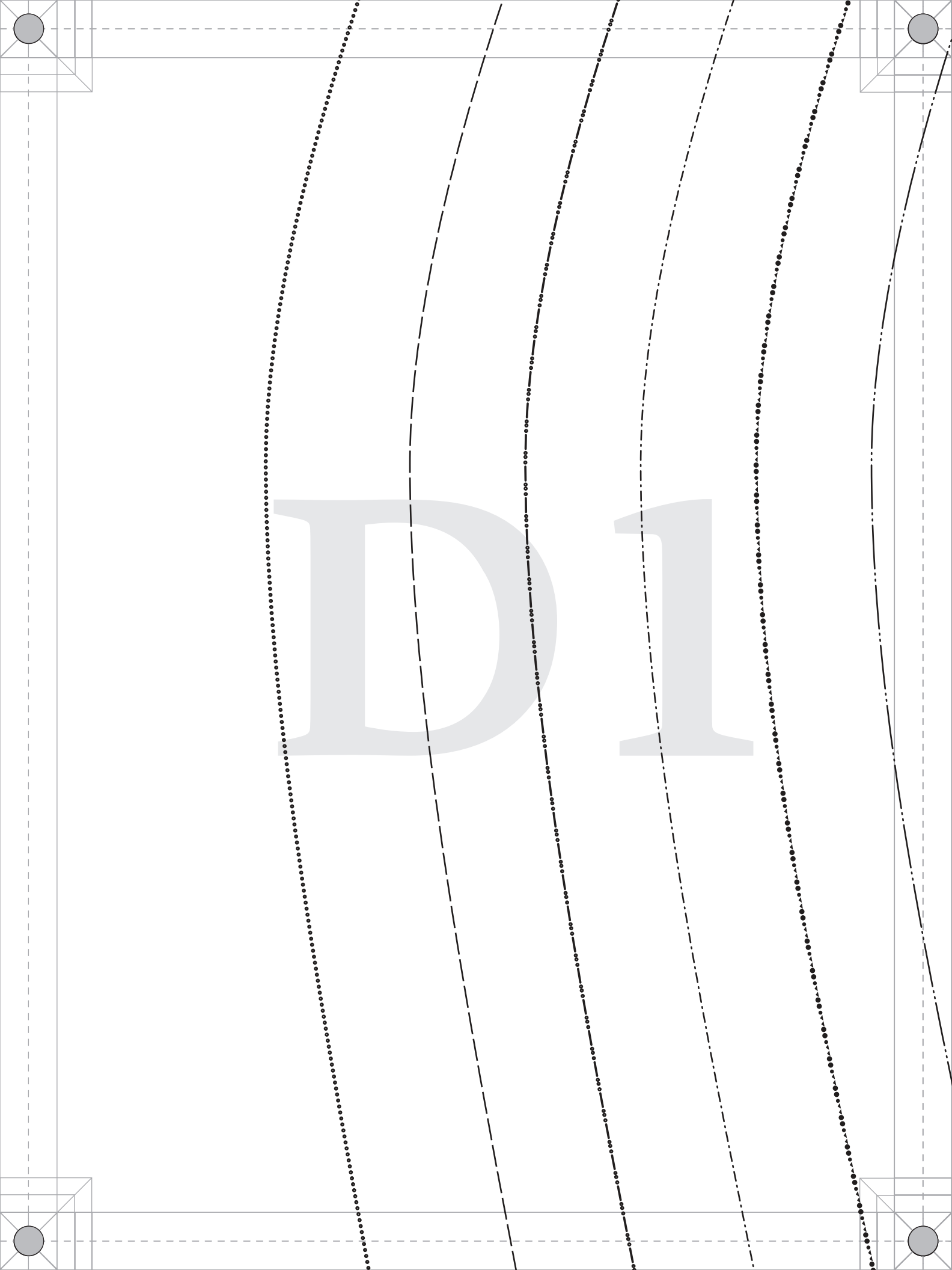
D1

PATTERNS BY mood FABRICS MDF471

#MoodTarrytownPattern

"The Tarrytown Tracksuit" MDF471

H - PANTS FRONT

Cut 2 mirrored

Ladies Sizes XS to 5XL

1/2" seam allowances (SA's) included

D2

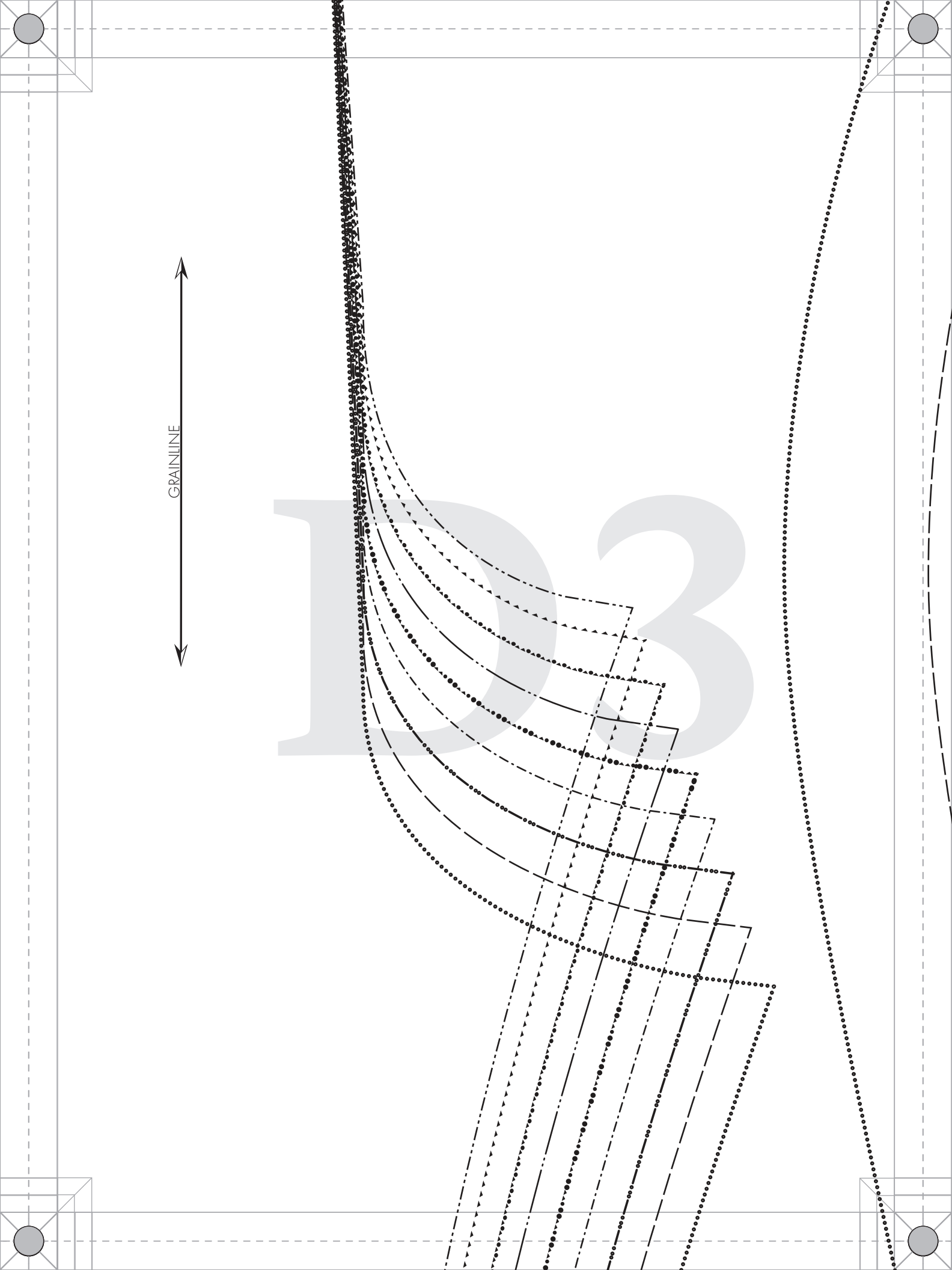
GRAINLINE
D3

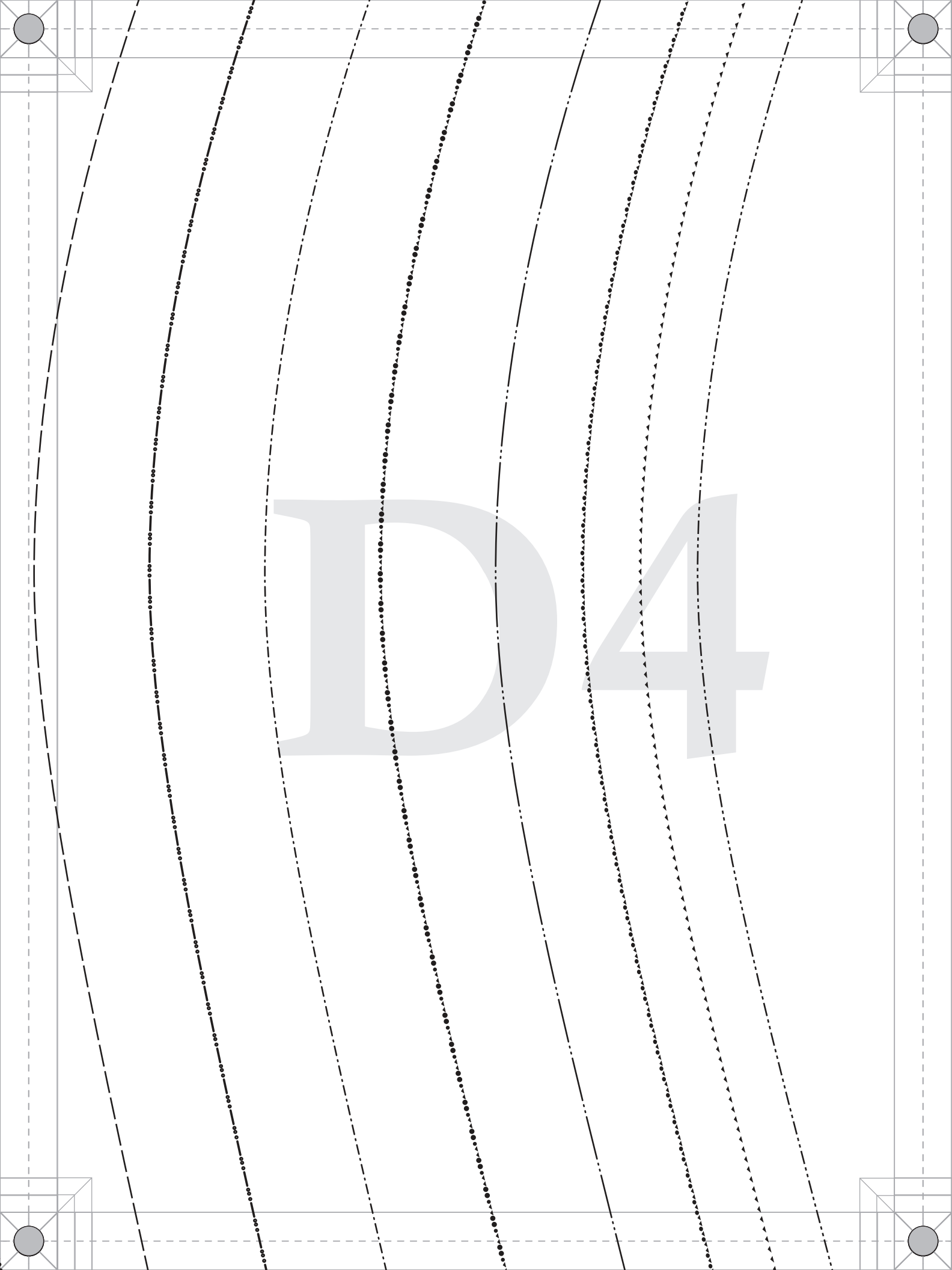
D4

PATTERNS BY mood FABRICS MDF471

#MoodTarrytownPattern

"The Tarrytown Tracksuit" MDF471

I - PANTS BACK

Cut 2 mirrored

Ladies Sizes XS to 5XL

1/2" seam allowances (SA's) included



D6

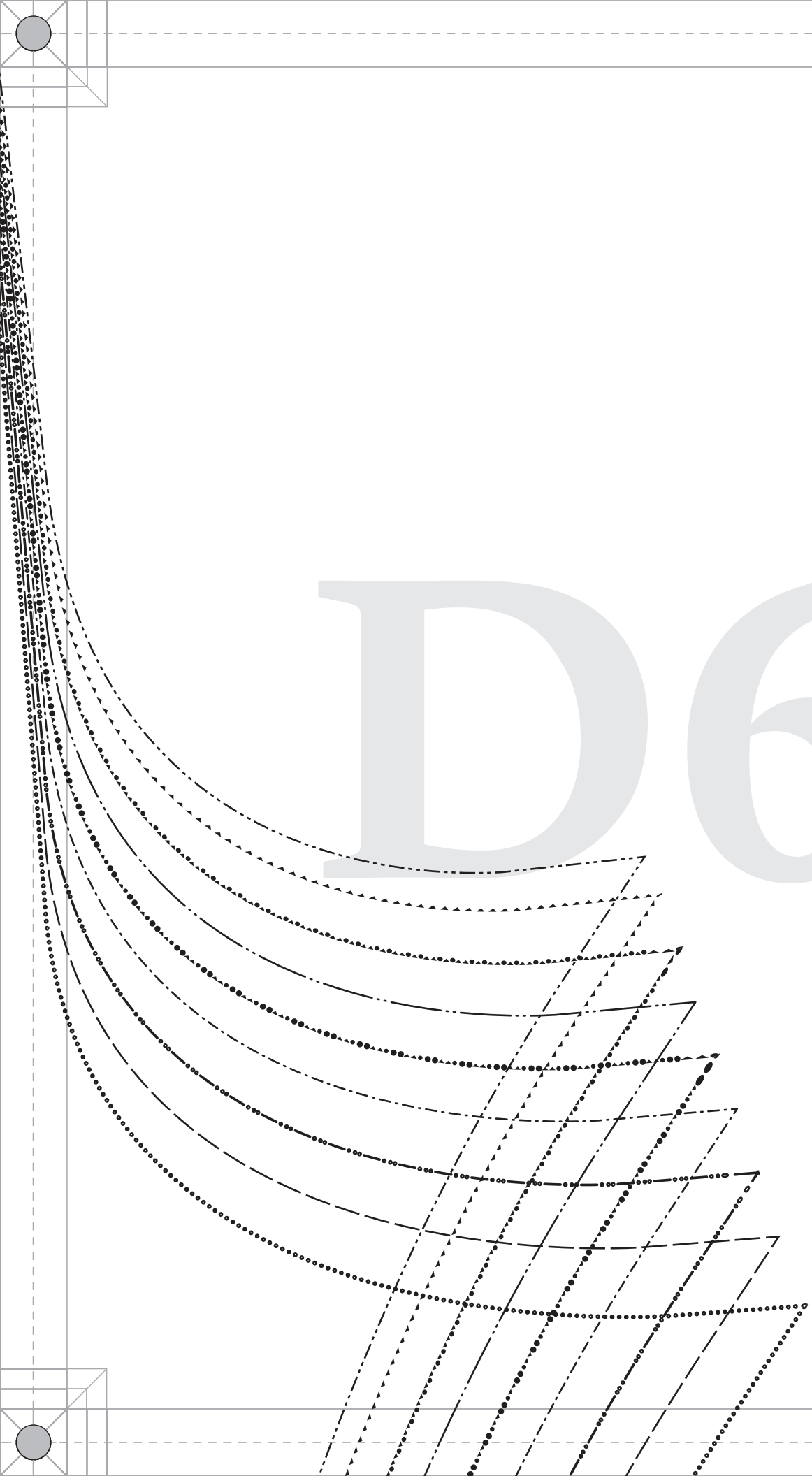



PATTERNS BY mood FABRICS MDF471

#MoodTarrytownPattern

"The Tarrytown Tracksuit"
MDF471

D - COLLAR

Cut 2 on fold

Ladies Sizes XS to 5XL

1/2" seam allowances (SA's) included

J - PANTS WAISTBAND

Cut 1



Ladies Sizes XS to 5XL

1/2" seam allowances (SA's) included

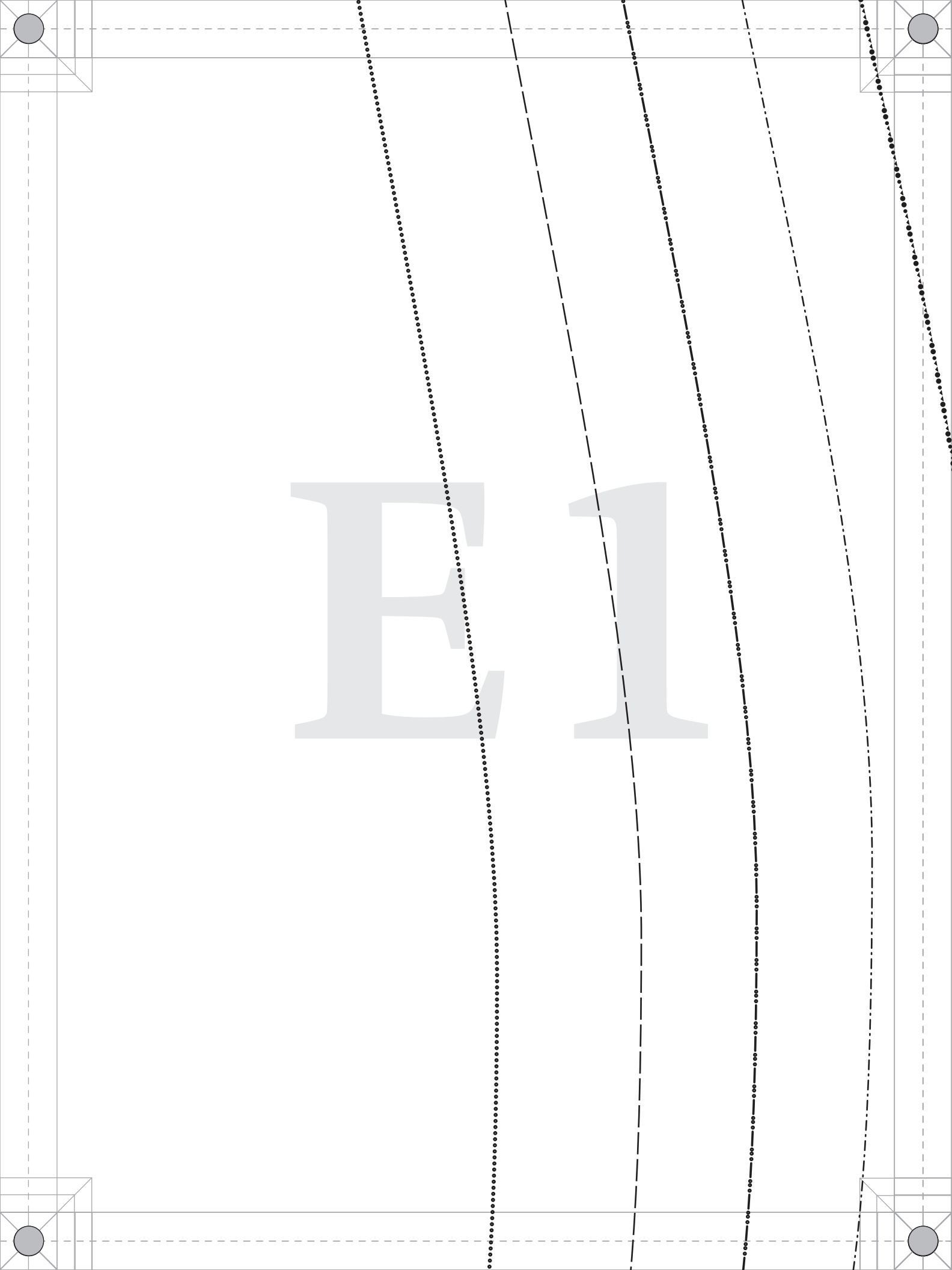
E1

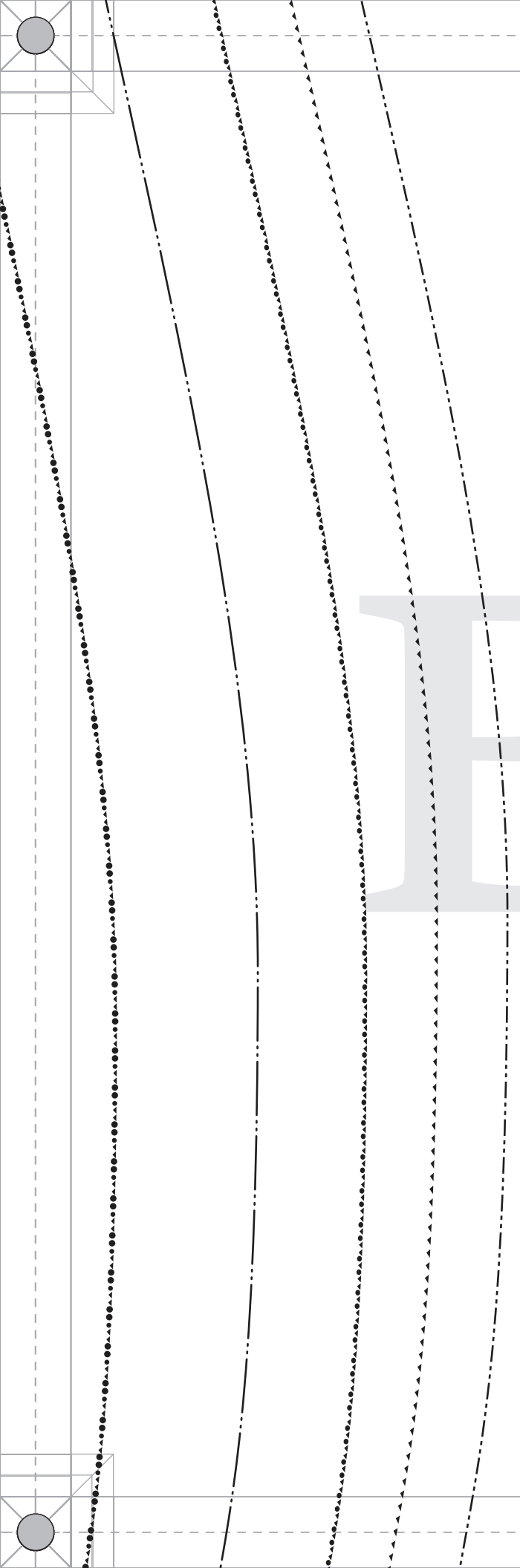

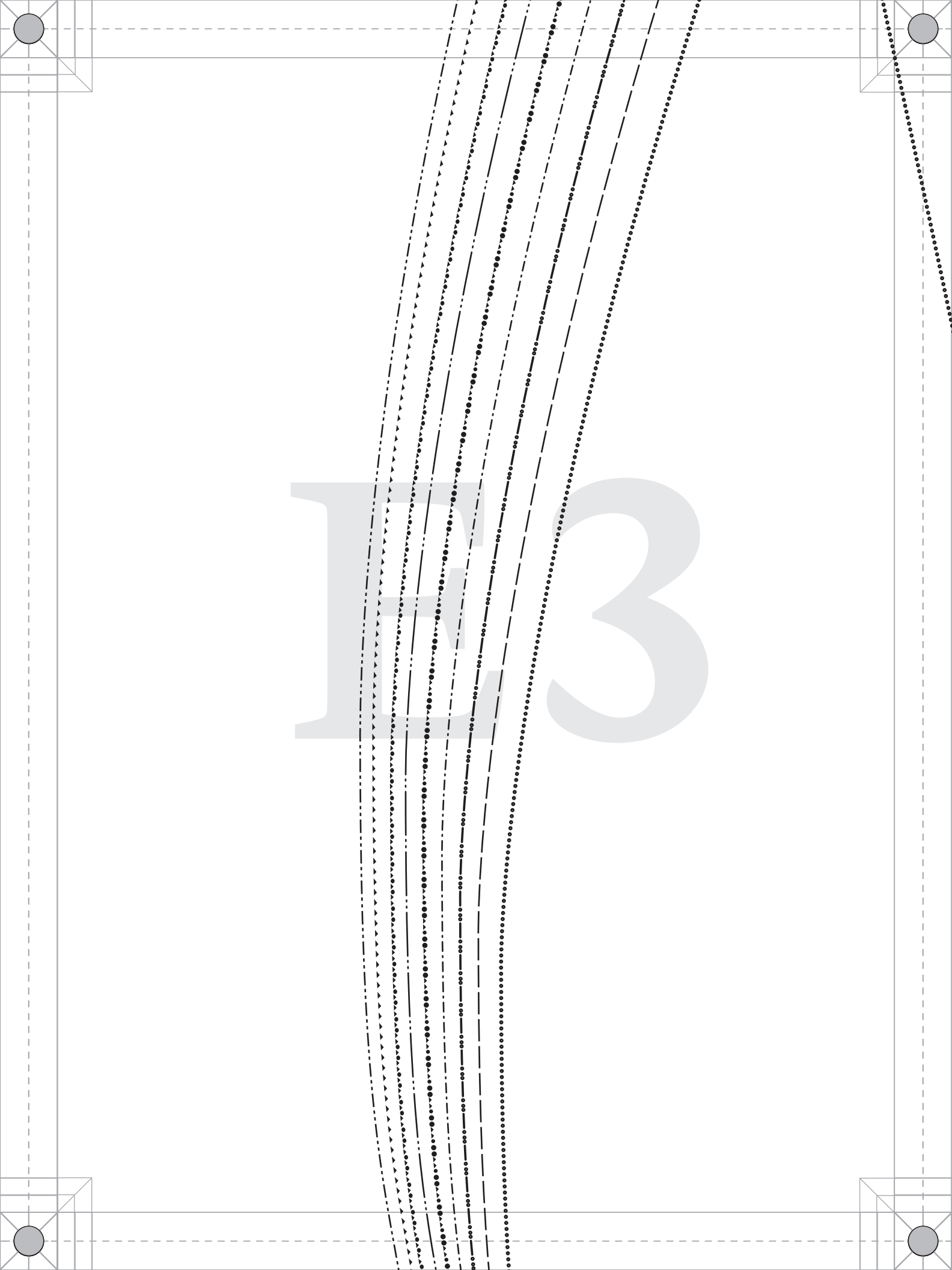

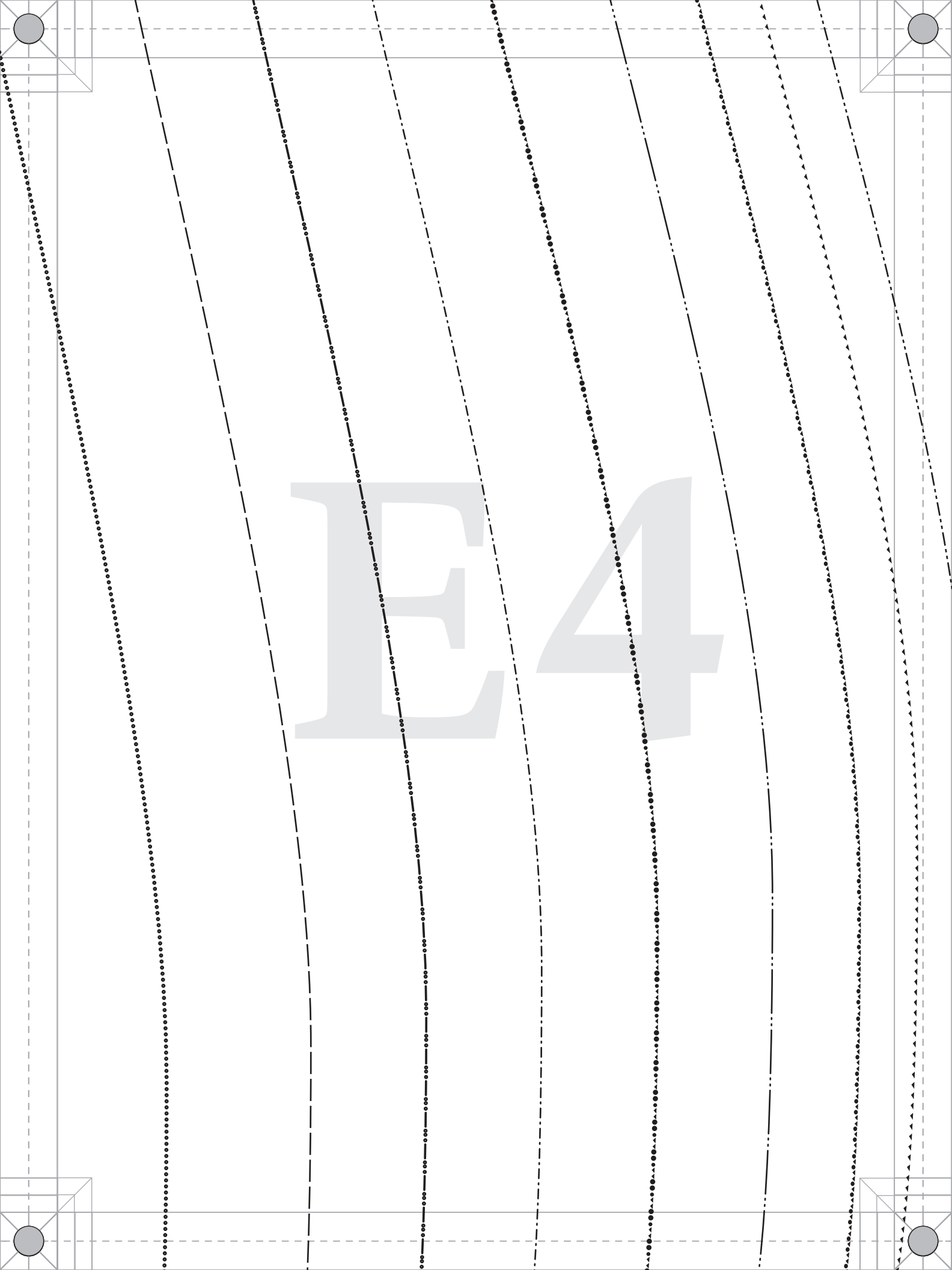
E4

E5

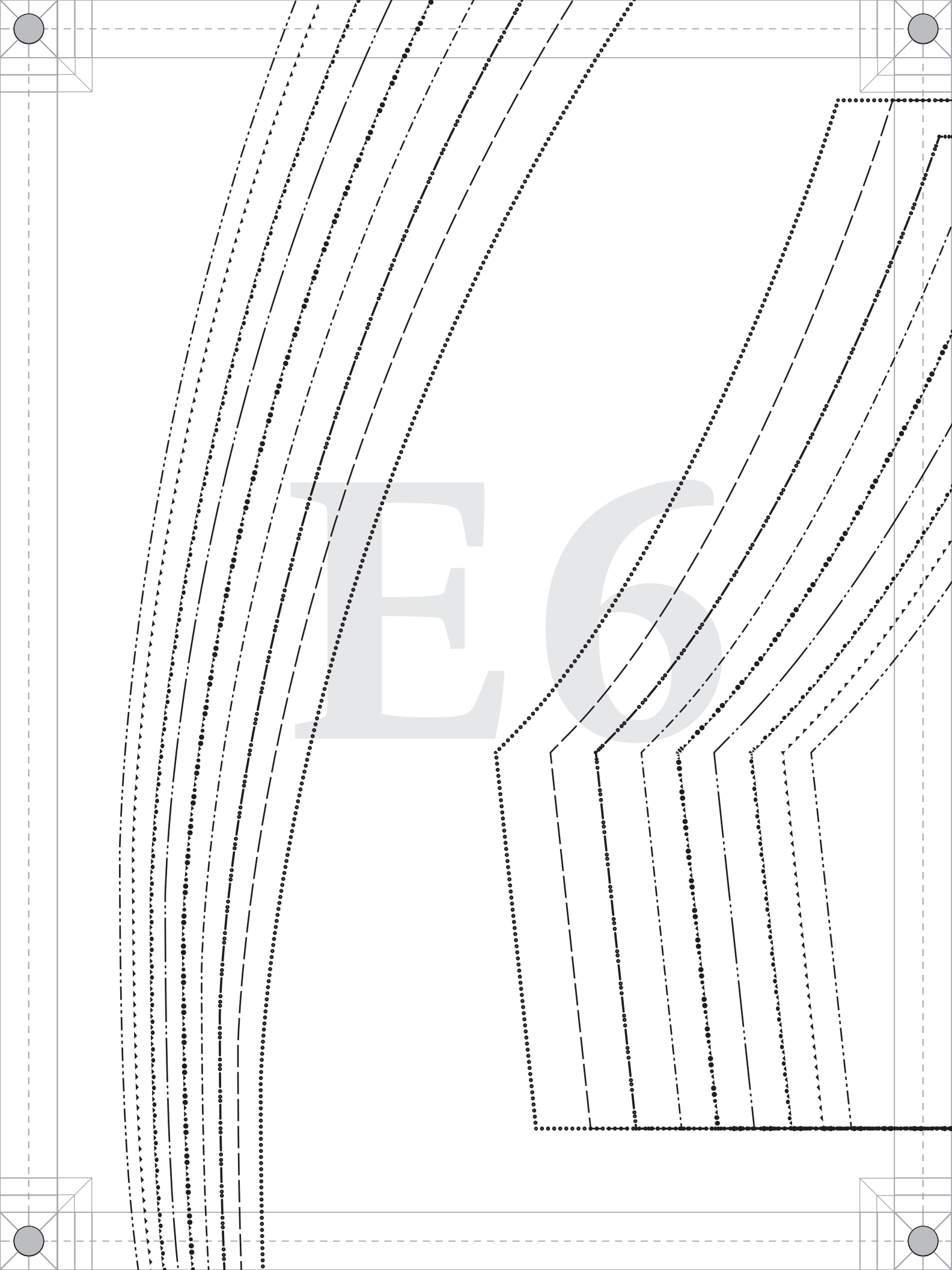

PATTERNS BY mood FABRICS

MDF471

#MoodTarrytownPattern

"The Tarrytown Tracksuit" MDF471

E - POCKET

Cut 1 on fold

Ladies Sizes XS to 5XL

1/2" seam allowances (SA's) included



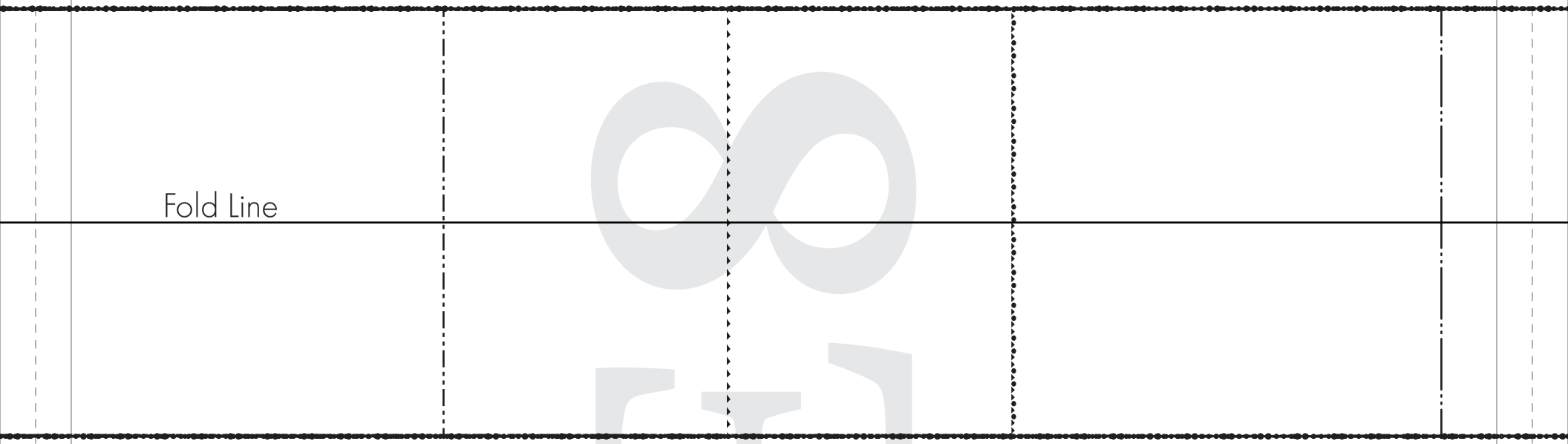
Fold Line

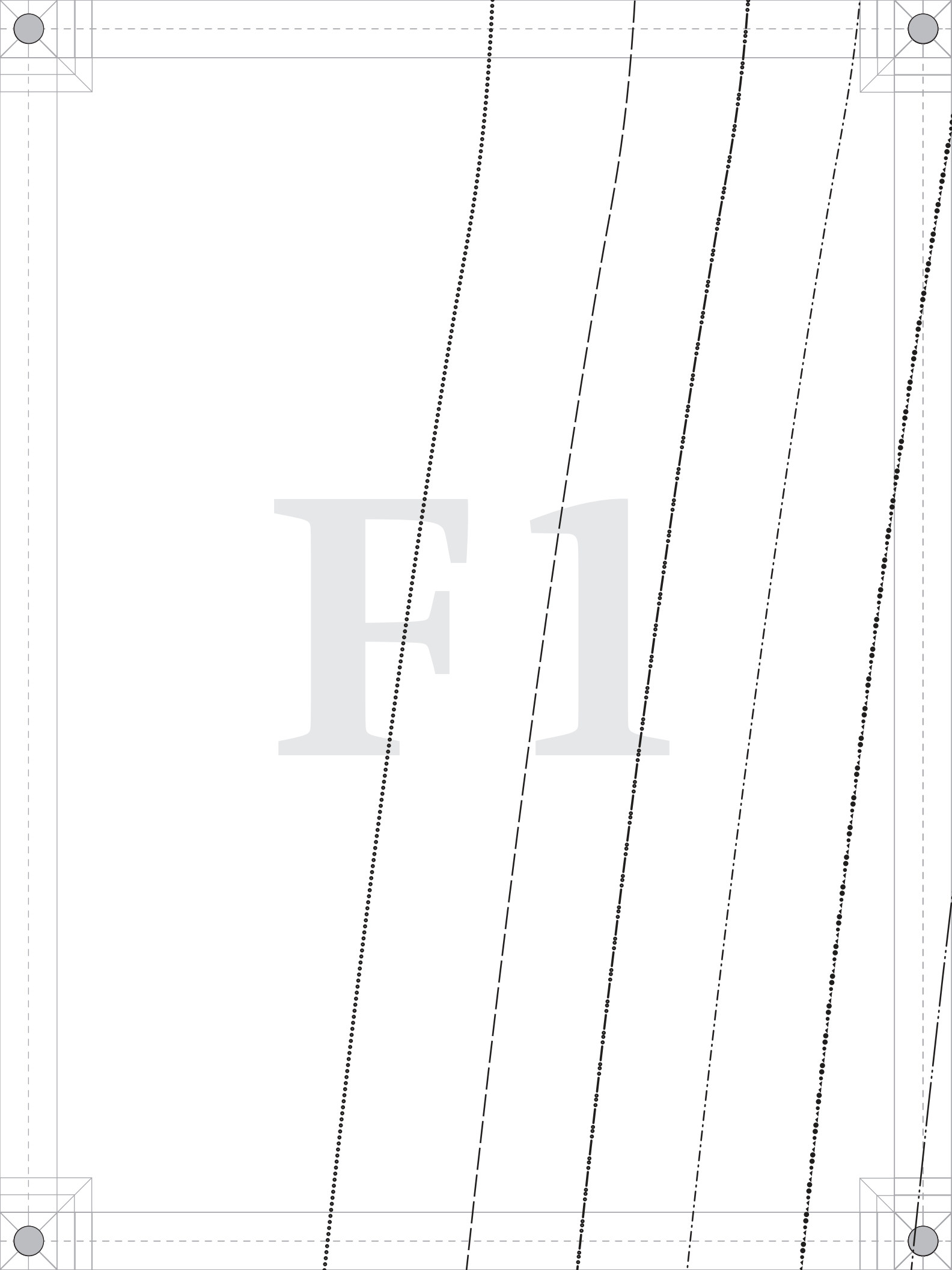
F1

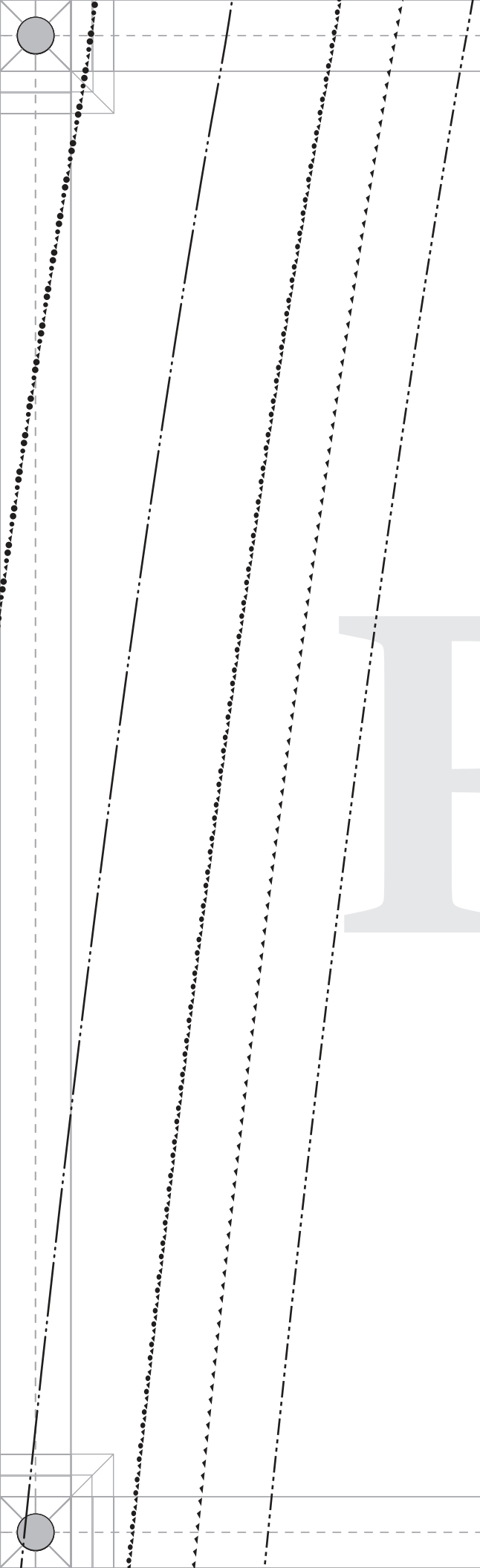

F2

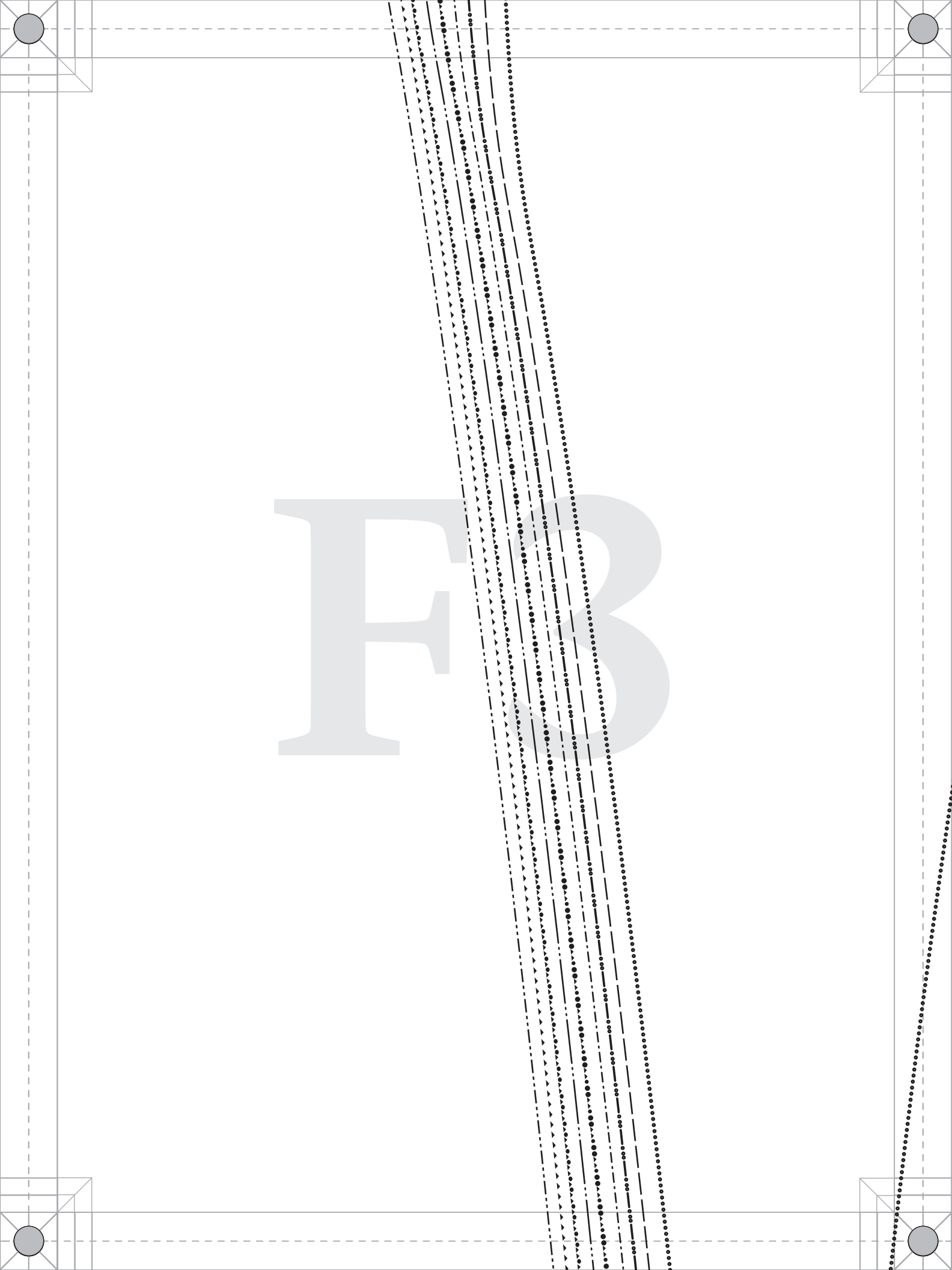

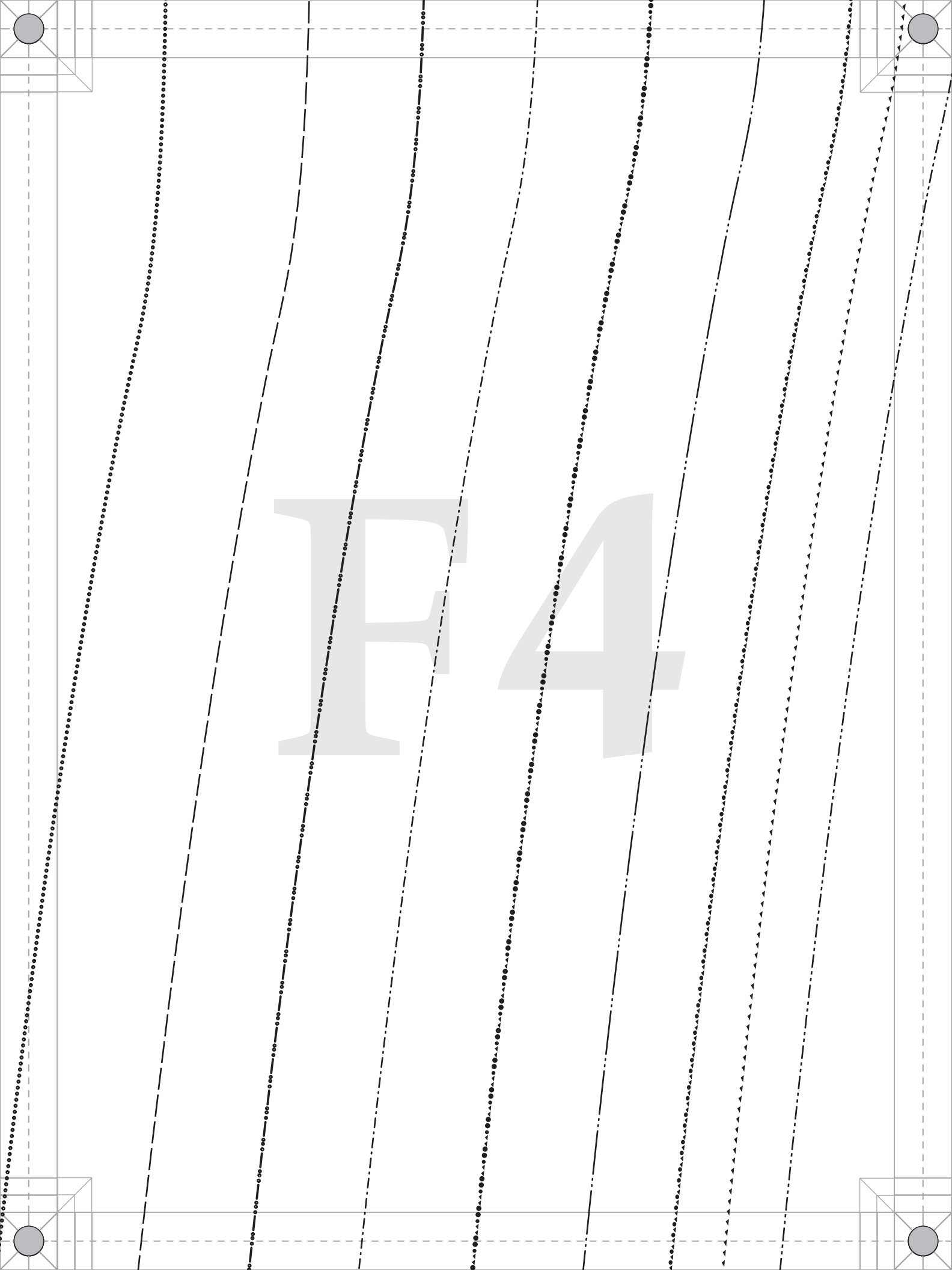
F4

F5

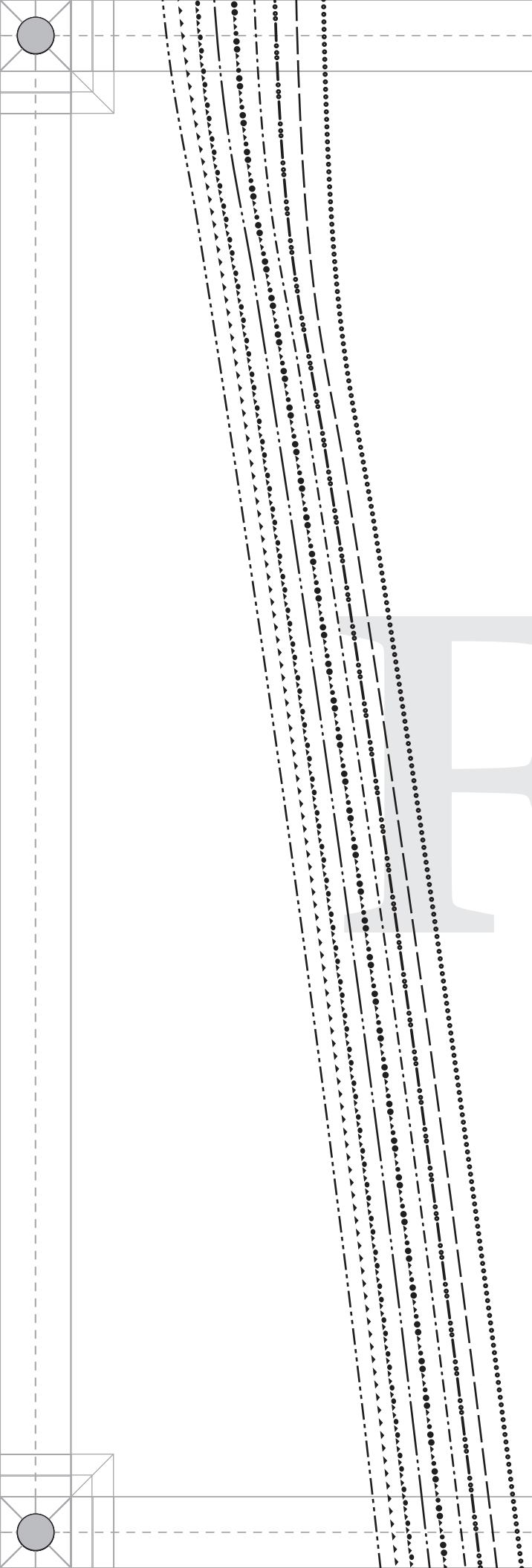

PATTERNS BY mood FABRICS MDF471

#MoodTarrytownPattern



Fold Line

"The Tarrytown Tracksuit"
MDF471

F - SLEEVE CUFFS

Cut 2

Ladies Sizes XS to 5XL

1/2" seam allowances (SA's) included

F8


G1

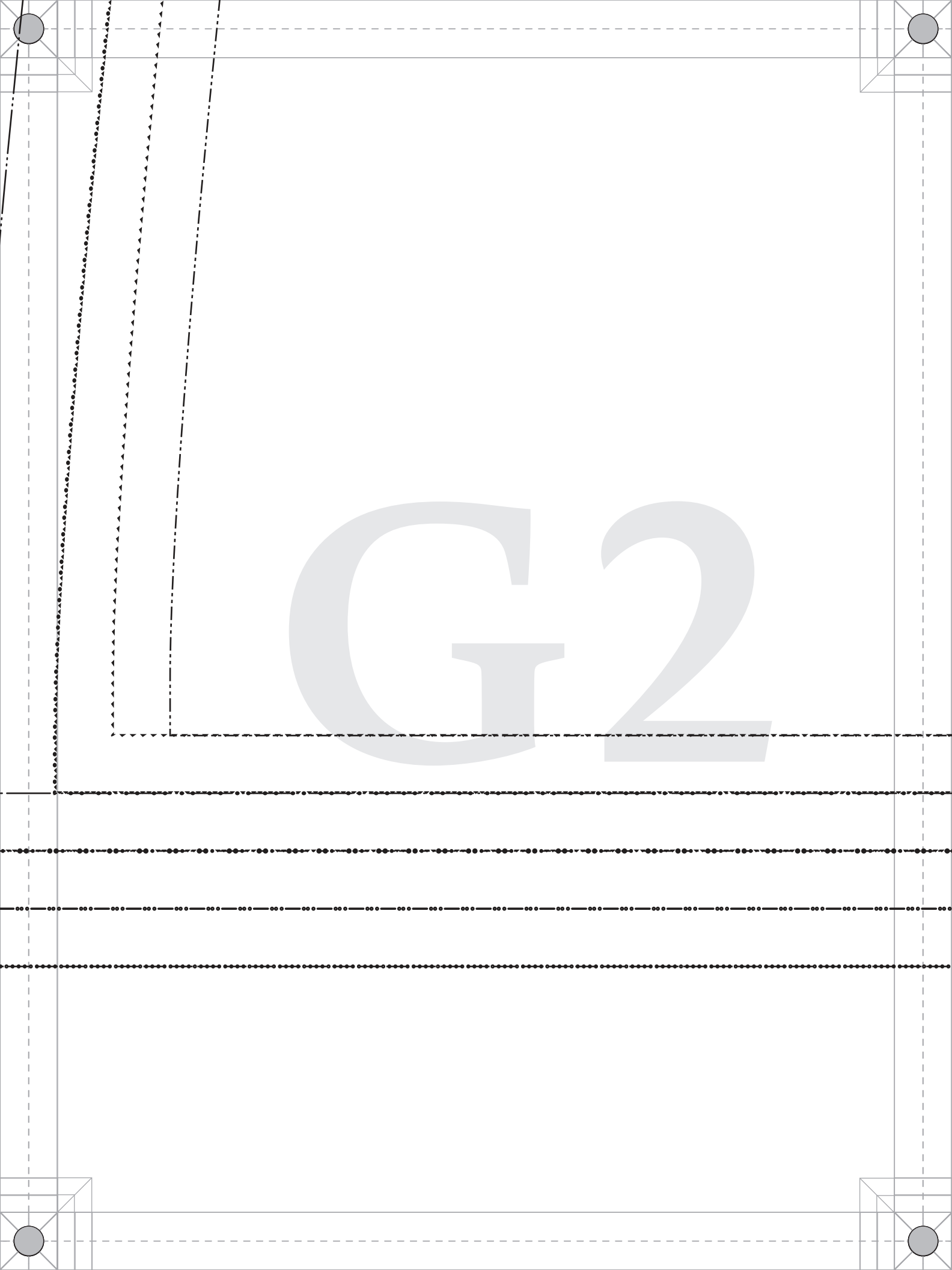
G2

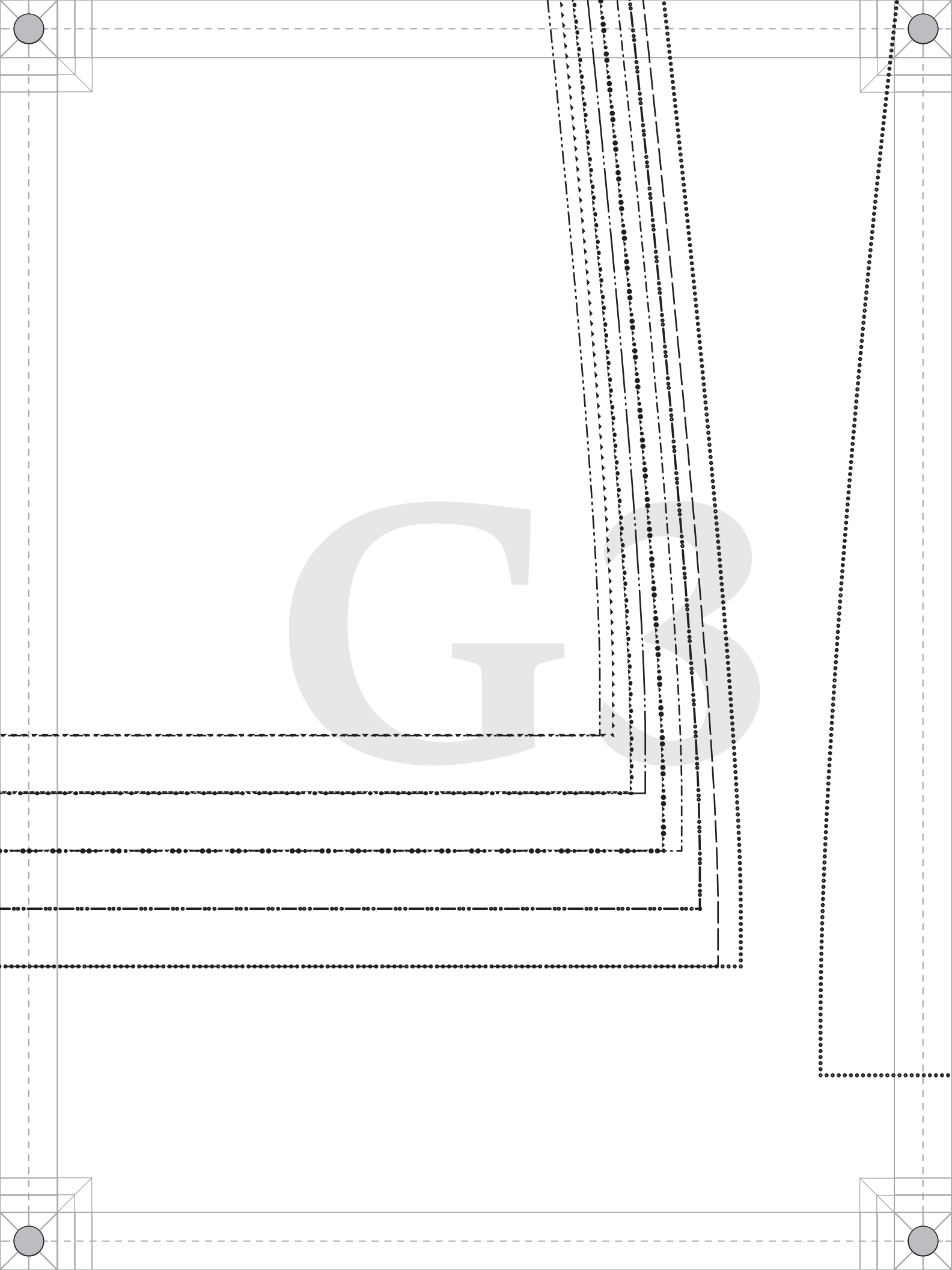

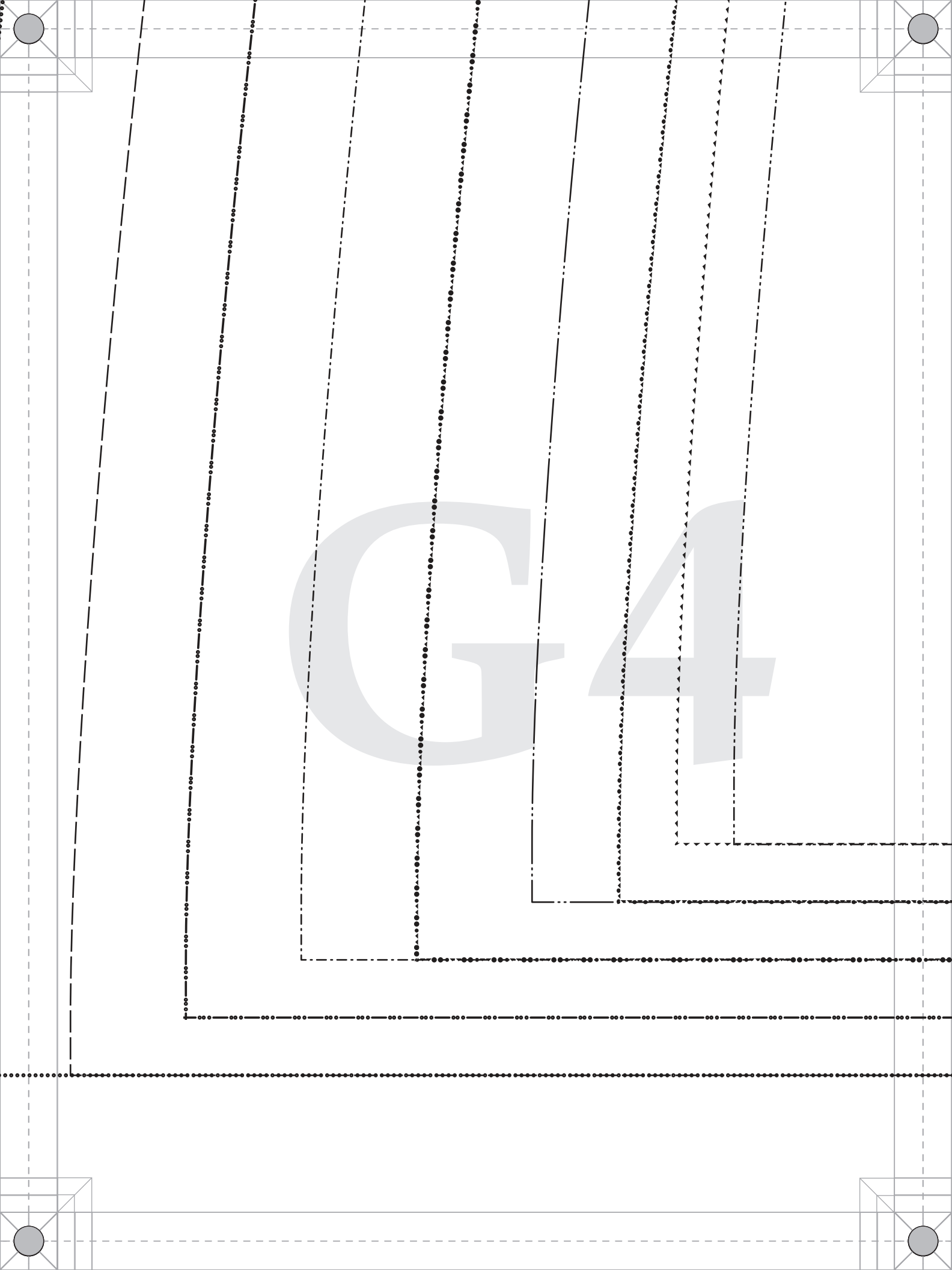
G4

G5

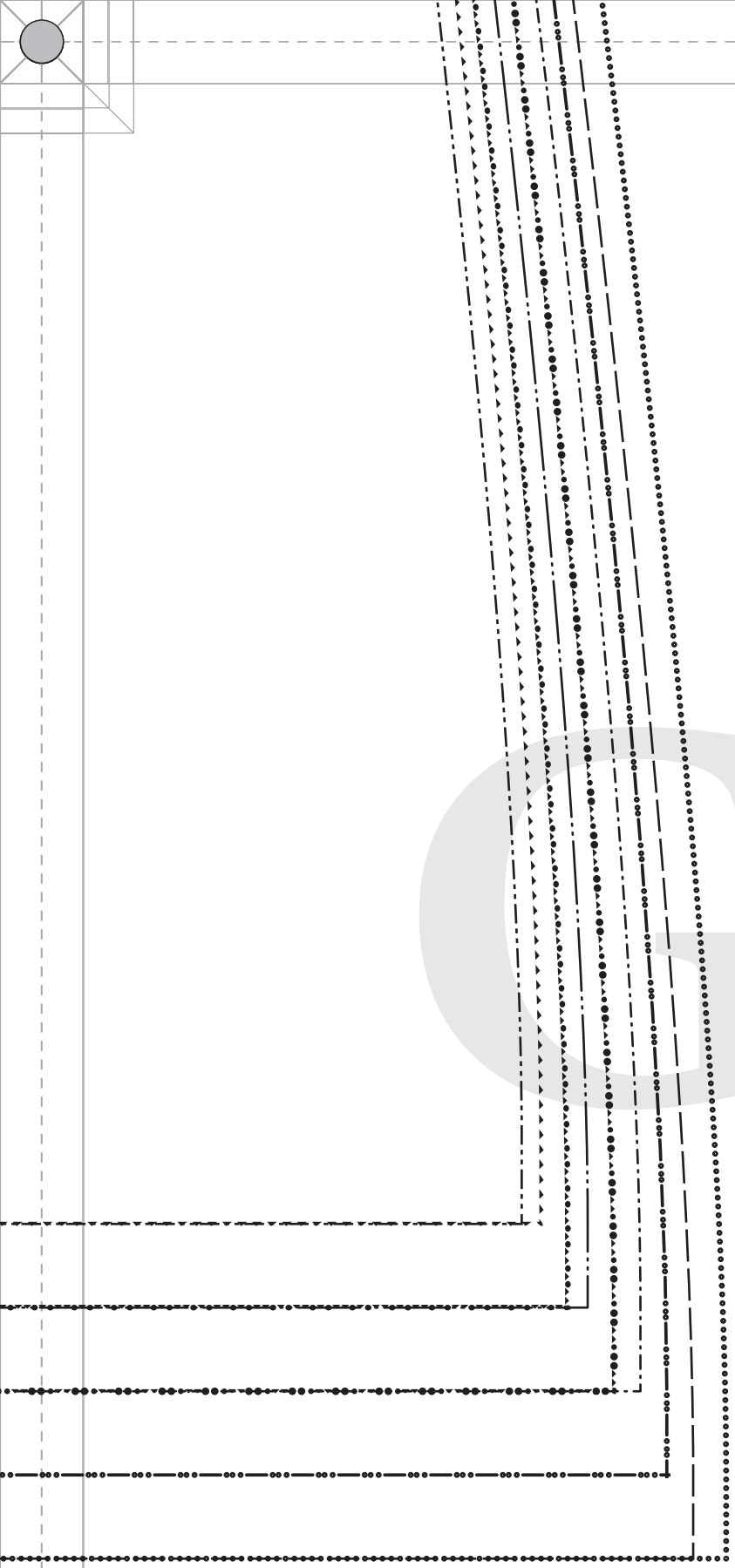

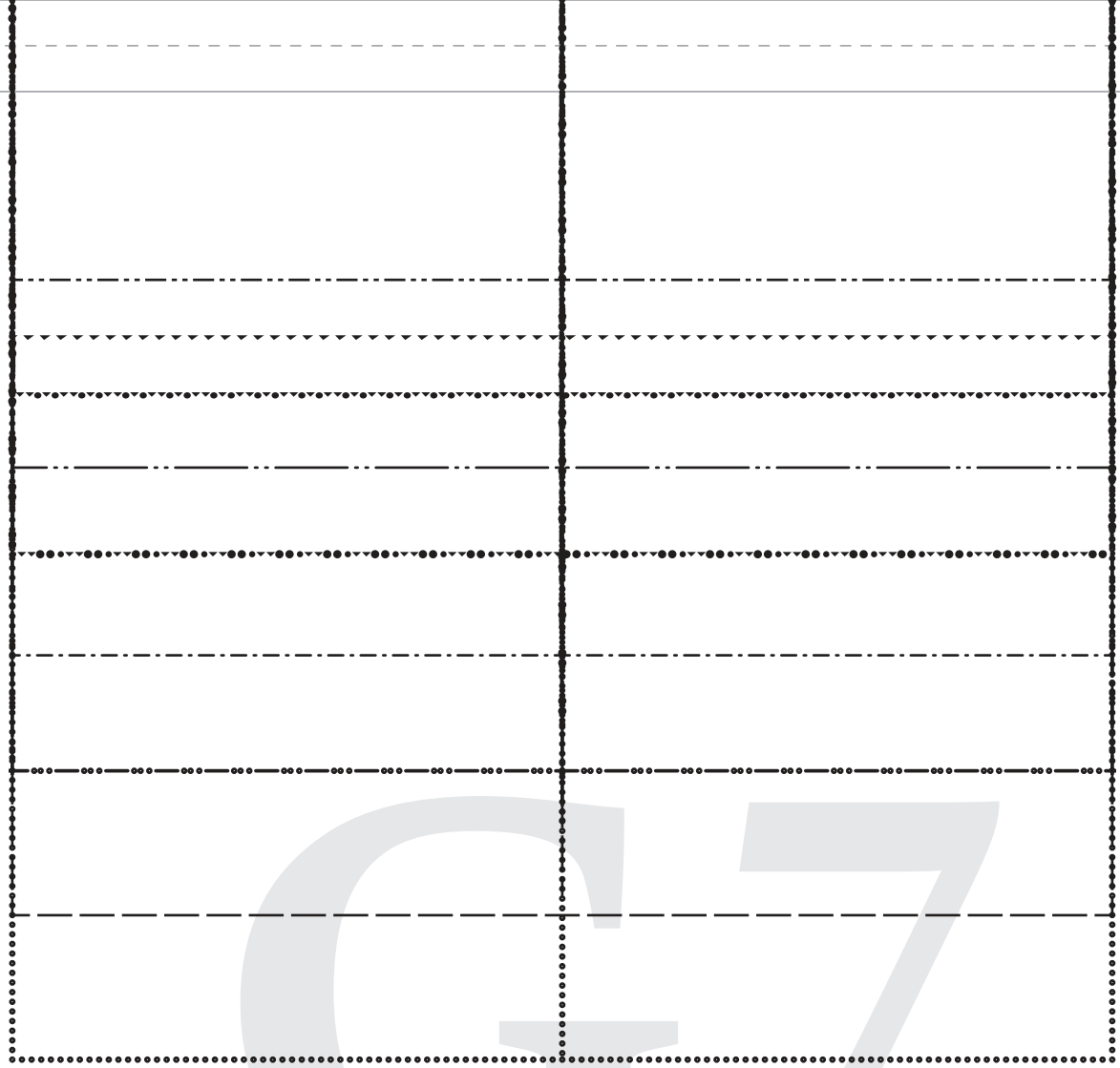

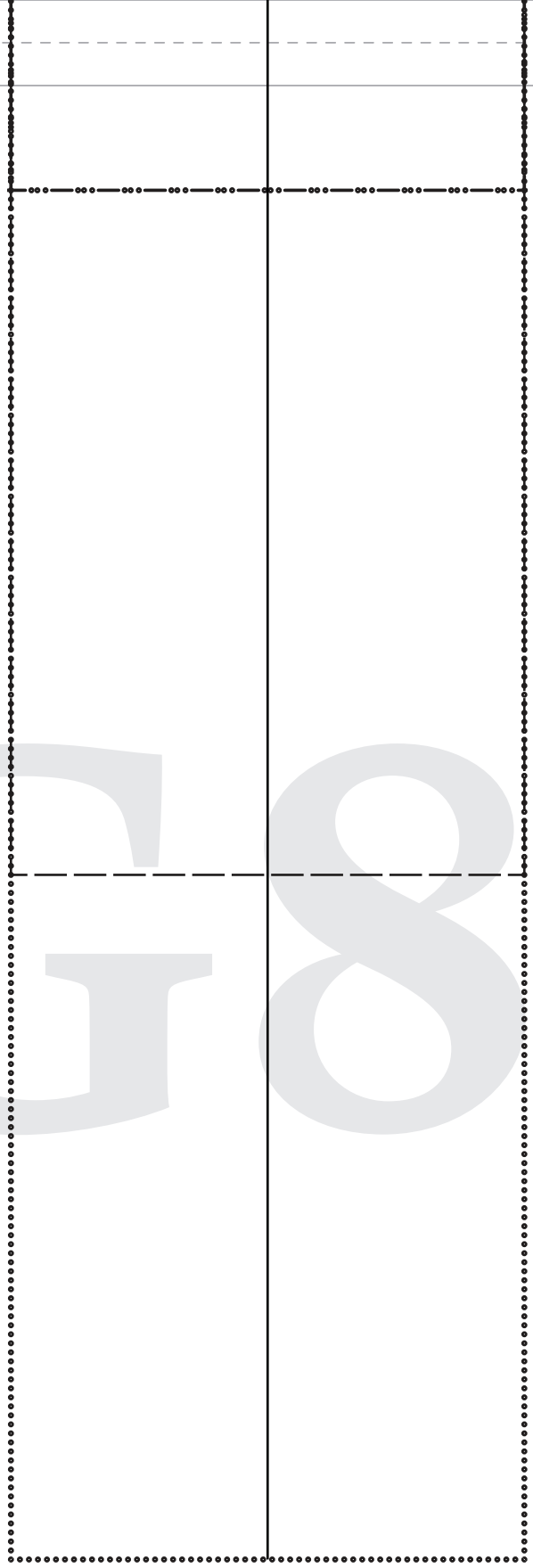
G8

PATTERNS BY mood FABRICS MDF471

#MoodTarrytownPattern

"The Tarrytown Tracksuit" MDF471

G - TOP WAISTBAND

Cut 1

Ladies Sizes XS to 5XL

1/2" seam allowances (SA's) included



H2

Fold Line

H3

H4

H5

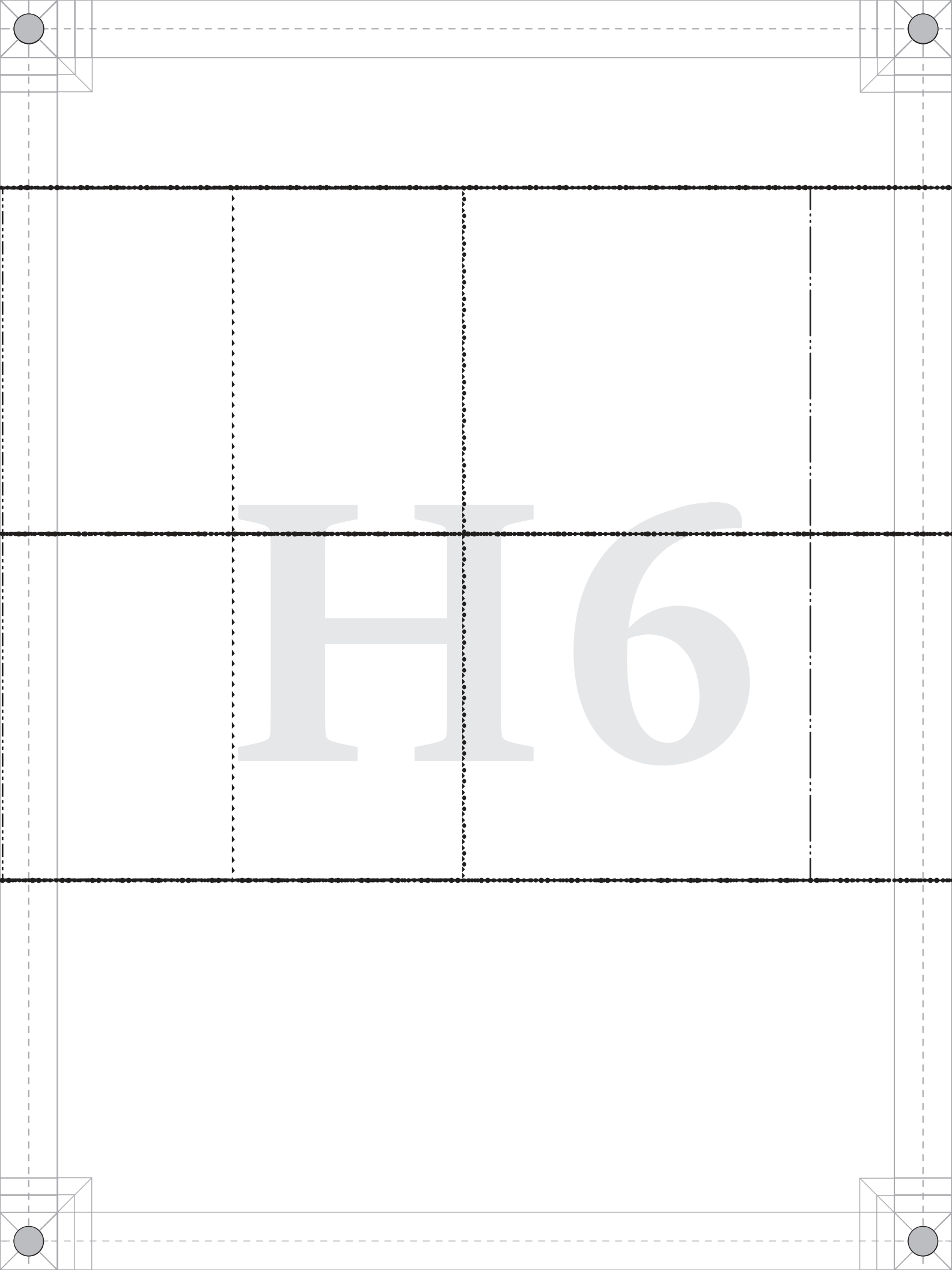
H6

H7

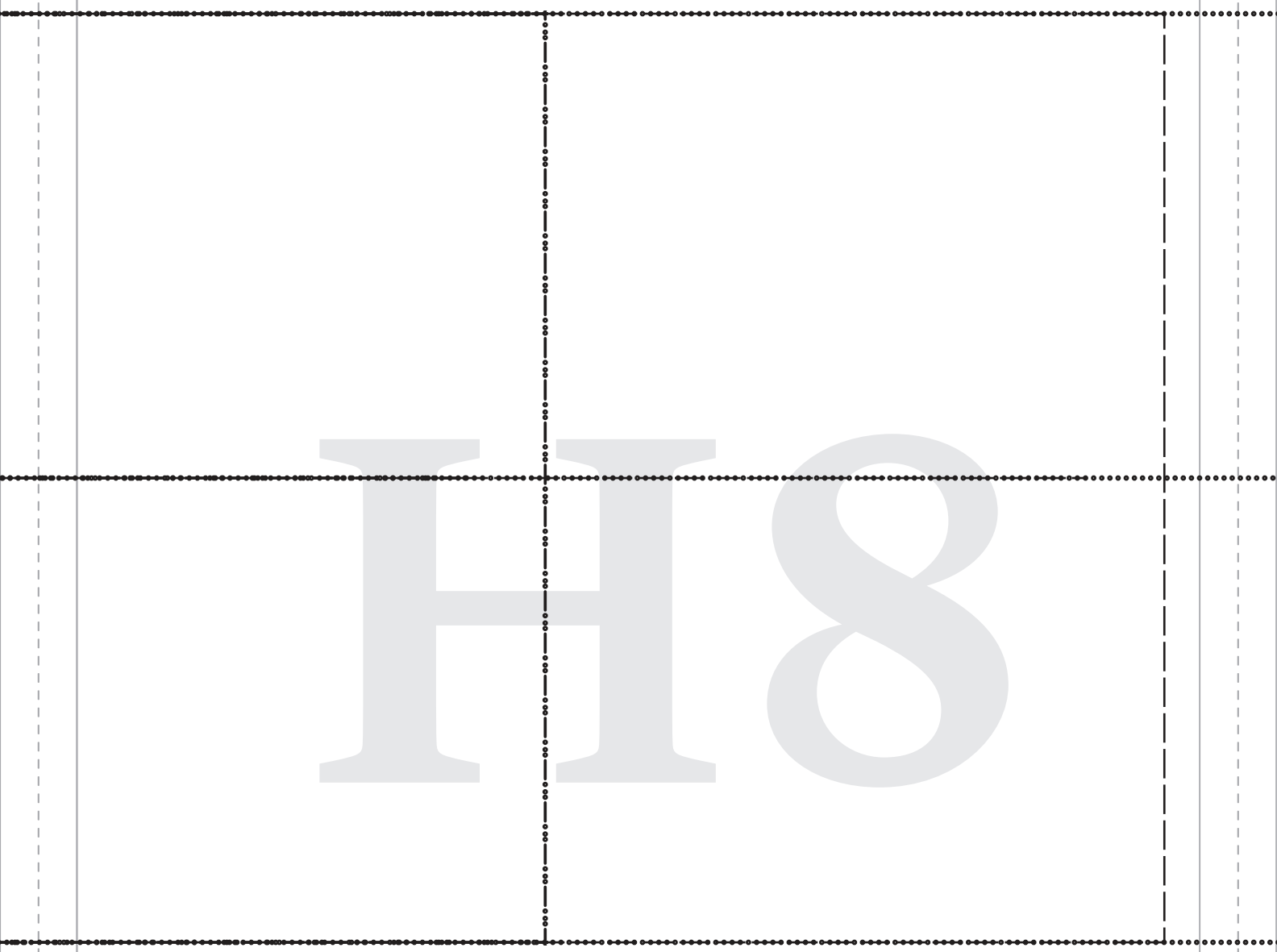
H8

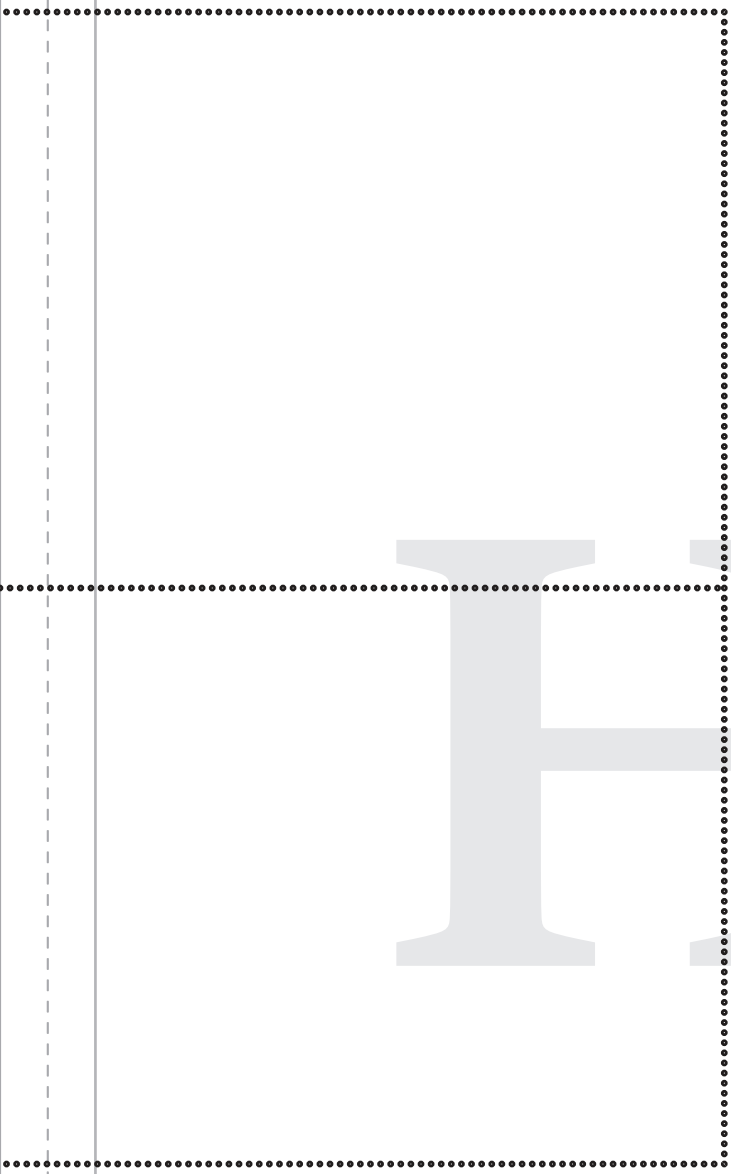

H9