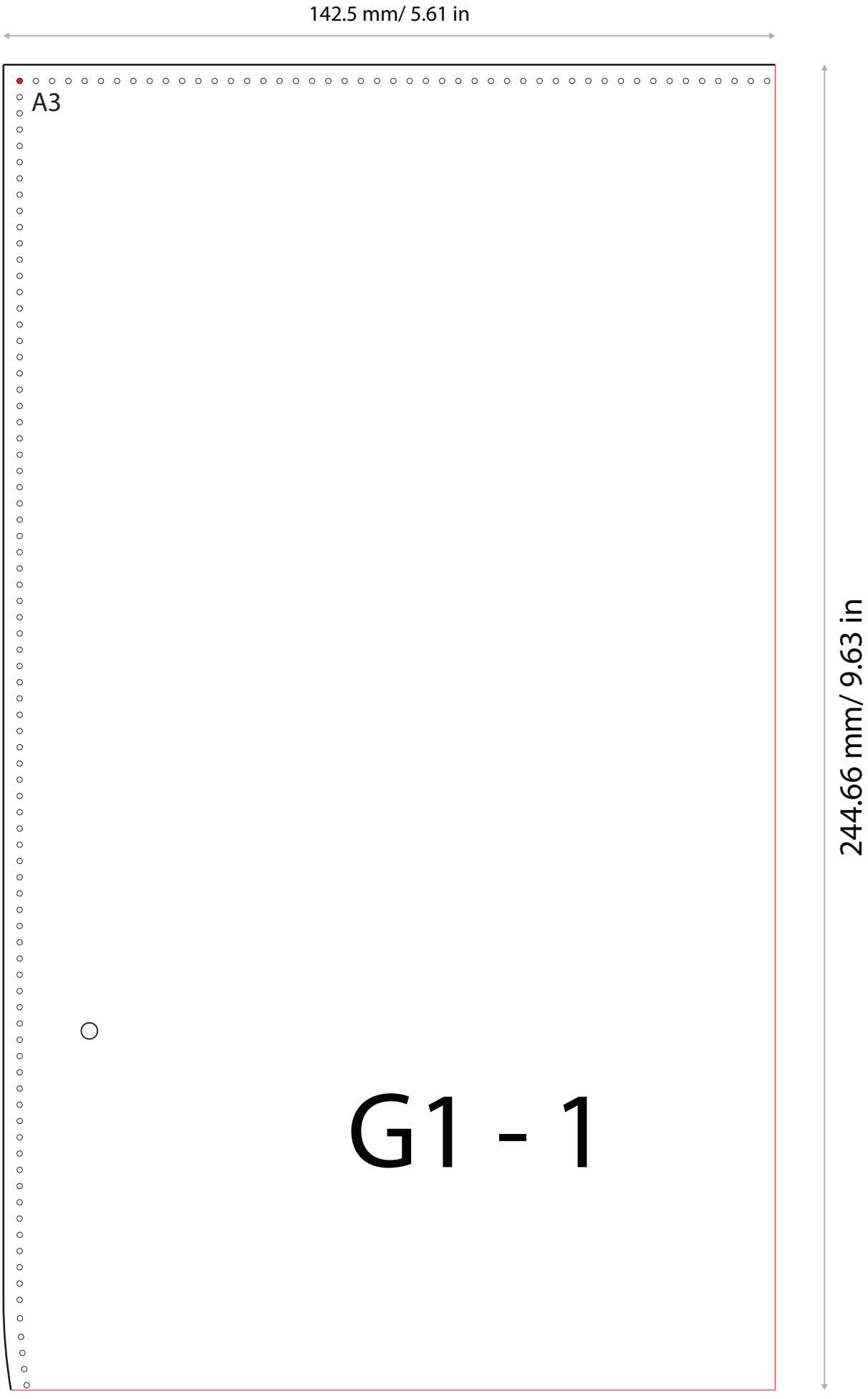
142.5 mm/ 5.61 in
A3
244.66 mm/ 9.63 in
G1 - 1
20mm
1 inch

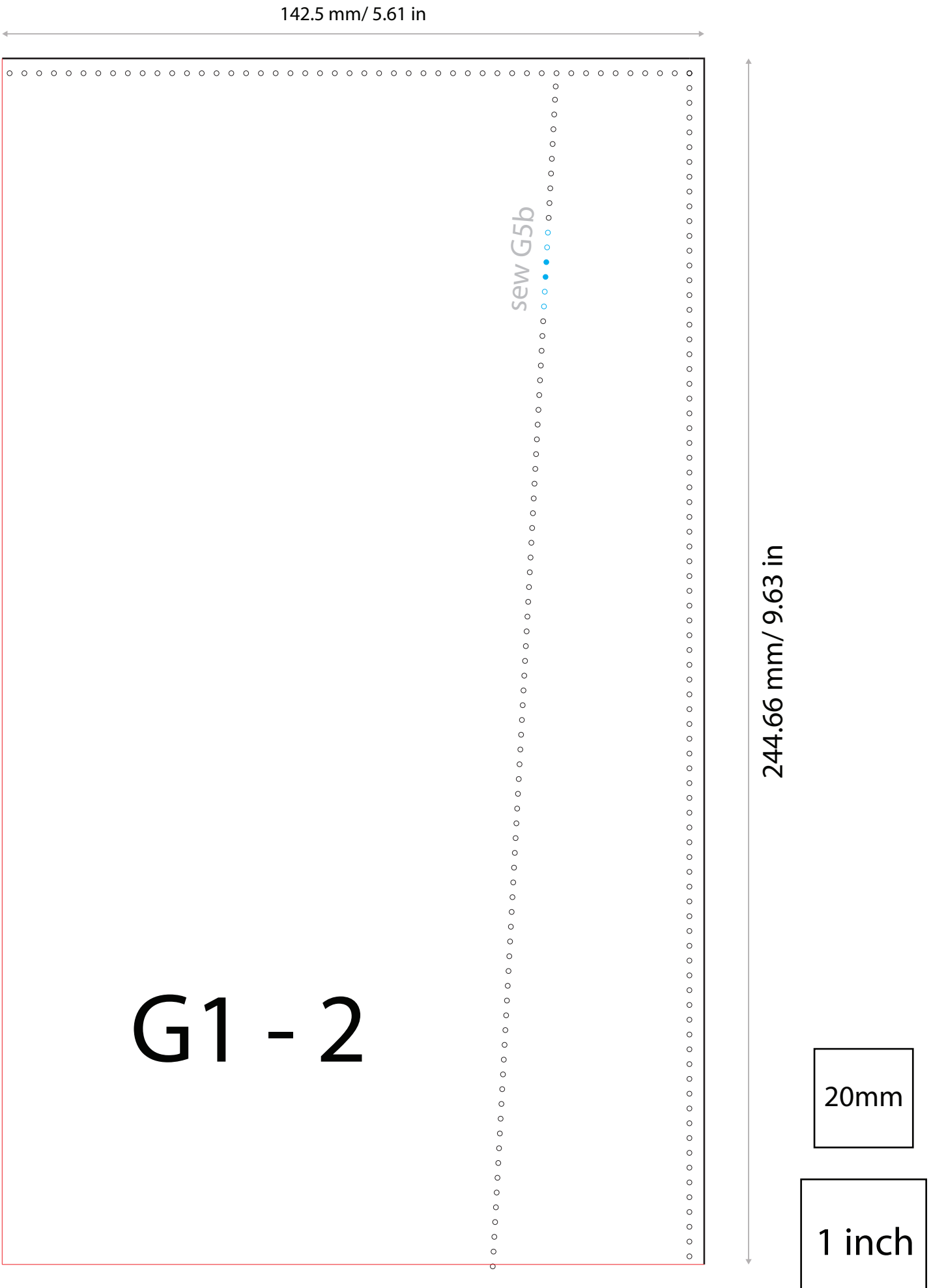
142.5 mm/ 5.61 in
sew G5b
244.66 mm/ 9.63 in
G1 - 2
20mm
1 inch

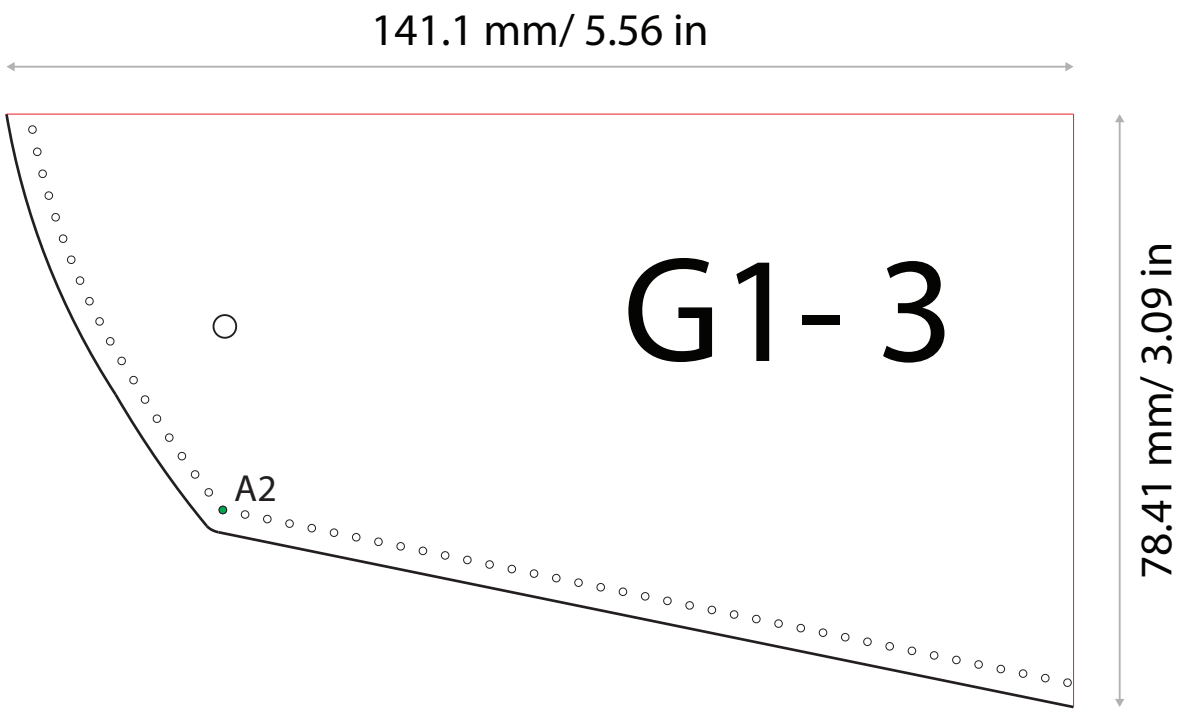

20mm

1 inch

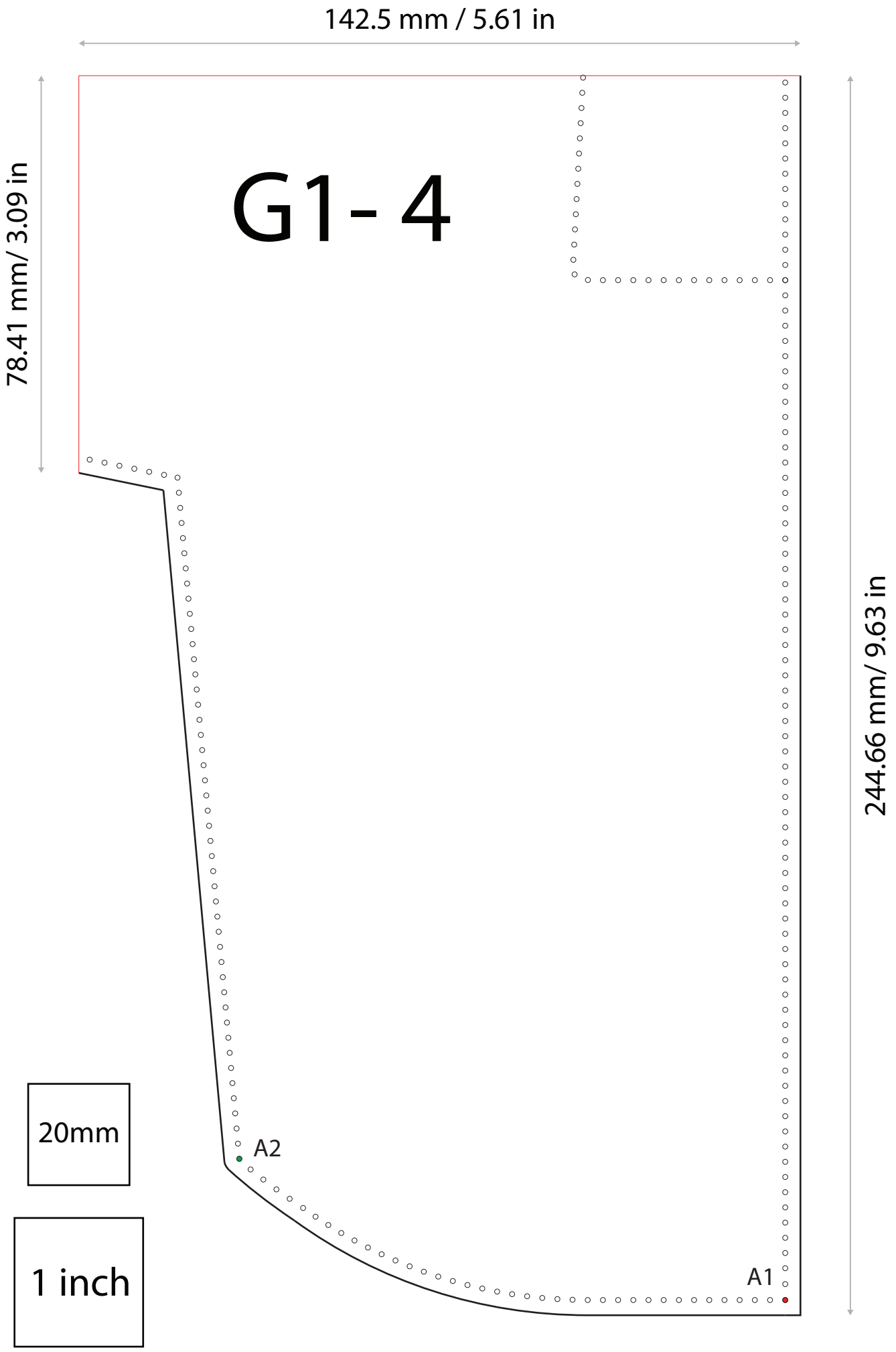
142.5 mm / 5.61 in
78.41 mm/ 3.09 in
G1- 4
244.66 mm/ 9.63 in
20mm
1 inch
A2
A1

142.5 mm/ 5.61 in

244.66 mm/ 9.63 in

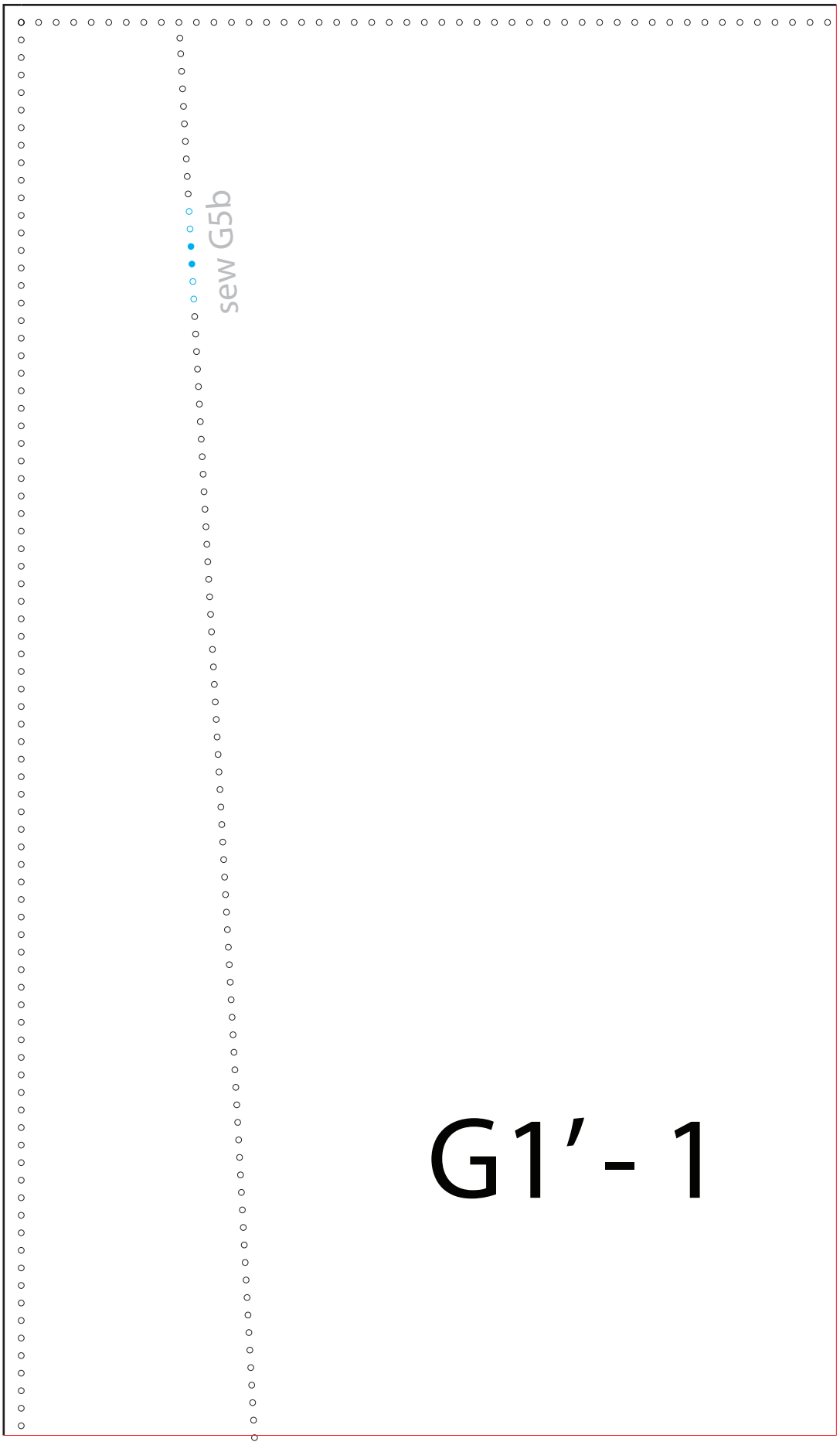

G1’- 1

20mm

1 inch

142.5 mm/ 5.61 in

244.66 mm/ 9.63 in

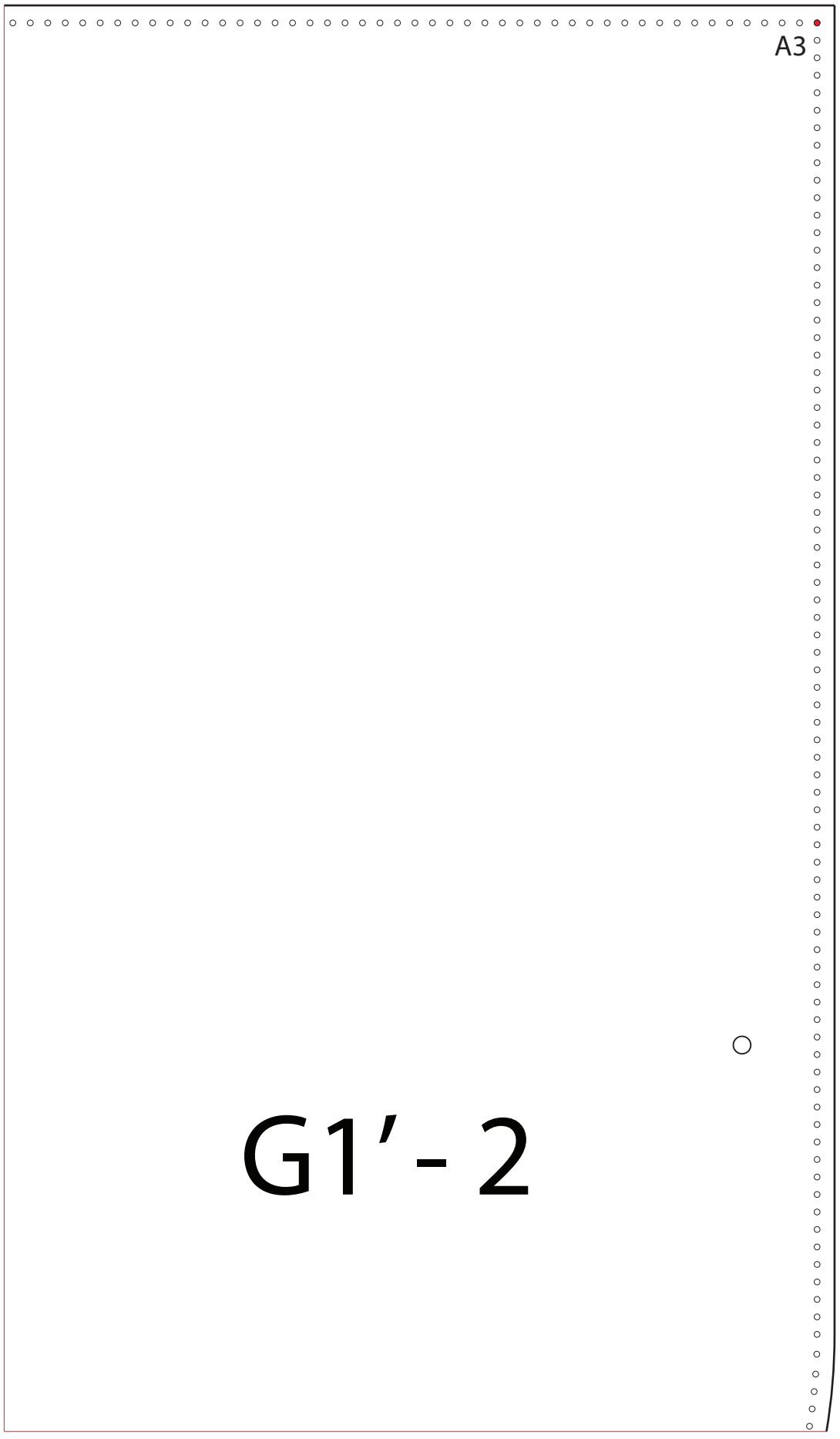

20mm

1 inch

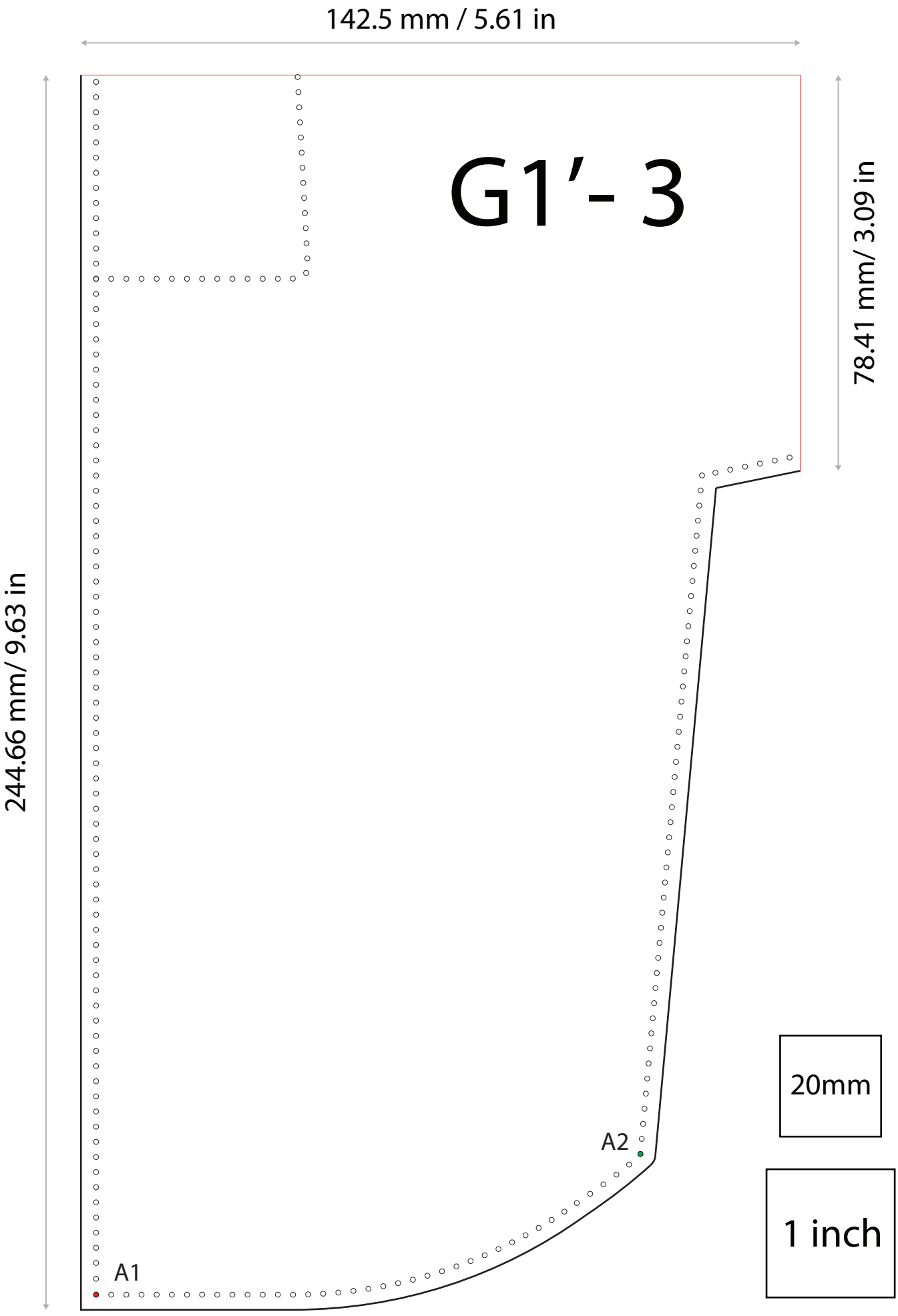
142.5 mm / 5.61 in
G1’- 3
78.41 mm/ 3.09 in
244.66 mm/ 9.63 in
A1
A2
20mm
1 inch

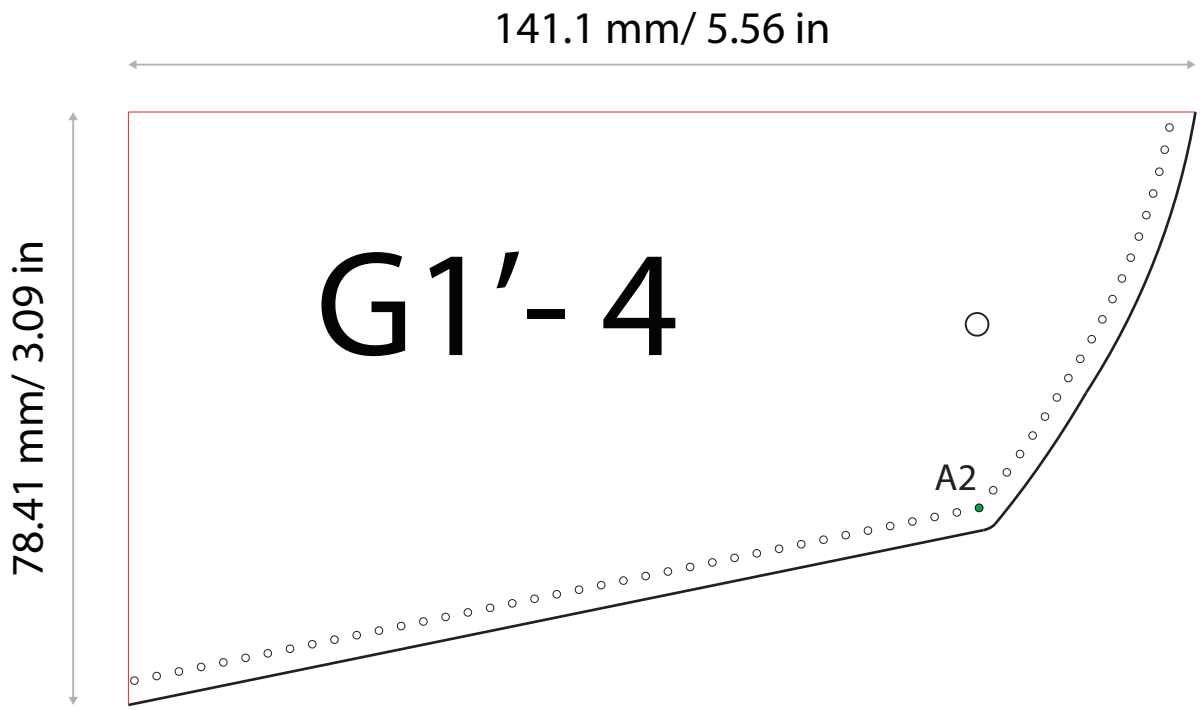

20mm

1 inch

60 mm/ 2.36 in

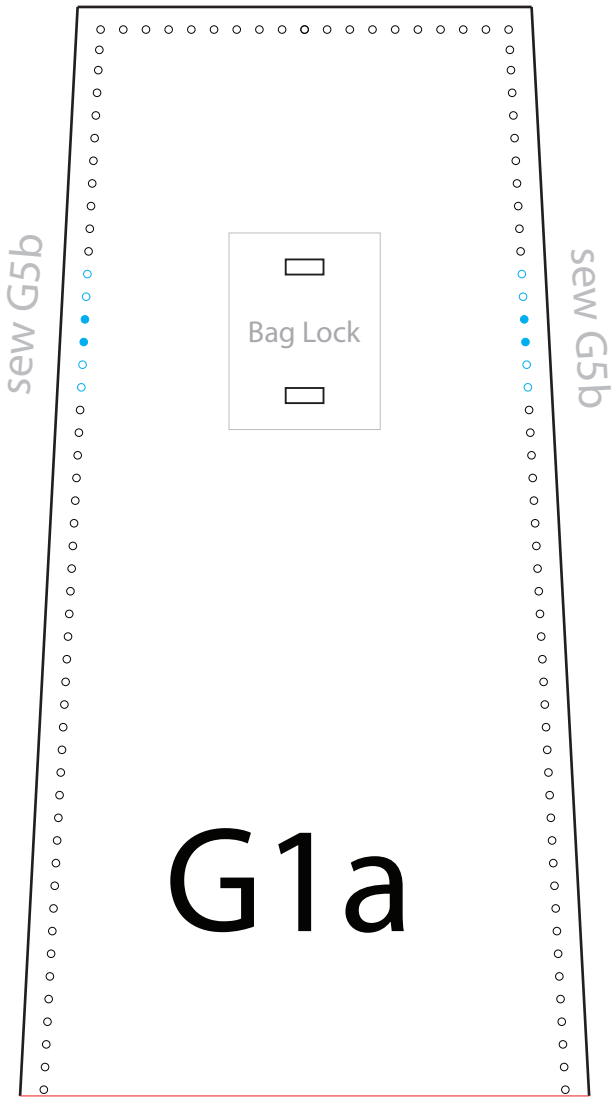

20mm

1 inch

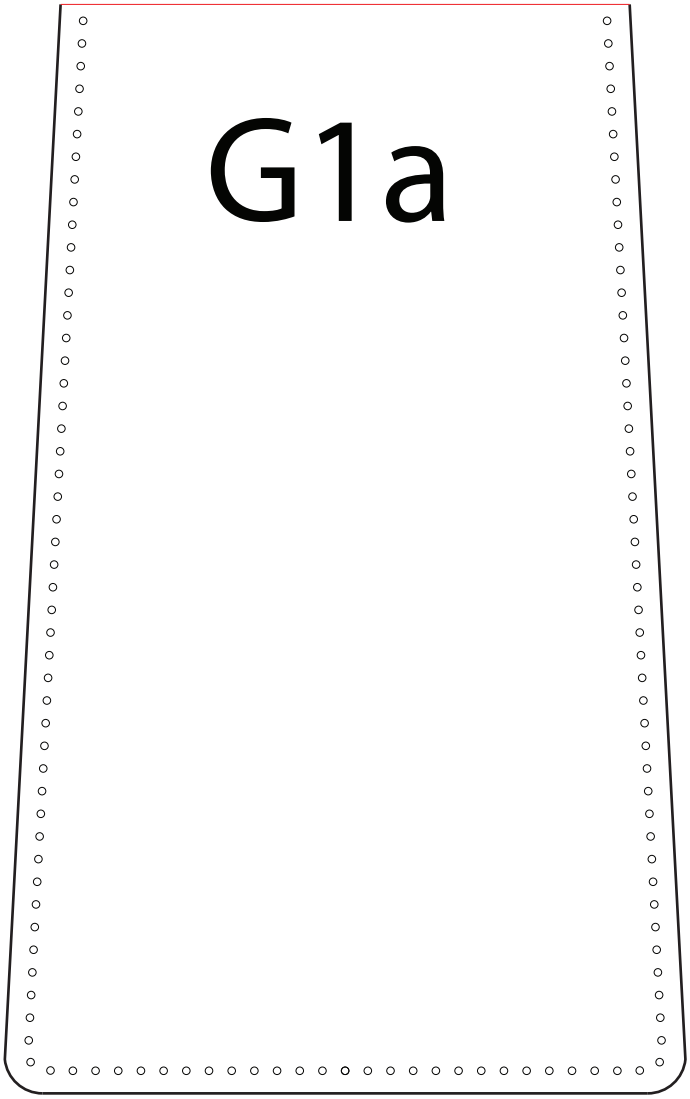

90 x 144 mm
3.54 x 5.66 in

G5b

66 x 21 mm
2.59 x 0.82 in

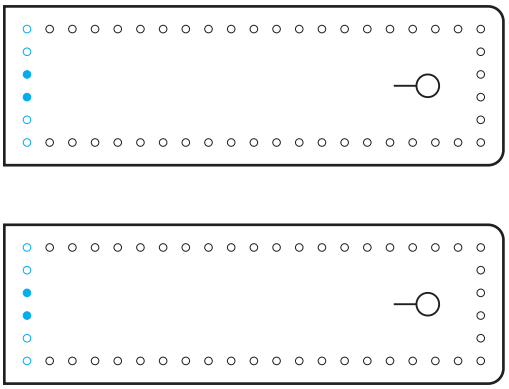

G5a

51 x 21 mm
2 x 0.82 in

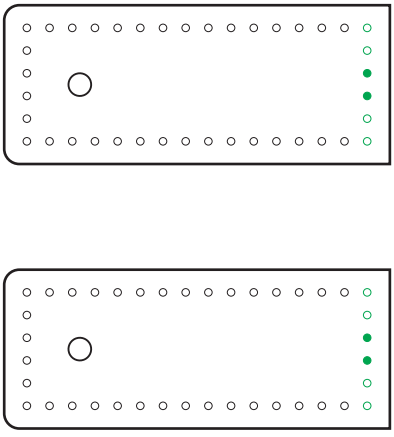

20mm

1 inch

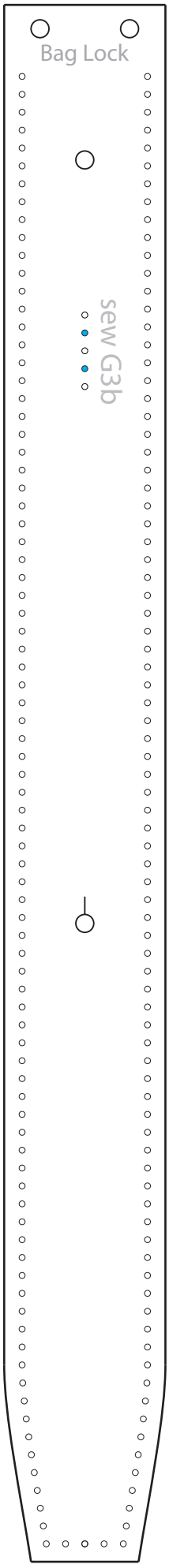

G4

27 x 261 mm
1.06 x 10.27 in

G3b

90 x 6 mm
3.54 x 0.23 in

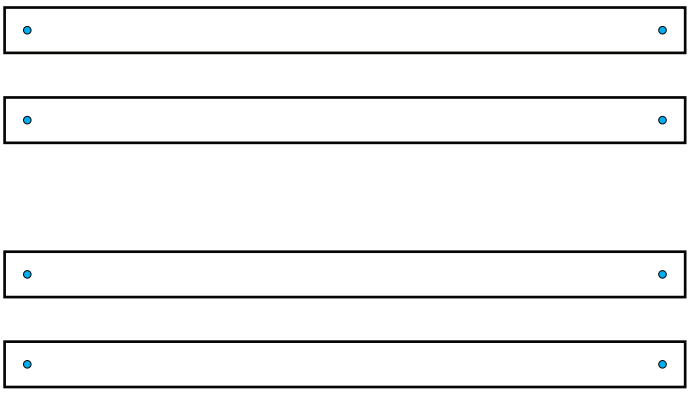

20mm

1 inch

G6

39 x 21 mm
1.53 x 0.82 in

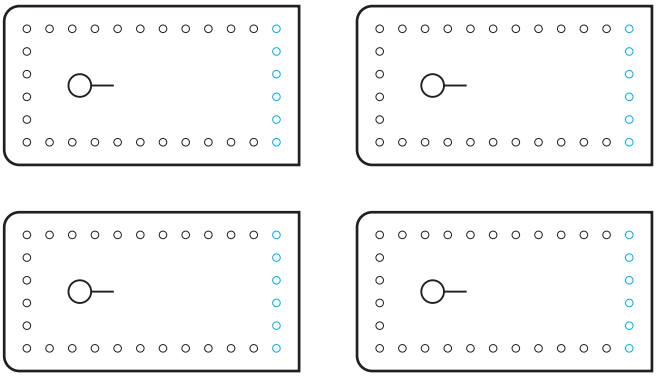

G7

30 x 24 mm
1.18 x 0.94 in

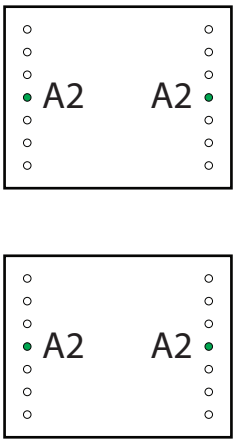

20mm

1 inch

20mm

1 inch

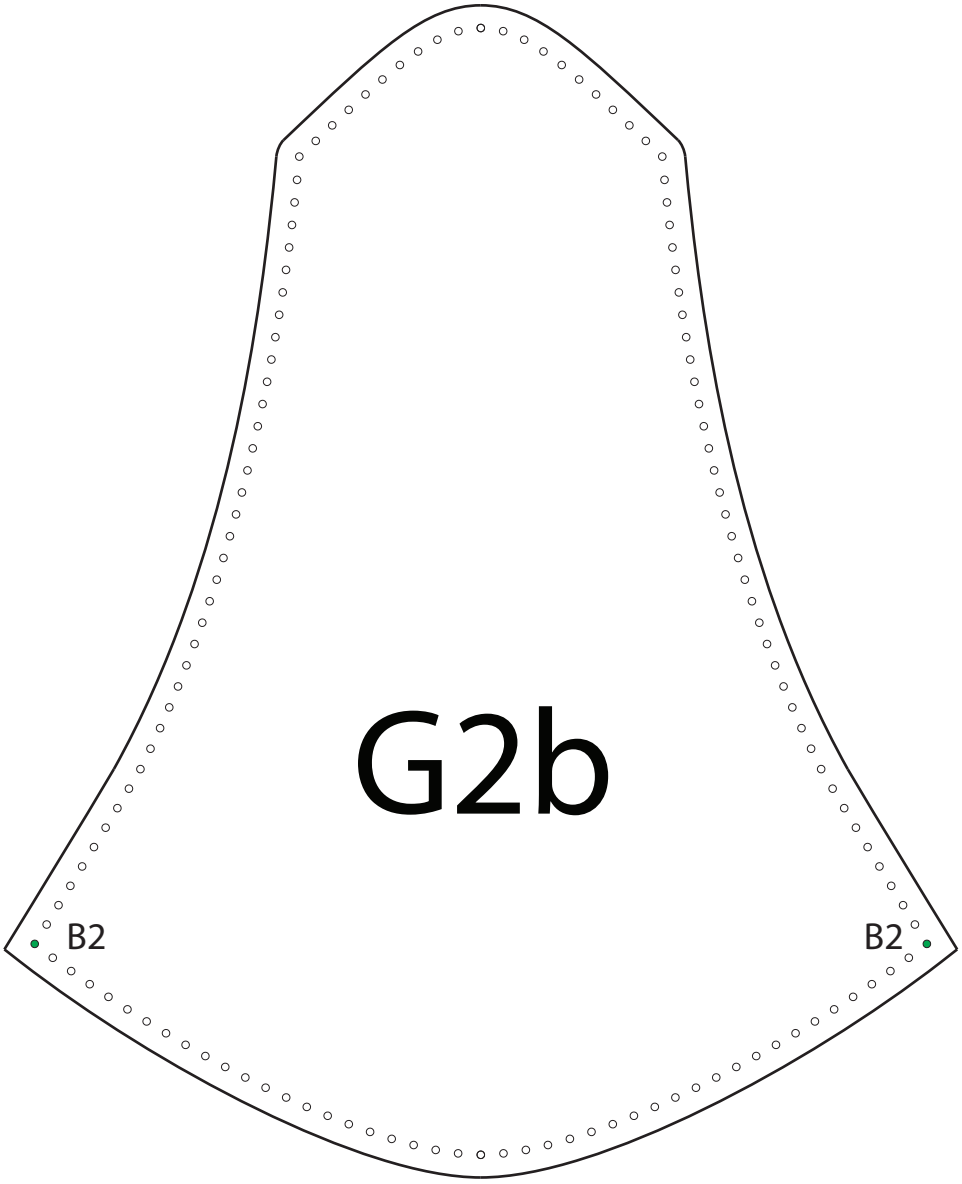

276 x 163.5 mm
10.86 x 6.43 in

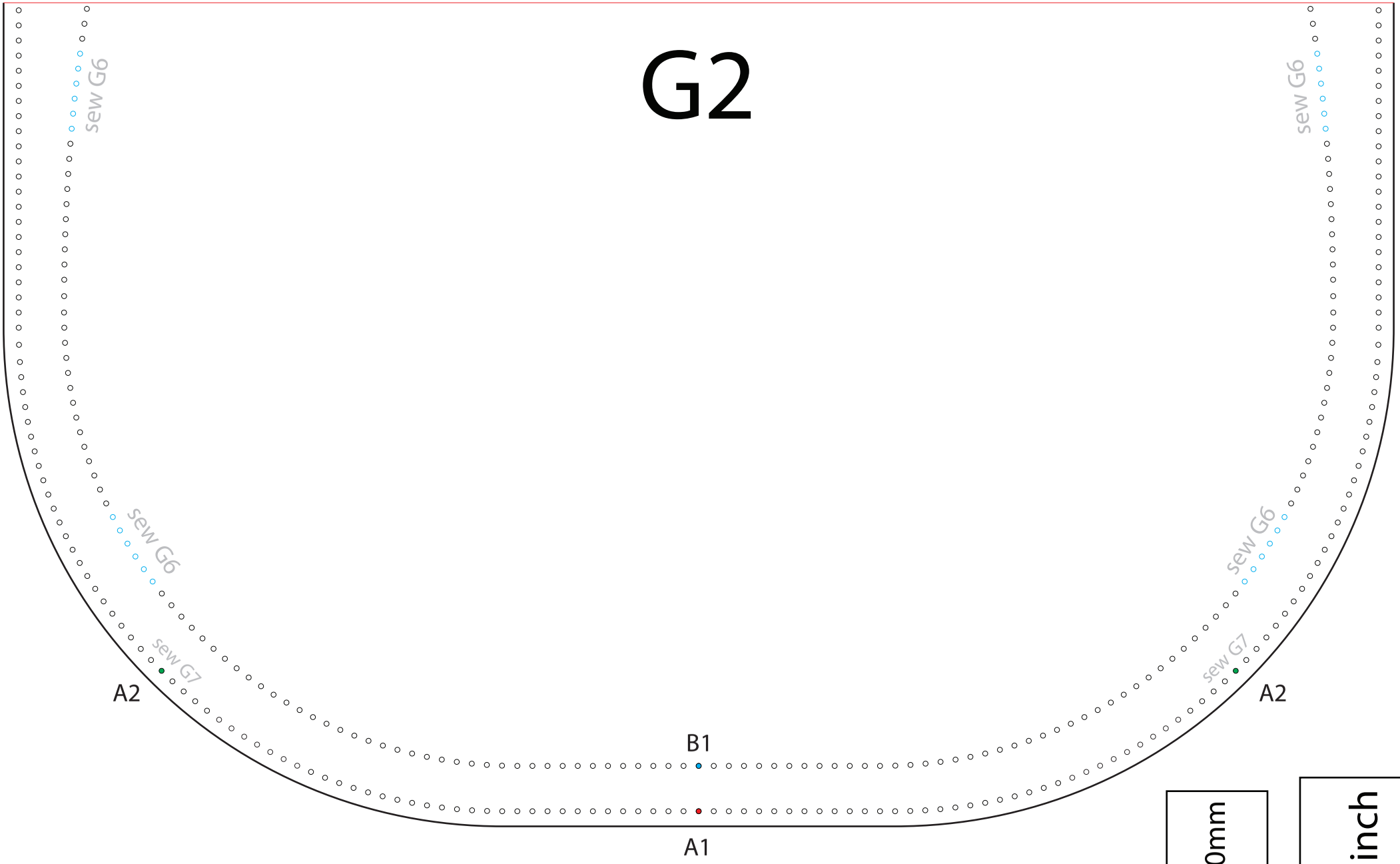

276 x 163.5 mm
10.86 x 6.43 in

20mm

1 inch

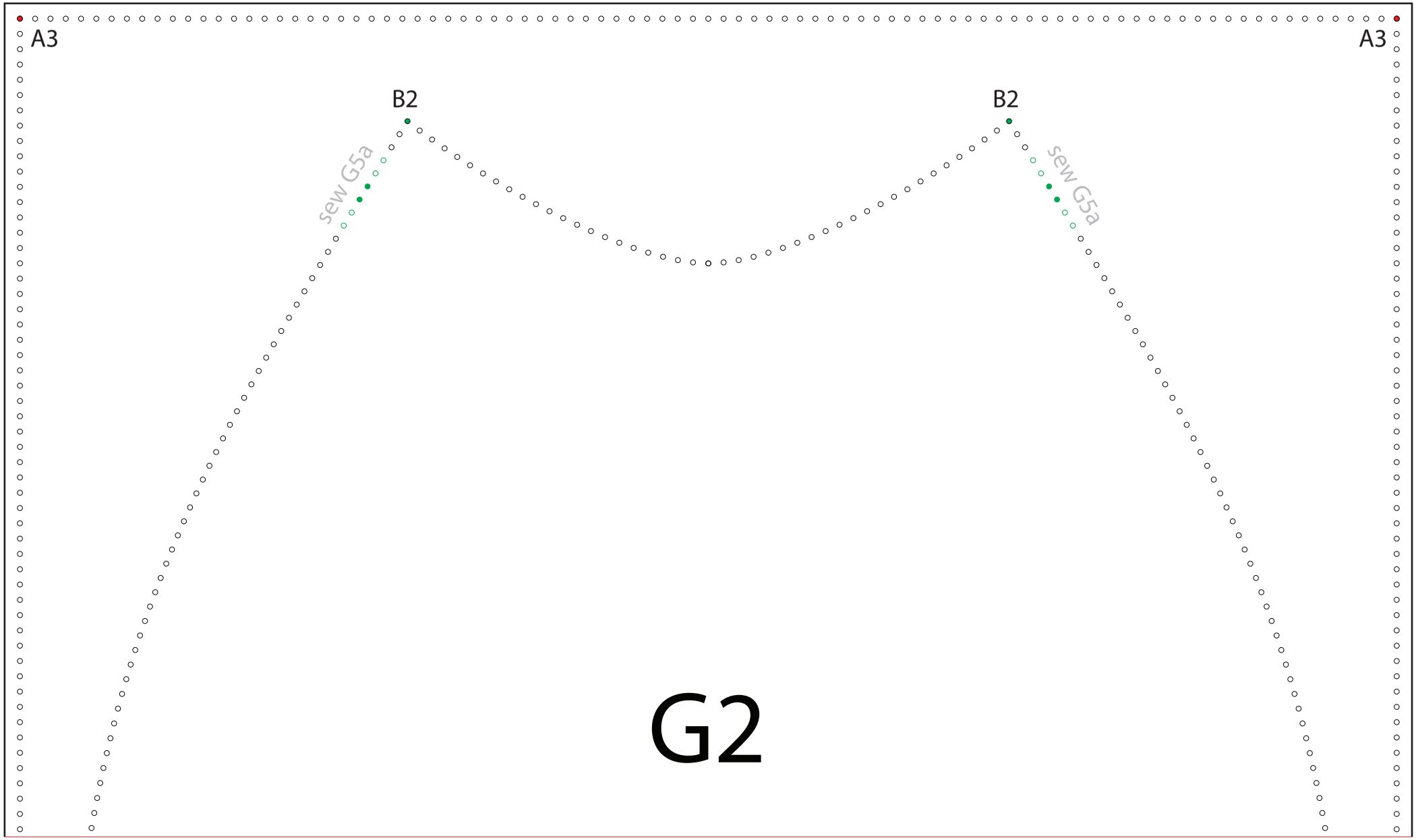

20mm

1 inch

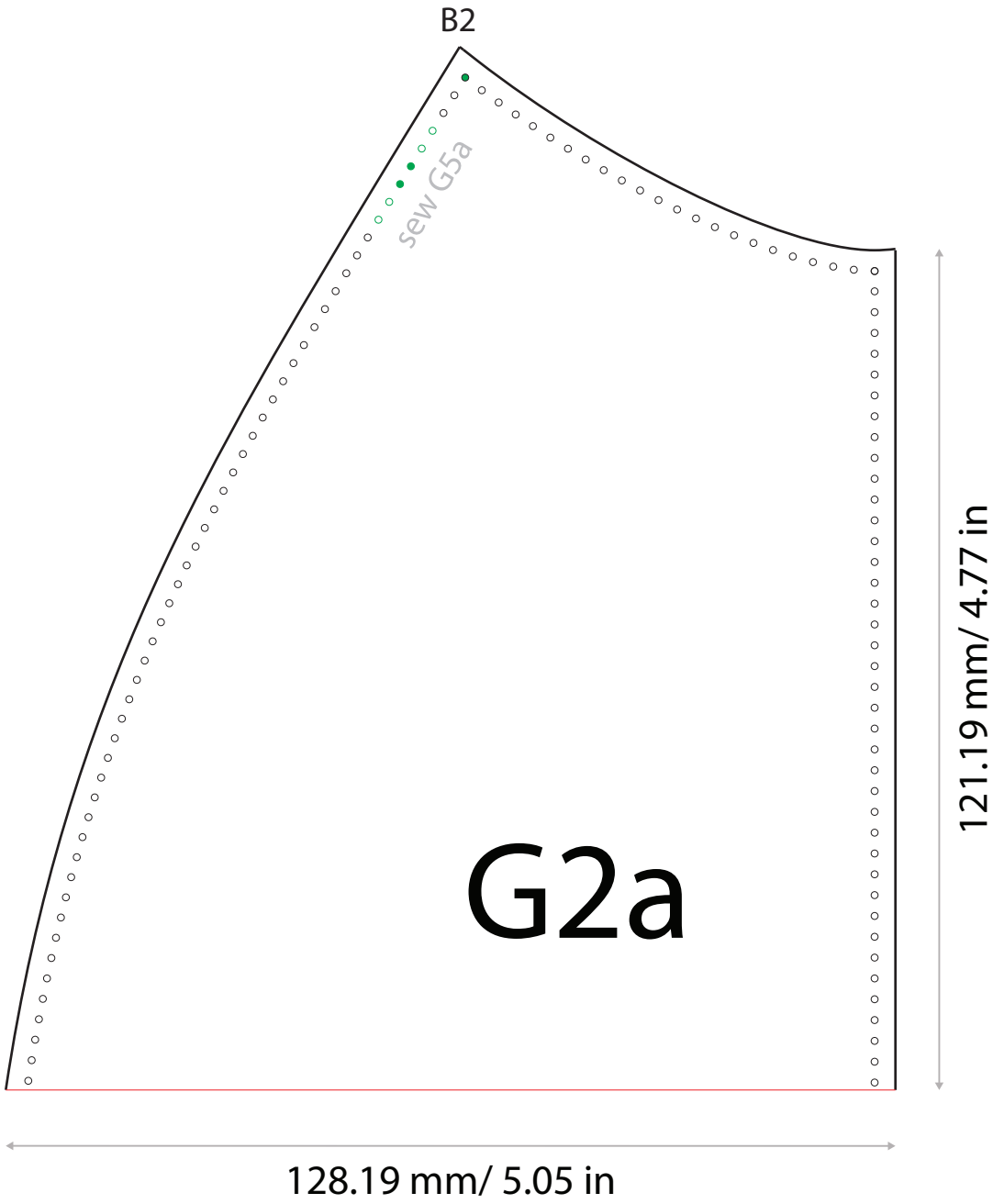

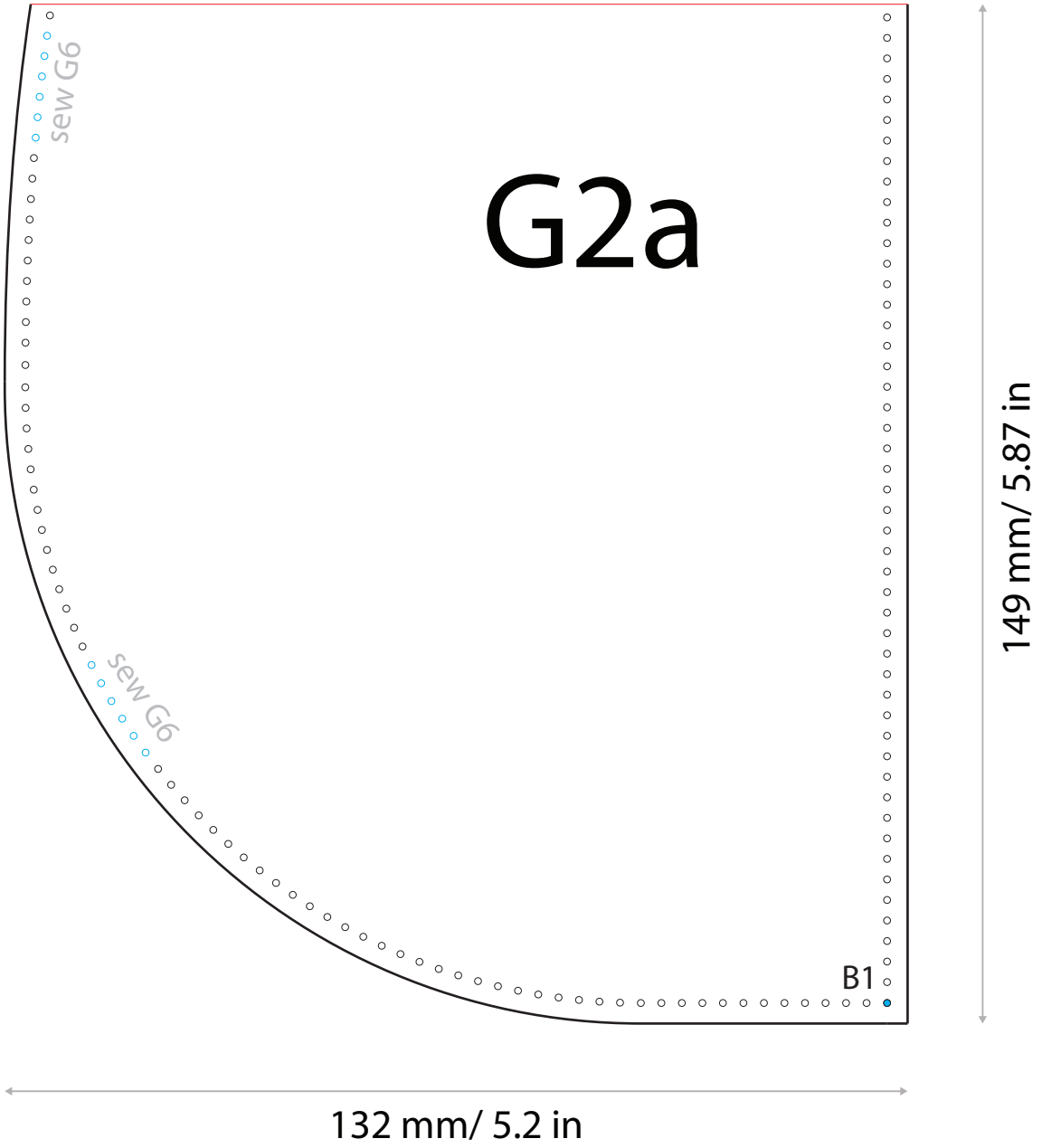

20mm

1 inch

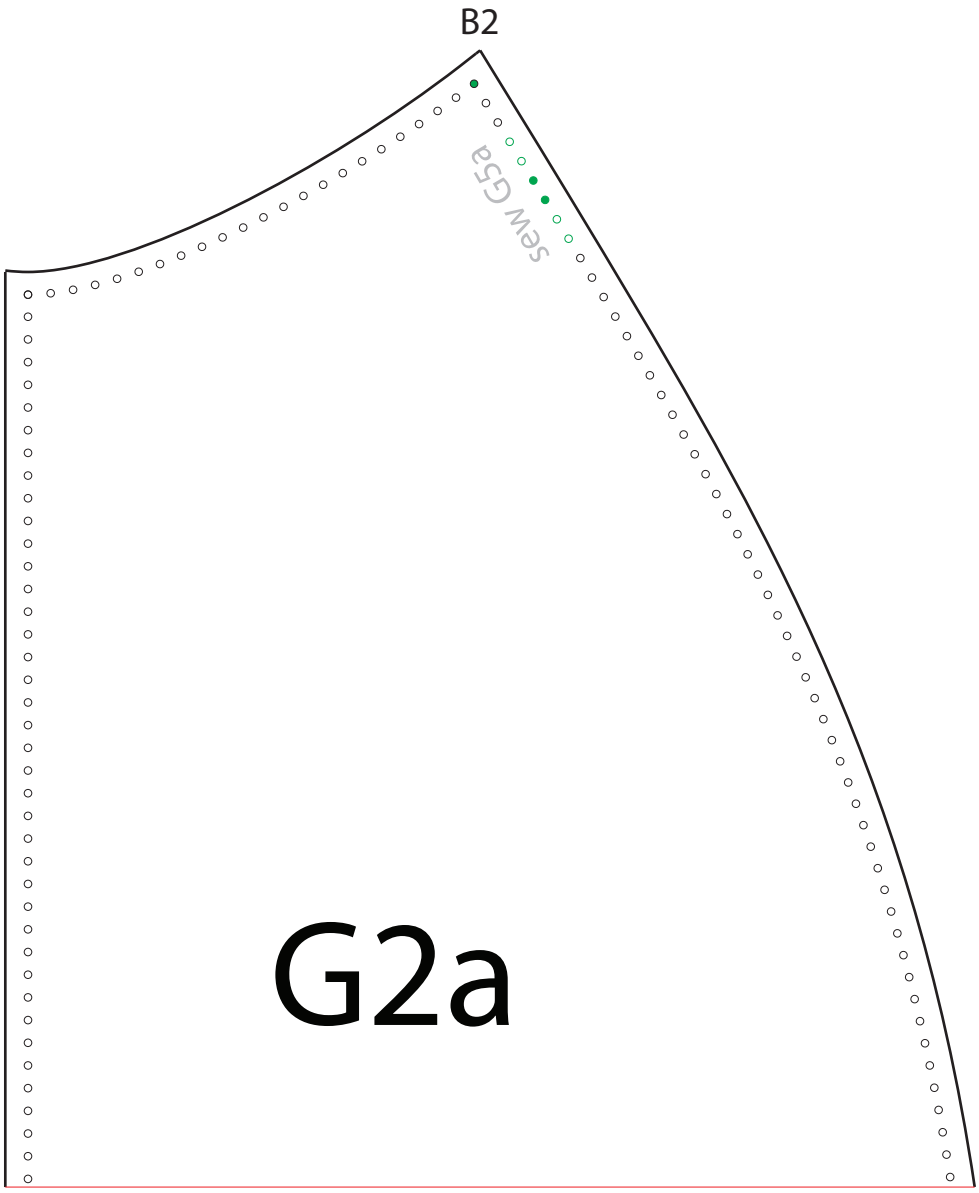

20mm

1 inch



20mm

1 inch

20mm

1 inch

G3a

30 x 24 mm
1.18 x 0.94 in

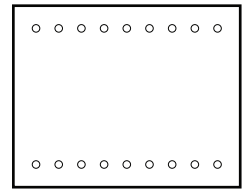

G3

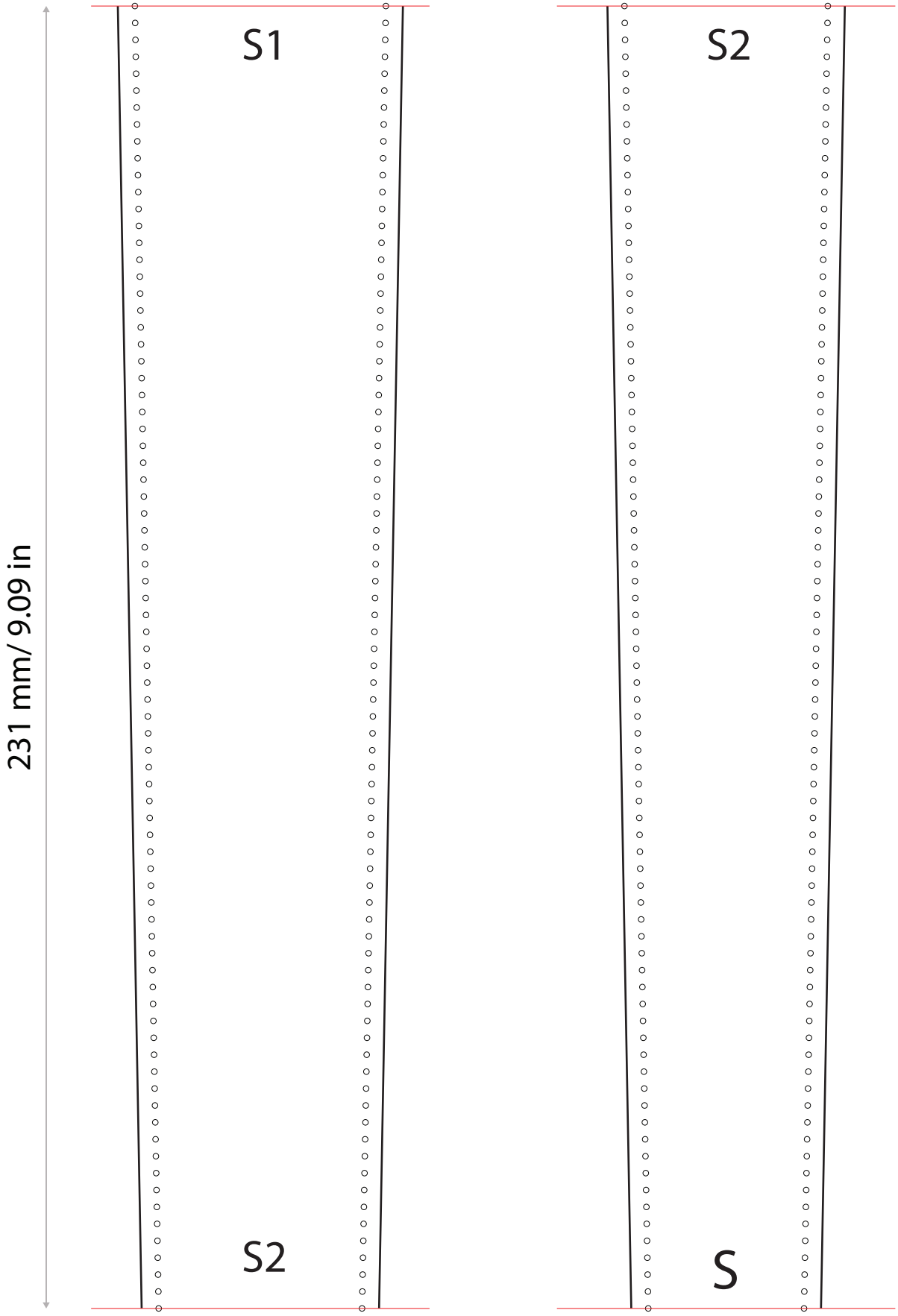
S1
S2
S2
S
231 mm/ 9.09 in
20mm
1 inch

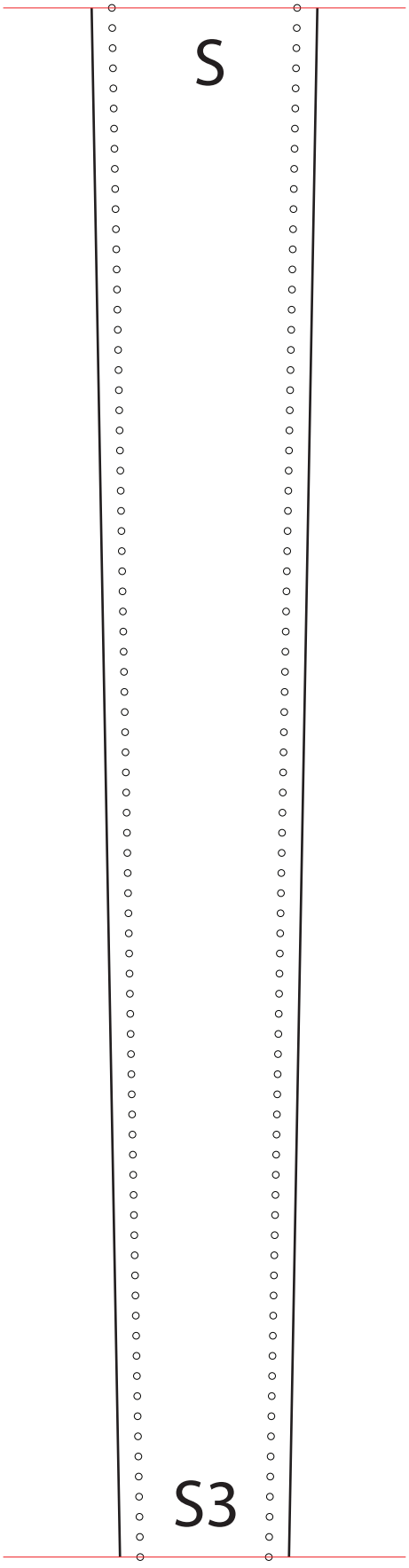

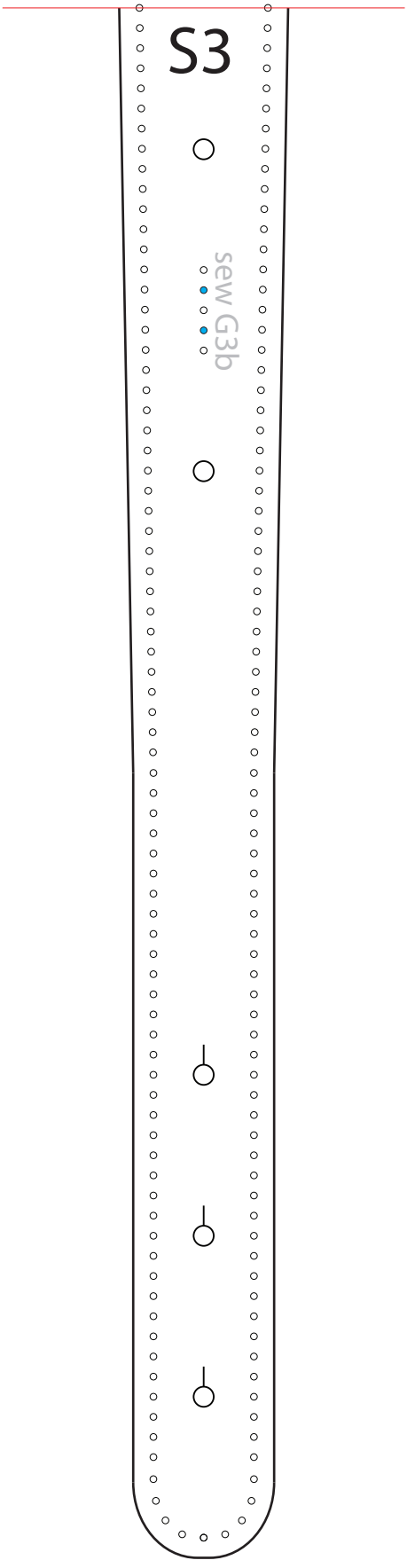

21 mm/ 0.83 in

20mm

1 inch