PATTERNS BY mood DESIGNER FABRICS

MDF458

#MoodNobHillPattern

"The Nob Hill Draped Midi Dress"



STOP!

Print only this page first to check accuracy. The Mood square above should measure 2 inches. Print "actual size" in "portrait" mode (not auto center). Formatted for both US Letter & A4 paper sizes.

Formatted for both US Letter & A4 Paper

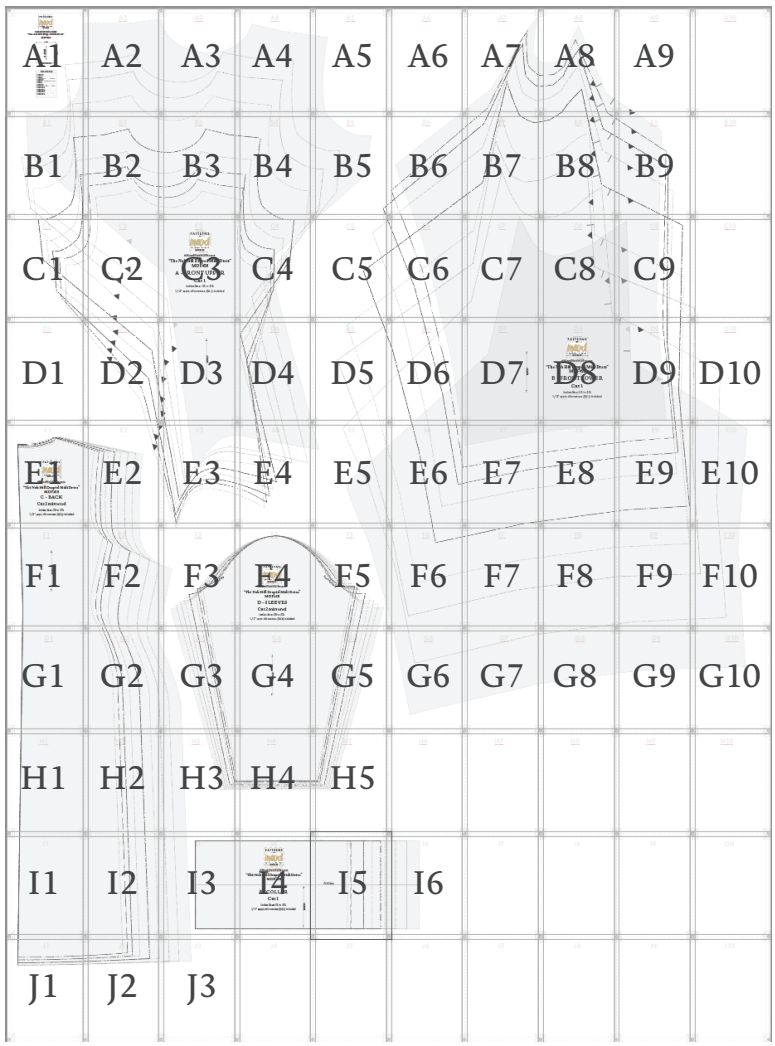

Trimless Option:
This is the fastest! No trimming needed! Place left-side margins over right-side margins, overlapping dashed lines and dots. In the same fashion, top margins will overlap bottom margins. Slight unprinted gaps are normal for this method.

Trimmed Option:
This removes any unprinted gaps. Trim along the top and right margins at the dashed lines. Overlap the trimmed margins to the untrimmed margins, matching dashed lines and dots.

Tip! Build rows first, then join the rows together as you go.

©2025 MoodFabrics.com / MoodSewciety.com
Mass production, resale, or distribution of this pattern in any form is strictly prohibited.

mood SEWCIETY

#MoodNobHillPattern

PATTERNS BY mood DESIGNER FABRICS MDF458

MDF458 - "The Nob Hill Draped Midi Dress"

Ladies Sizes XS to 5XL

BODY MEASUREMENTS - IN INCHES (Chart 1)

SIZE	XS	S	M	L	XL	2XL	3XL	4XL	5XL
BUST	31- 32	33 - 34	25 - 36	37 - 39	40 - 43	44 - 47	48 - 51	52 - 55	56 - 60
WAIST	23 - 24	25 - 26	27 - 28	29 - 31	32 - 35	36 - 39	40 - 43	44 - 47	48 - 52
HIPS	34 - 35	36 - 37	38 - 39	40 - 42	43 - 46	47 - 50	51 - 54	55 - 58	60 - 63

APPROXIMATE FINISHED GARMENT MEASUREMENTS - IN INCHES (Chart 2)

SIZE	XS	S	M	L	XL	2XL	3XL	4XL	5XL
BUST	34	36	38	41	45	49	53	57	62
WAIST	25	27	29	32	36	40	44	48	53
HIPS	43	45	47	50	54	58	62	66	71

*Designed for four-way stretch fabrics (with at least 25% stretch both ways). Size guide is based on the suggested design and wearing ease for this style. You can also choose the size according to your desired finished garment measurements, blending between sizes as needed. For best results, sew a test garment in a similar fabric to adjust your pattern.

Recommended Fabric: Stretch Polyester Crepe, Cotton jersey, Stretch Velvet.

We love creating these free patterns for the community and we want to keep them free! In return, we hope you check out MoodFabrics.com for your next project!

Want to use one of our patterns to make a garment to sell? Our patterns are royalty-free! We just ask that you credit us with:
MoodSewciety.com
or
MoodFabrics.com
in your product description.

FOR SEWING INSTRUCTIONS AND MORE INFORMATION:
Scan the QR code or visit MoodSewciety.com and search "MDF458"

1/2" seam allowances (SA's) included unless stated otherwise.

REMEMBER TO SHARE YOUR MADE WITH MOOD LOOK!

Tag us and use:
#MoodNobHillPattern
for a shot at being featured on our social media

@mood.fabrics
@moodfabrics
@Mood_Fabrics
@moodfabrics
@moodfabrics

©2025 MoodFabrics.com / MoodSewciety.com
Mass production, resale, or distribution of this pattern in any form is strictly prohibited.

mood SEWCIETY

♥ The Mood Sewciety Team

PATTERNS BY mood DESIGNER FABRICS MDF458

"The Nob Hill Draped Midi Dress"

PATTERN PIECES

A	**FRONT UPPER** FABRIC - CUT 1
B	**FRONT LOWER** FABRIC - CUT 1
C	**BACK** FABRIC - CUT 2 MIRRORED
D	**SLEEVES** FABRIC - CUT 2 MIRRORED
E	**COLLAR** FABRIC - CUT 1

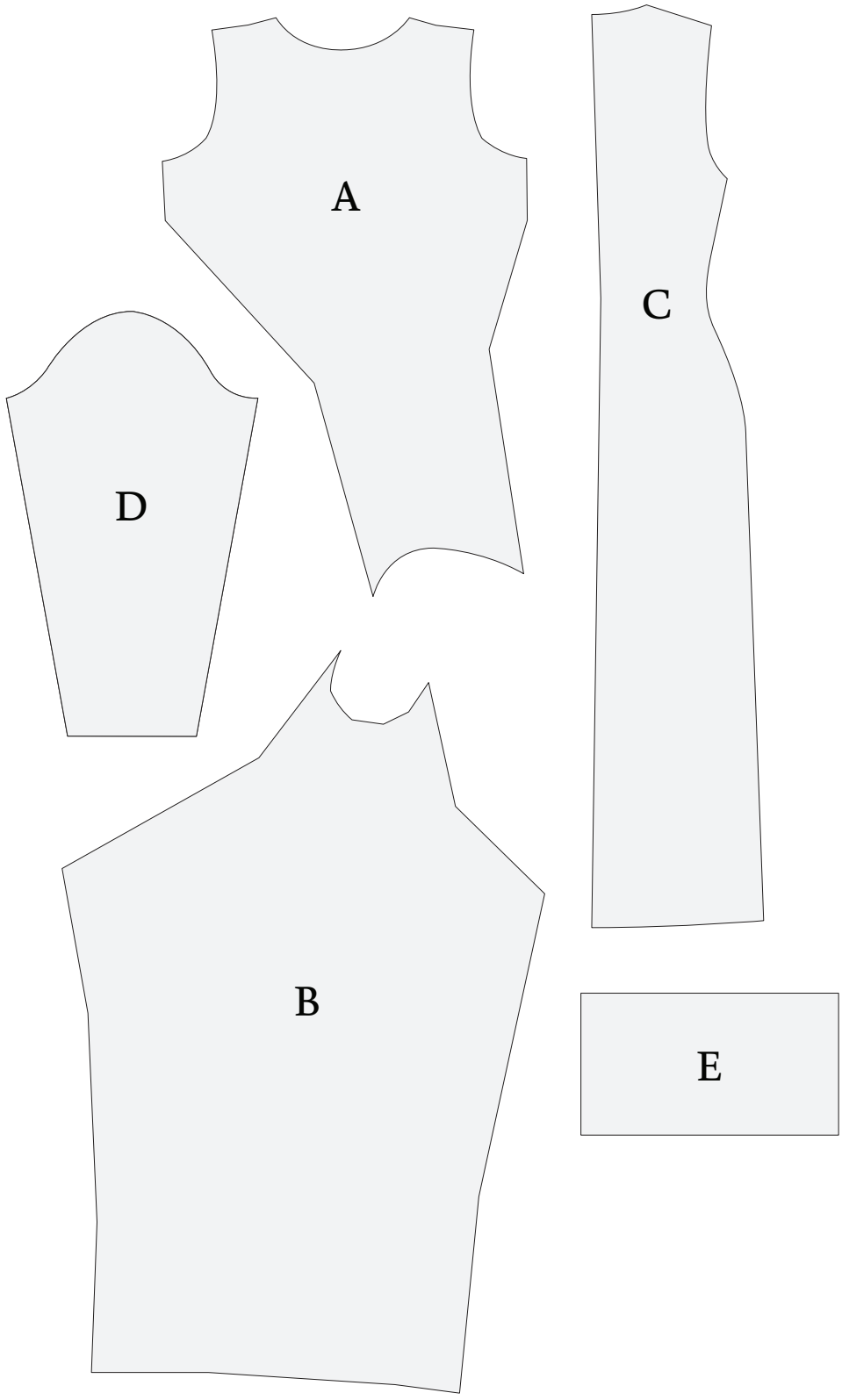

©2025 MoodFabrics.com / MoodSewciety.com
Mass production, resale, or distribution of this pattern in any form is strictly prohibited.
mood SEWCIETY

PATTERNS BY mood DESIGNER FABRICS

MDF458

#MoodNobHillPattern

"The Nob Hill Draped Midi Dress"
MDF458

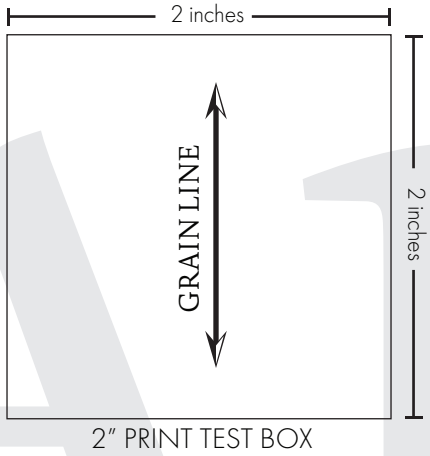

2" PRINT TEST BOX

A1

Size Line Key
SIZE XS
SIZE S
SIZE M
SIZE L
SIZE XL
SIZE 2XL
SIZE 3XL
SIZE 4XL
SIZE 5XL

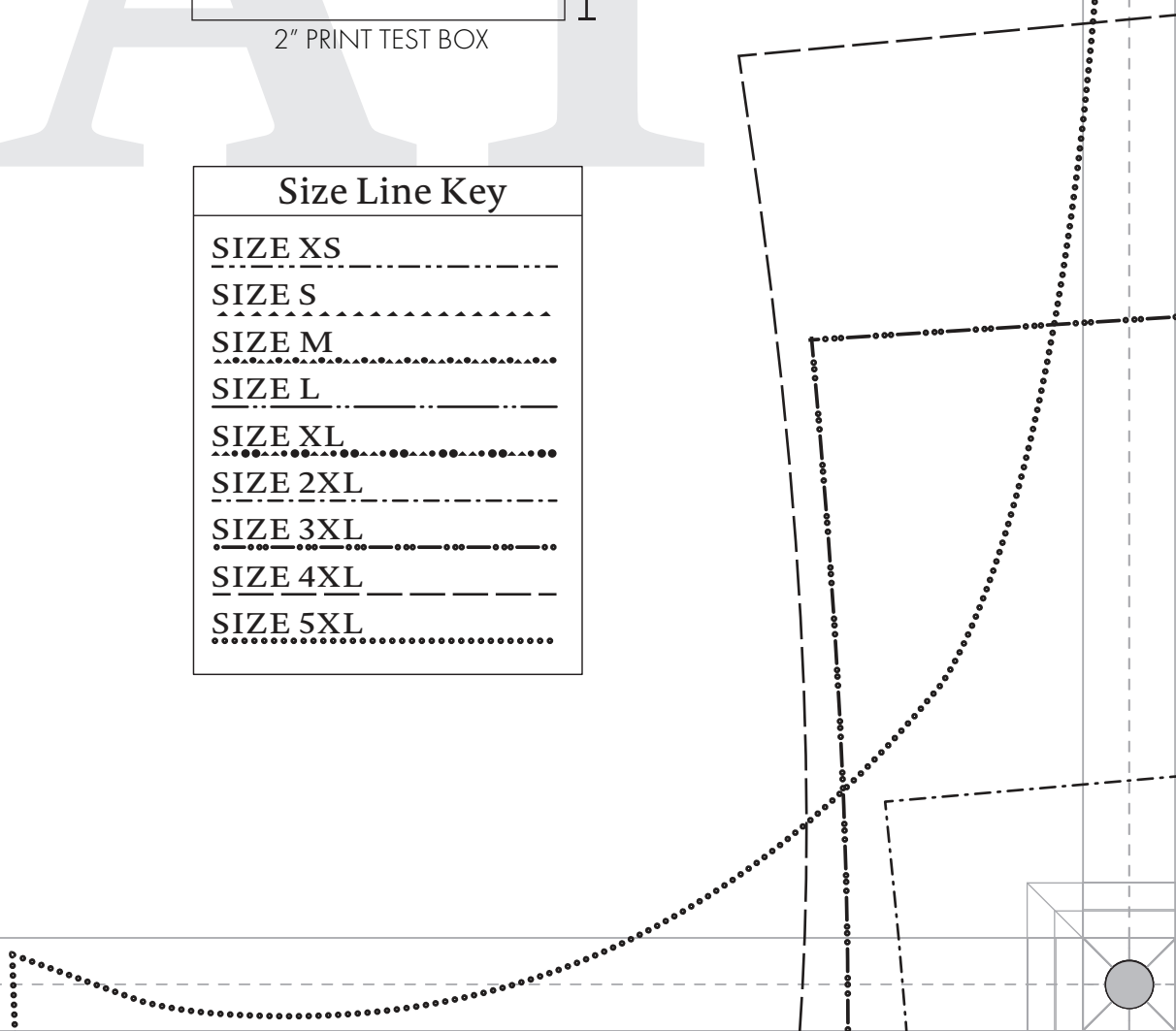

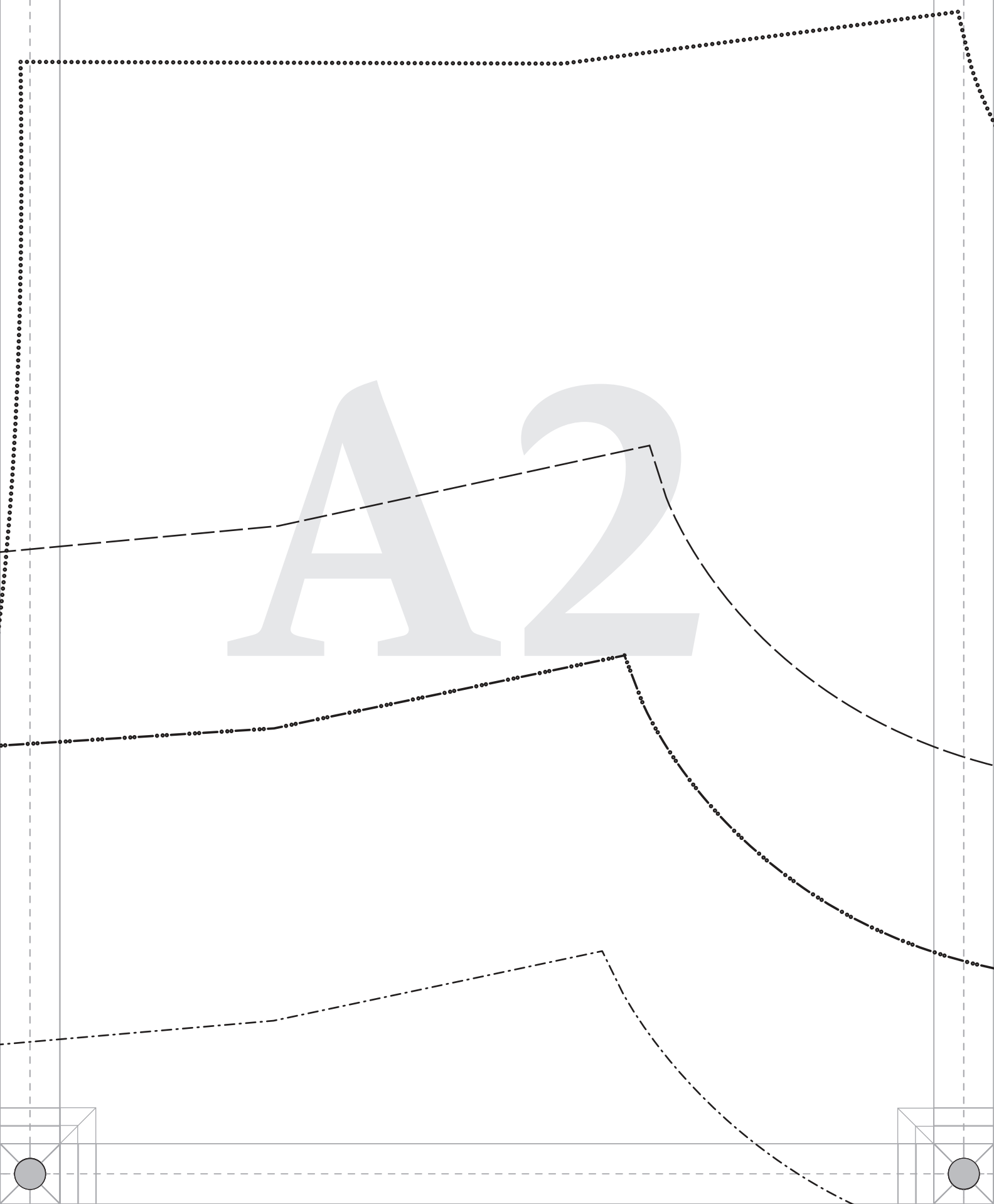
A2

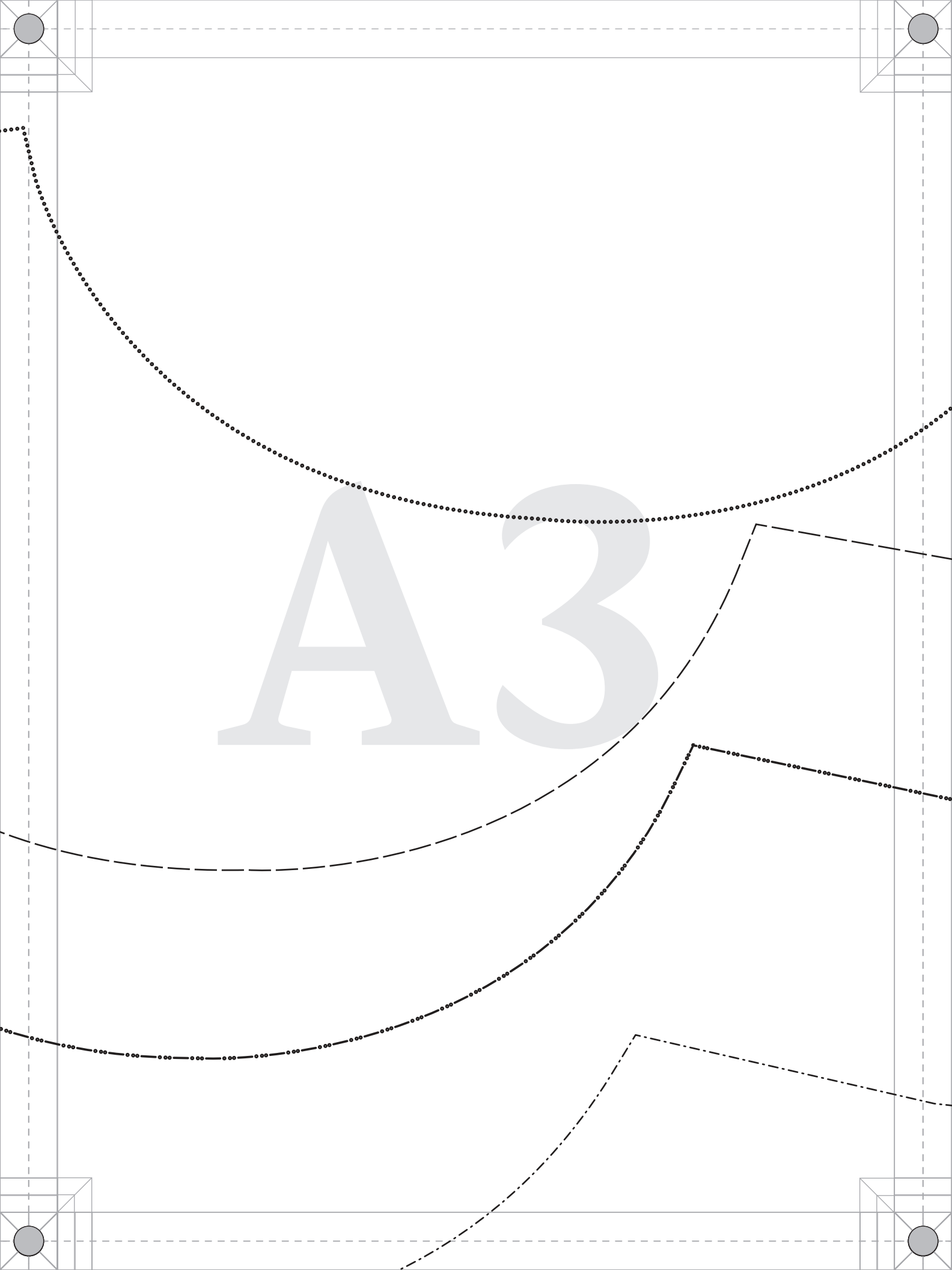
A3

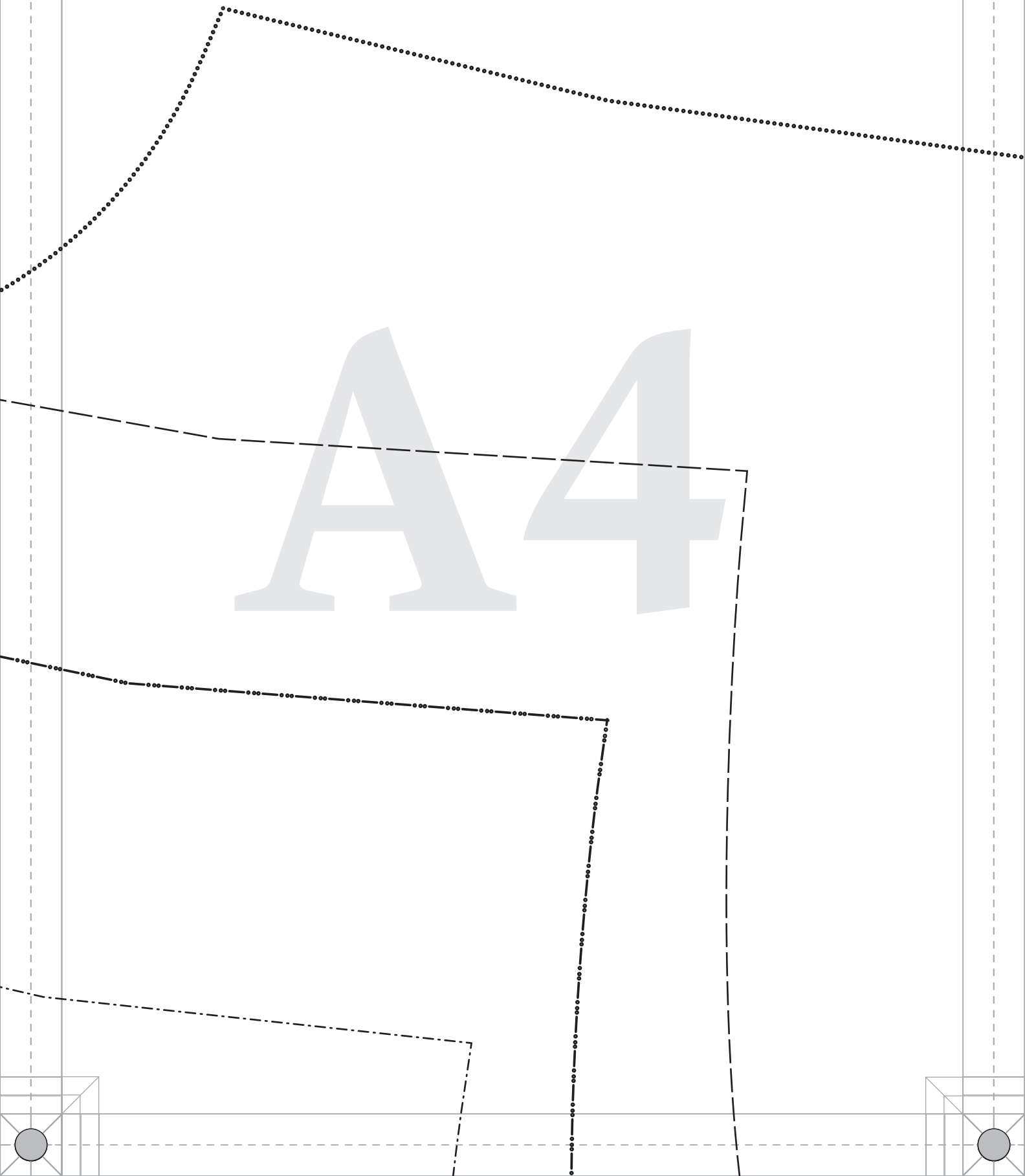
A4

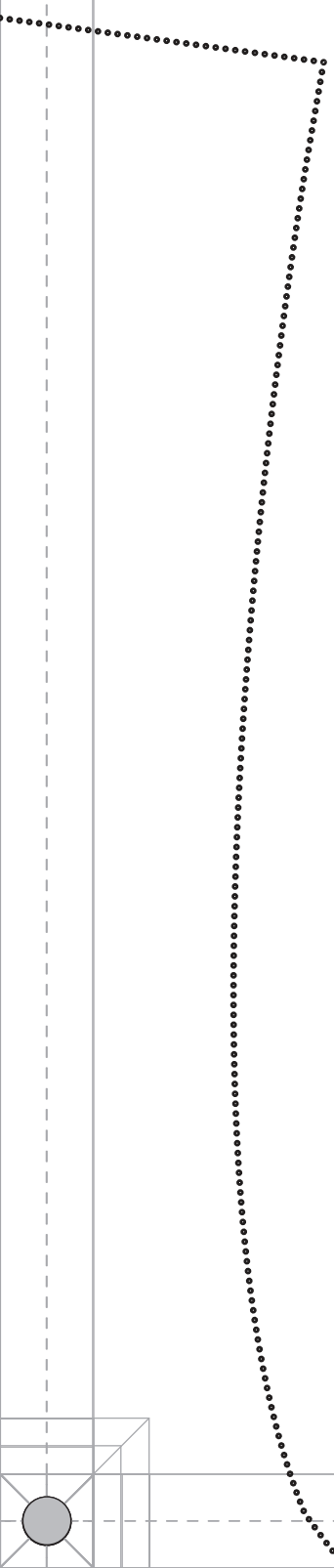
A5

A6

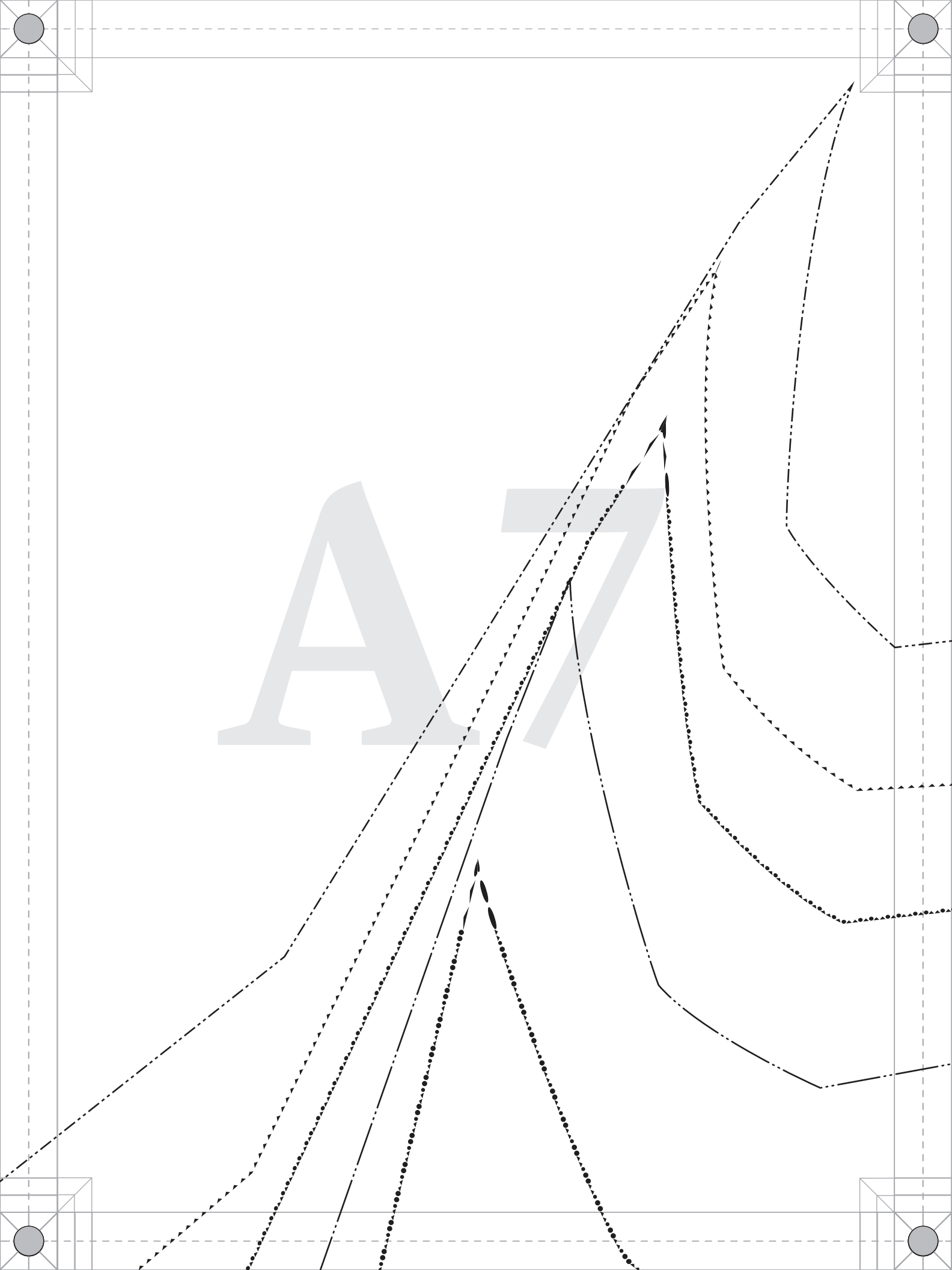

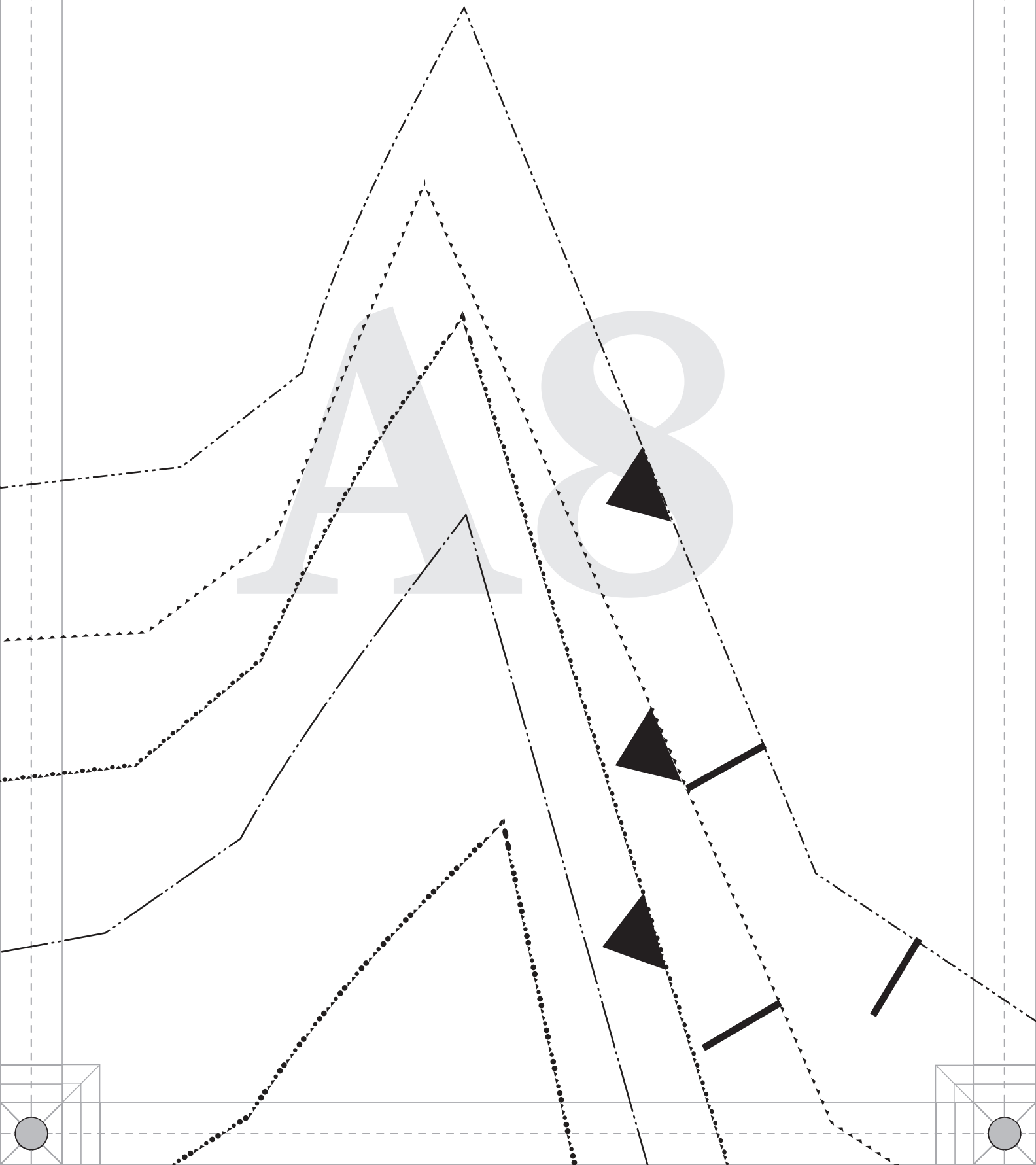
A8

A9

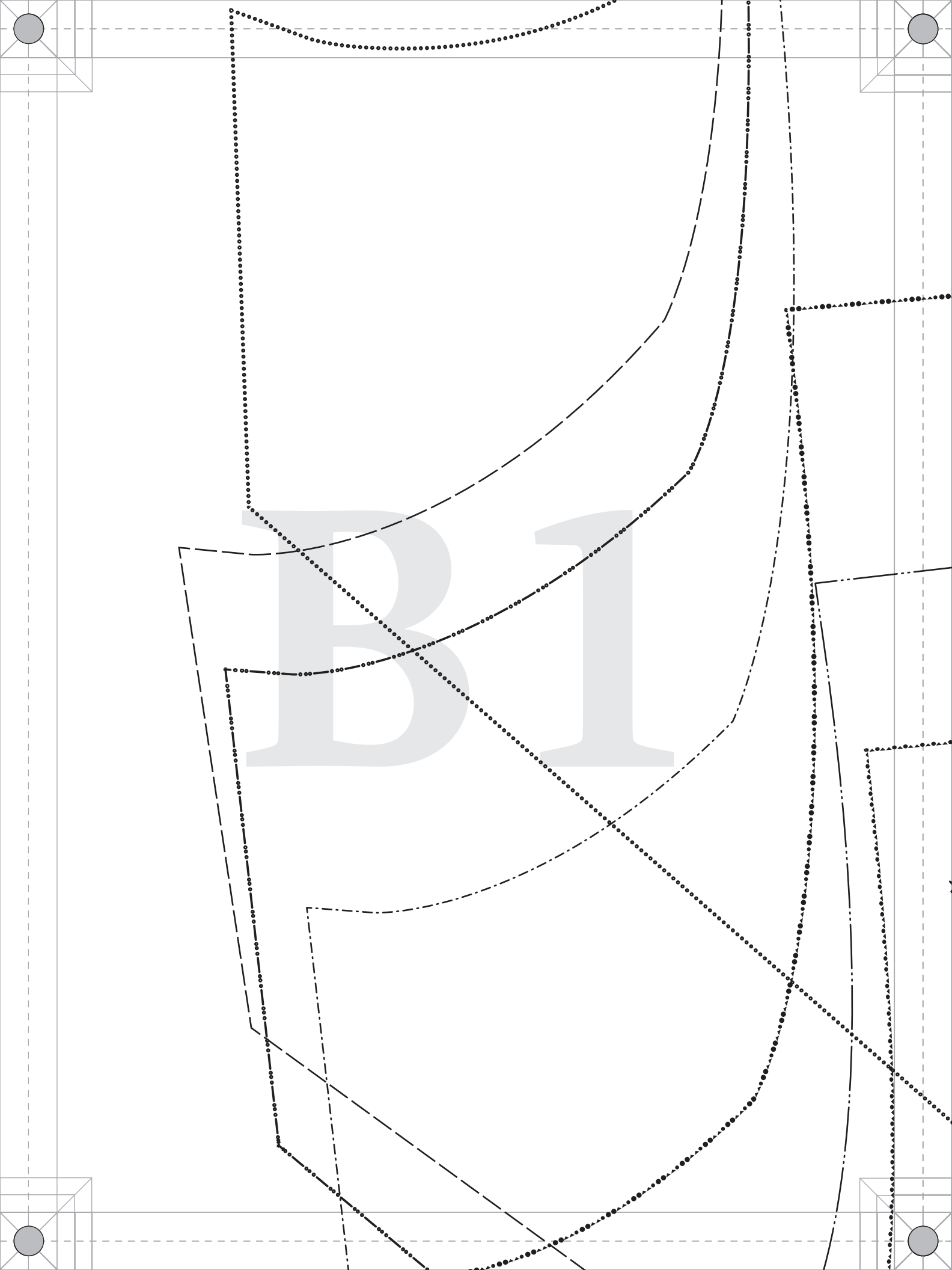
B1

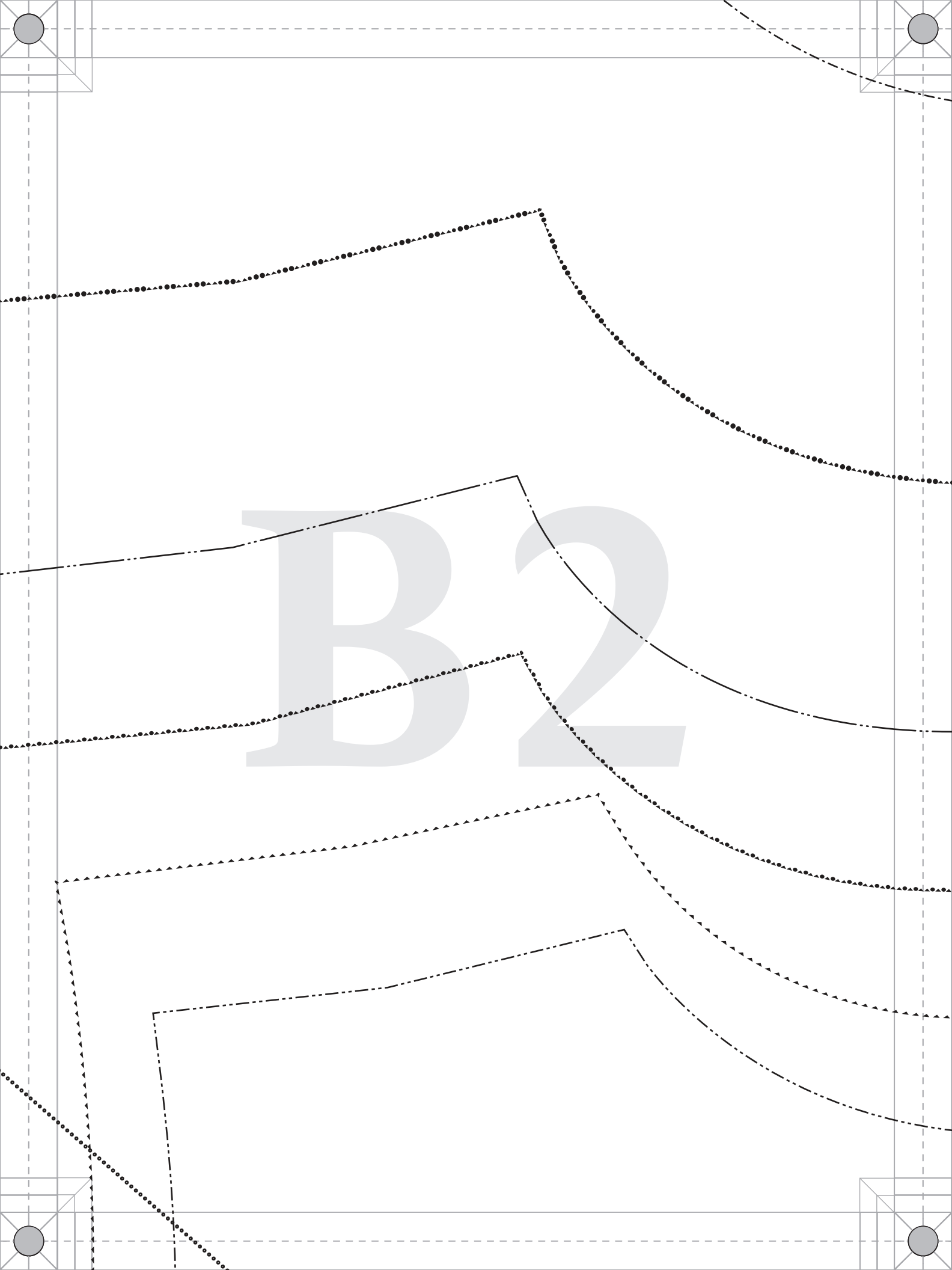
B2

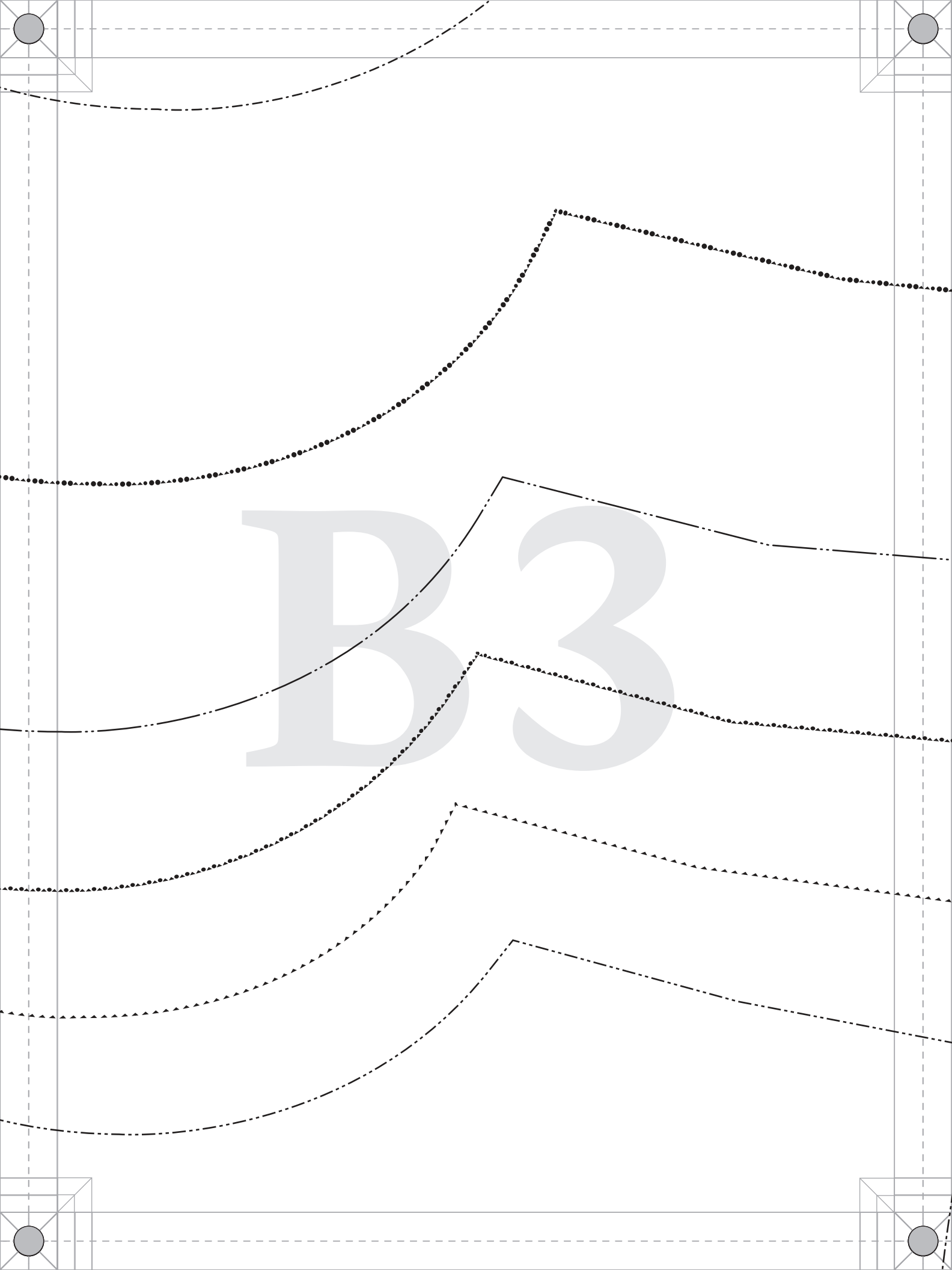
B3

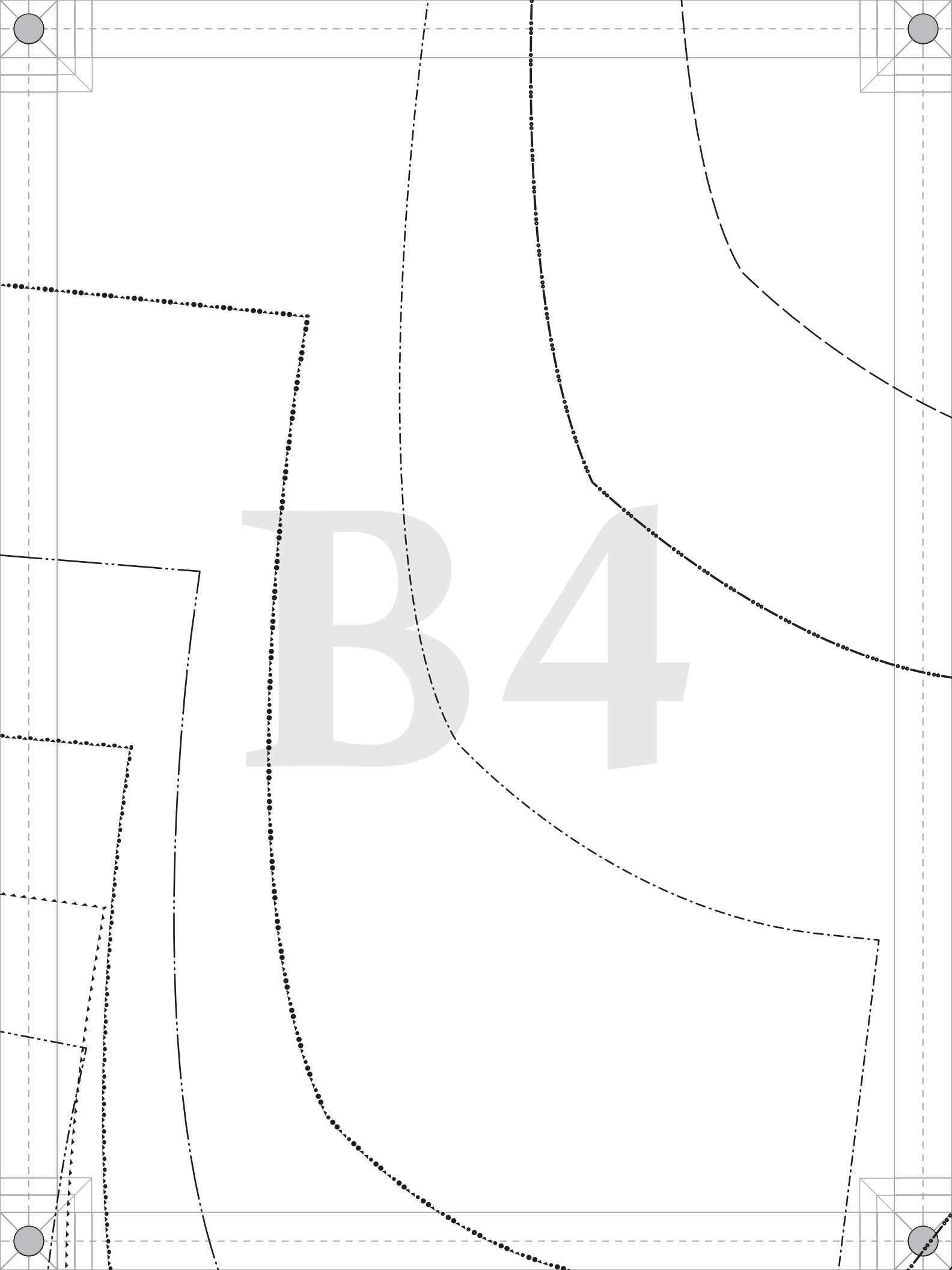
B4

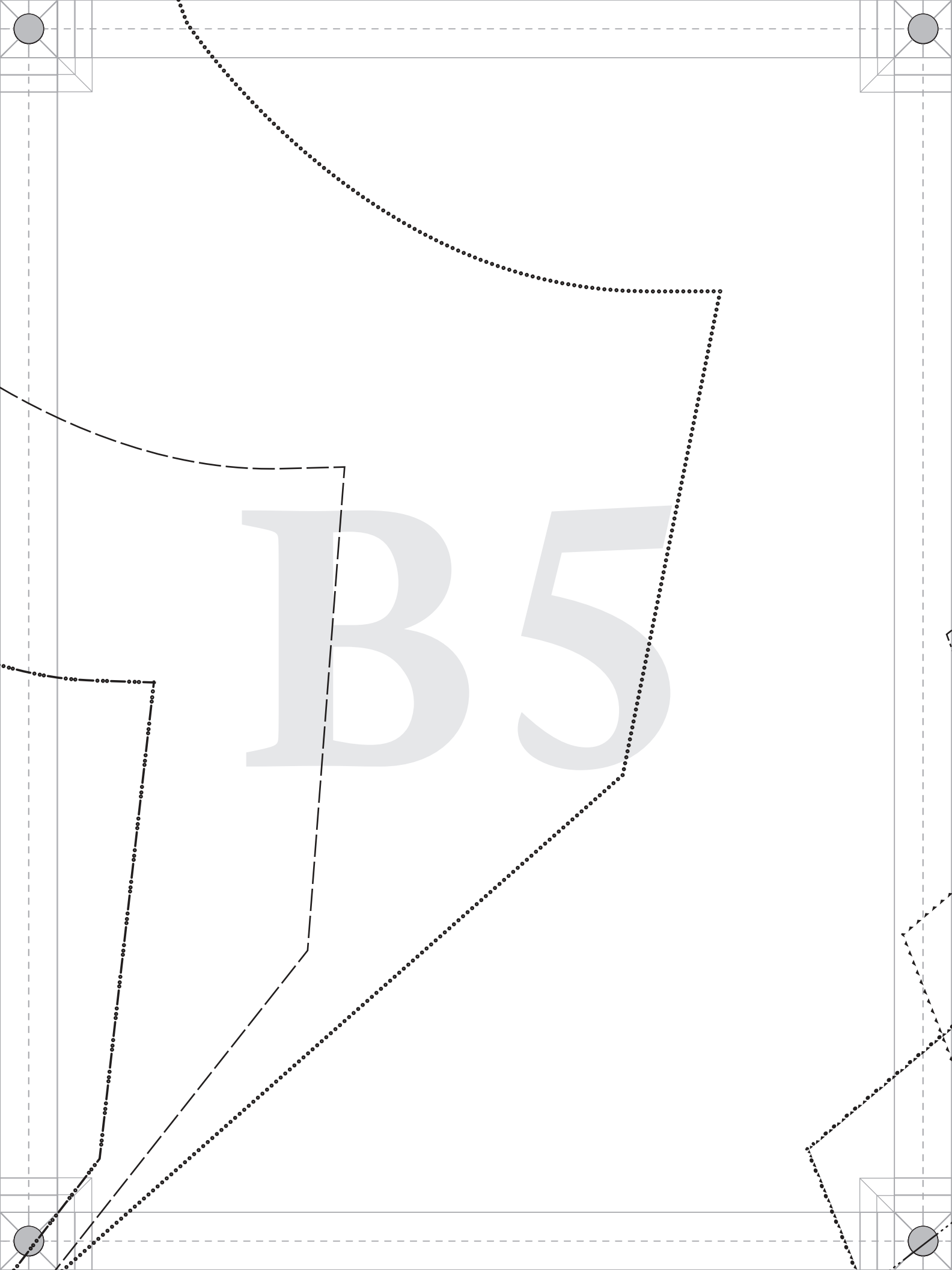
B5

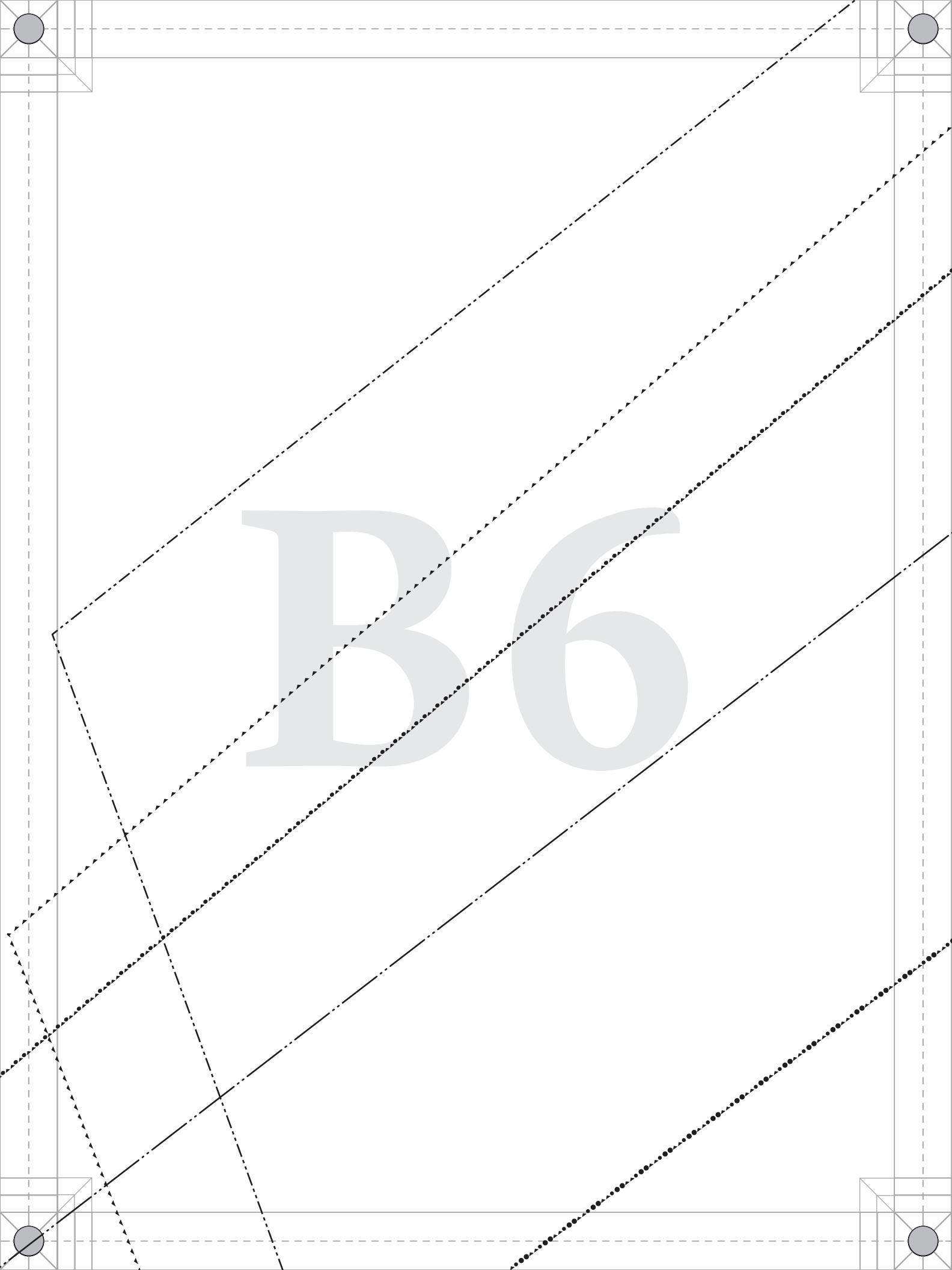
B6

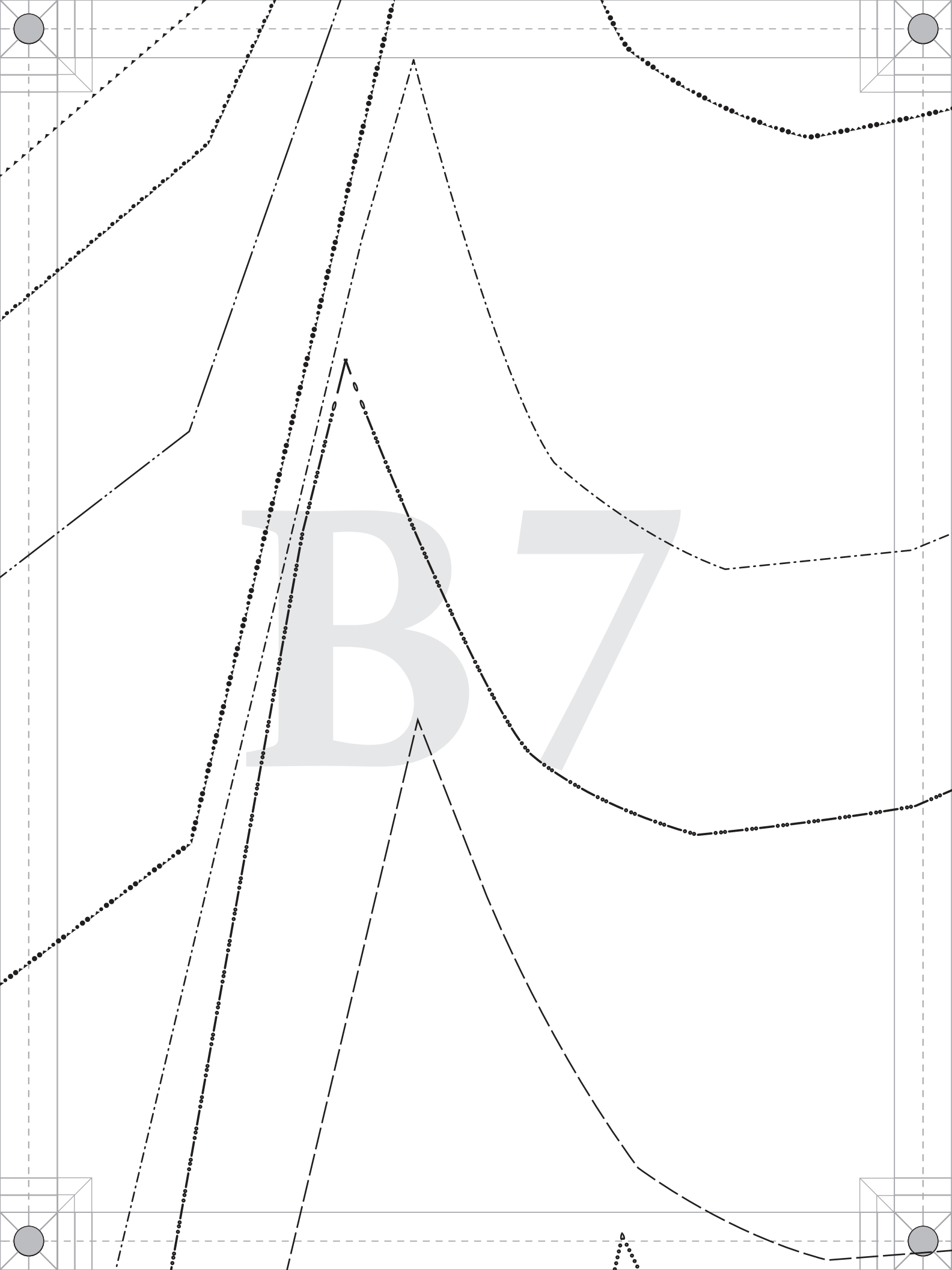
B7

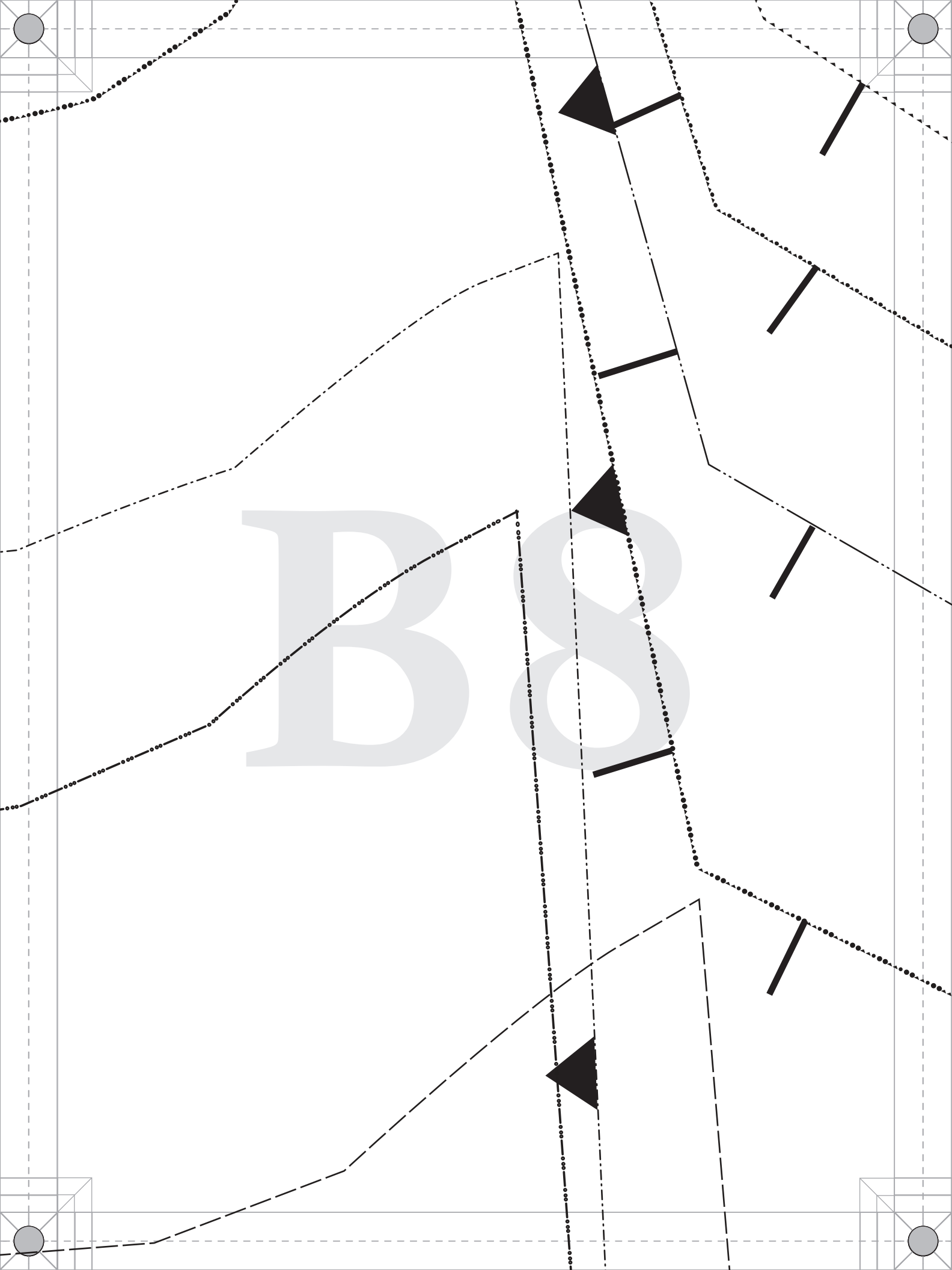

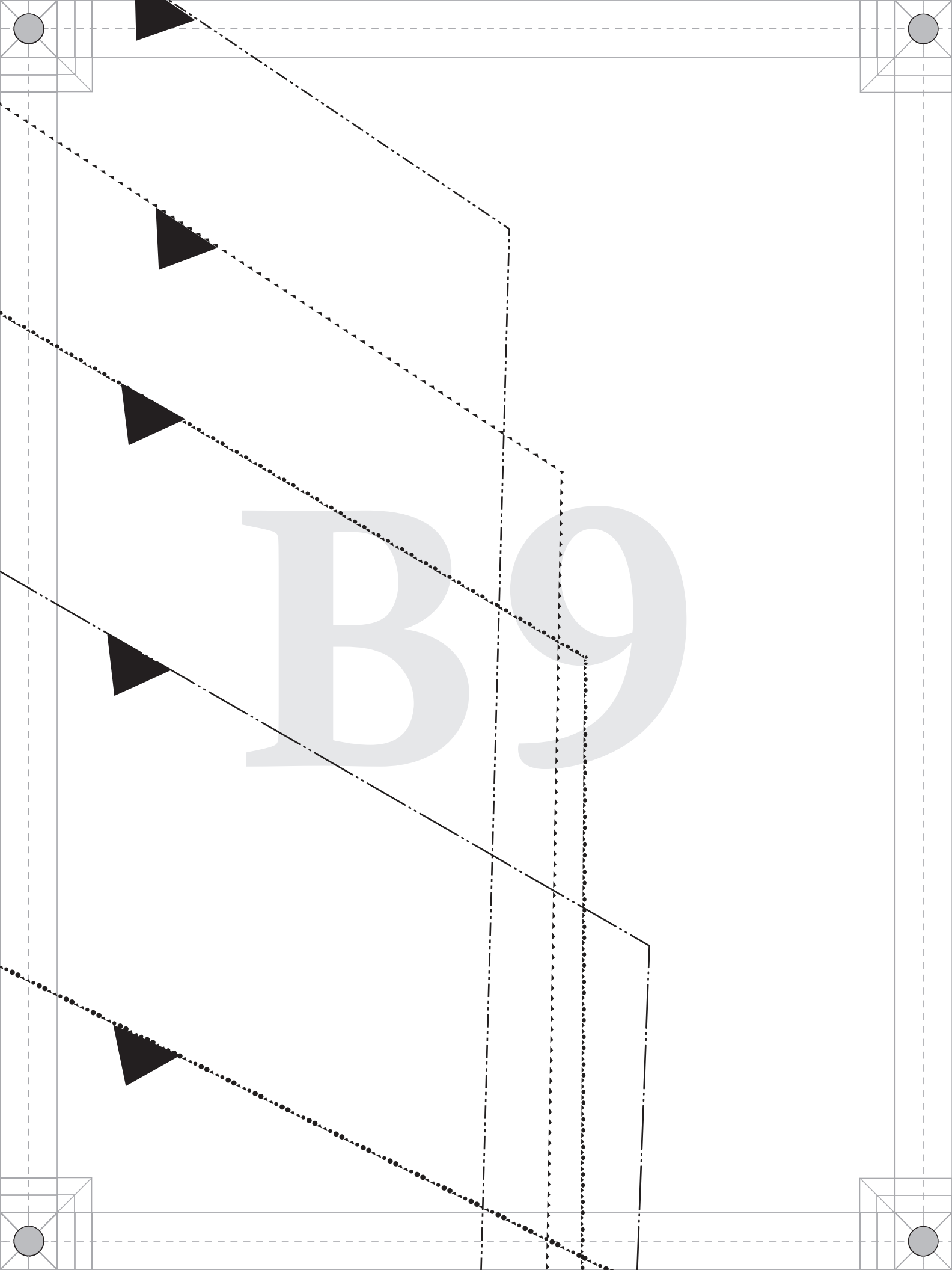
B9

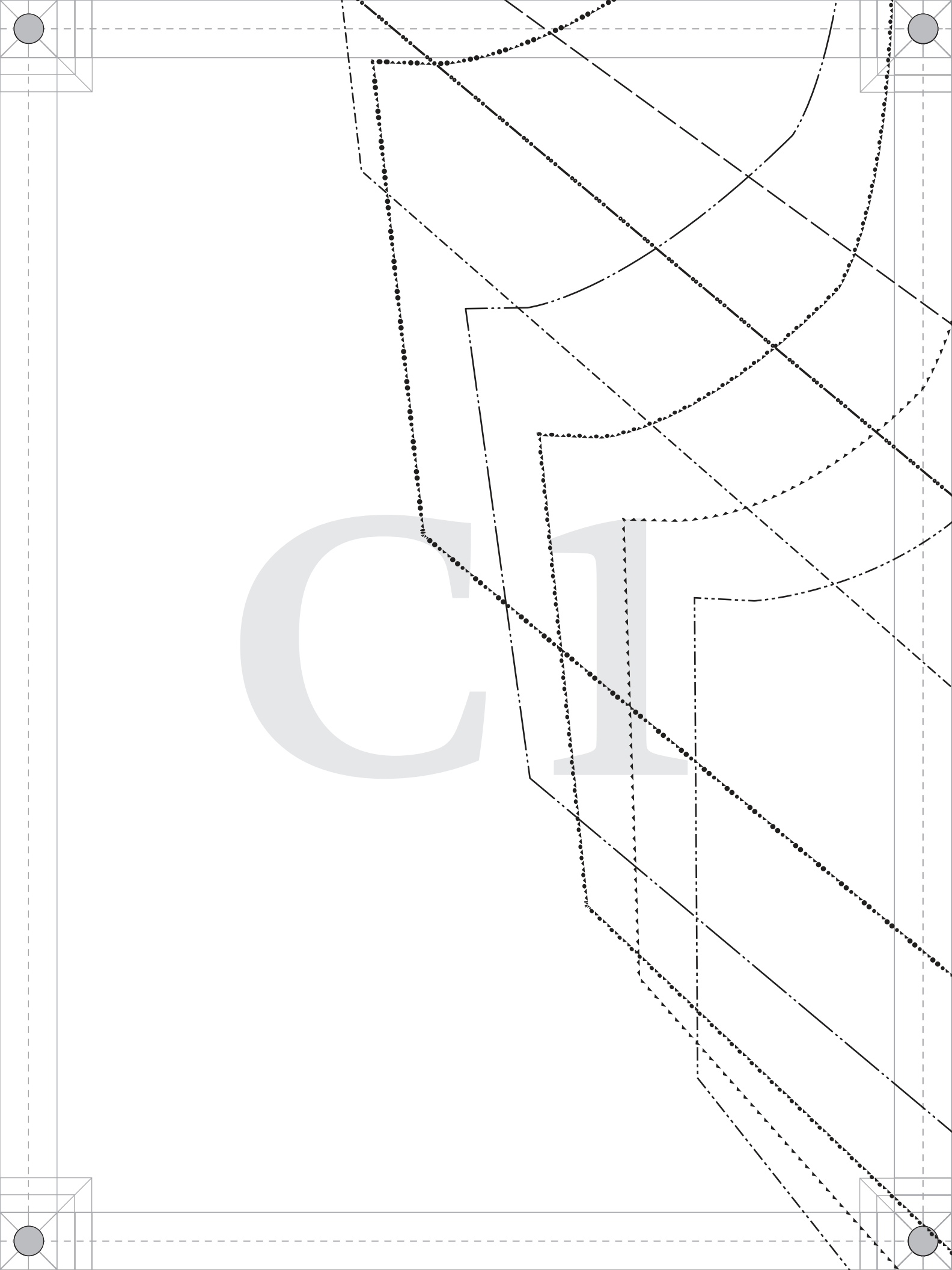

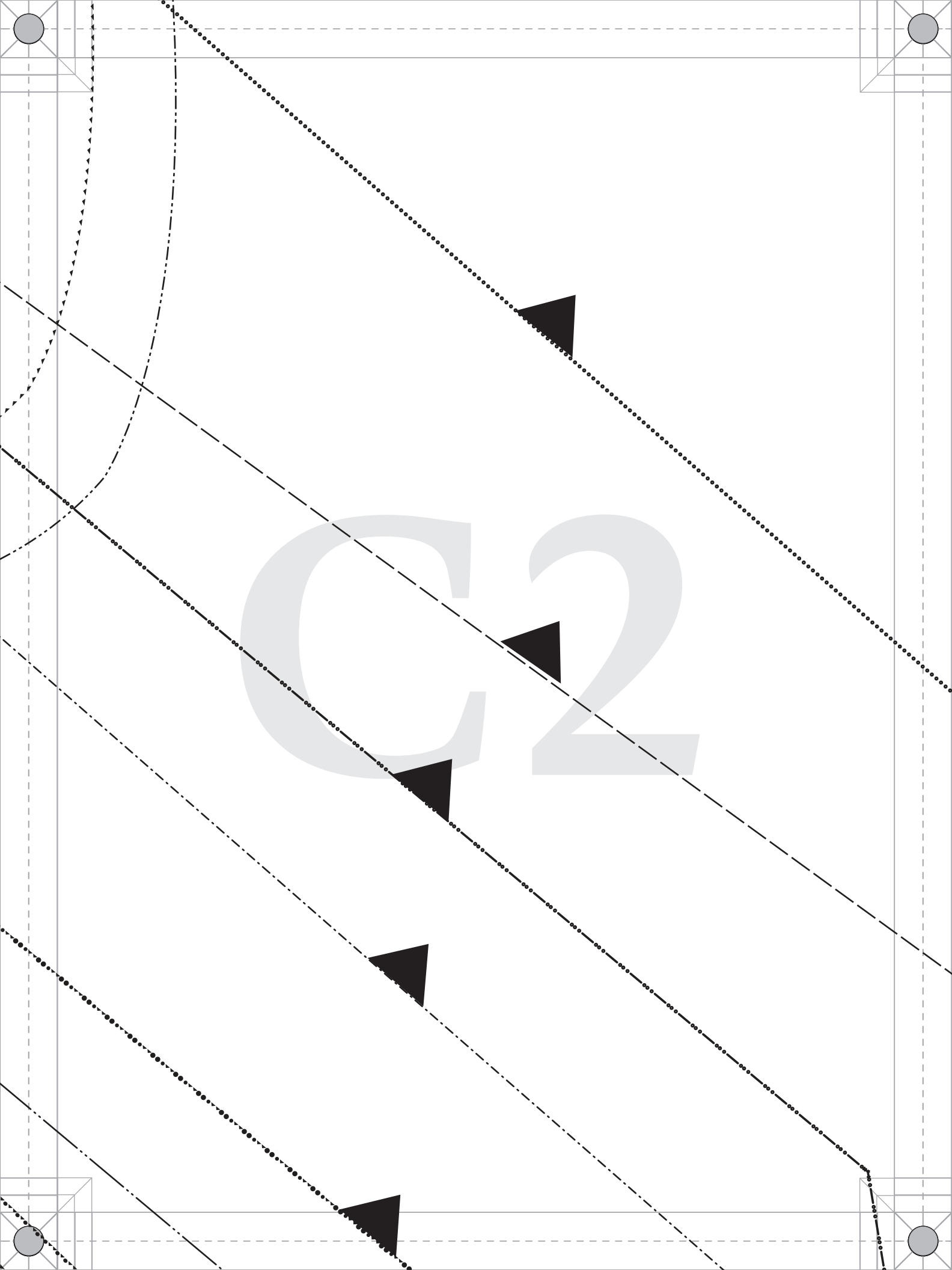
C2

PATTERNS BY mood DESIGNER FABRICS MDF458

#MoodNobHillPattern

"The Nob Hill Draped Midi Dress" MDF458

A - FRONT UPPER

Cut 1

Ladies Sizes XS to 5XL

1/2" seam allowances (SA's) included

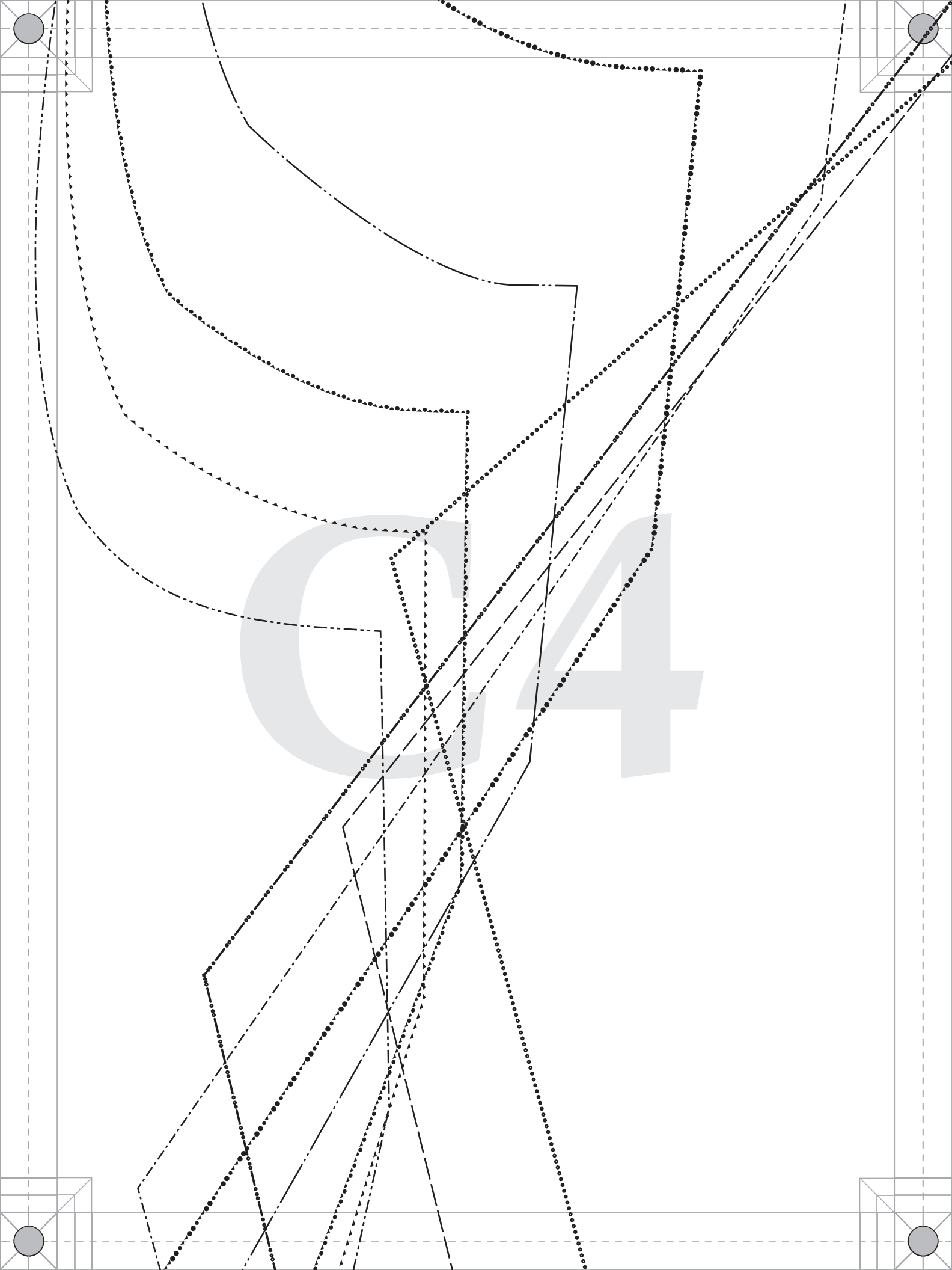
C4

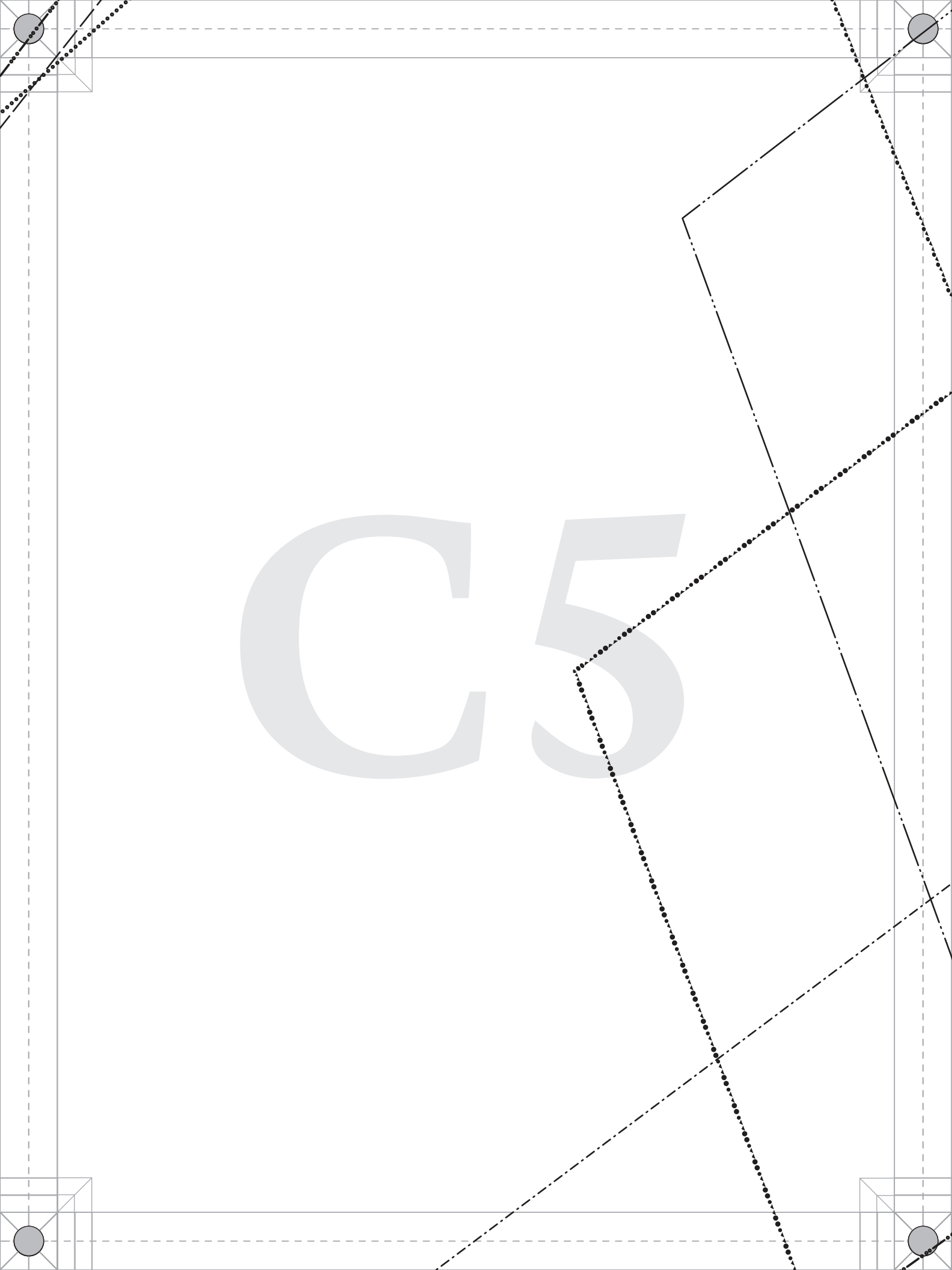
C5

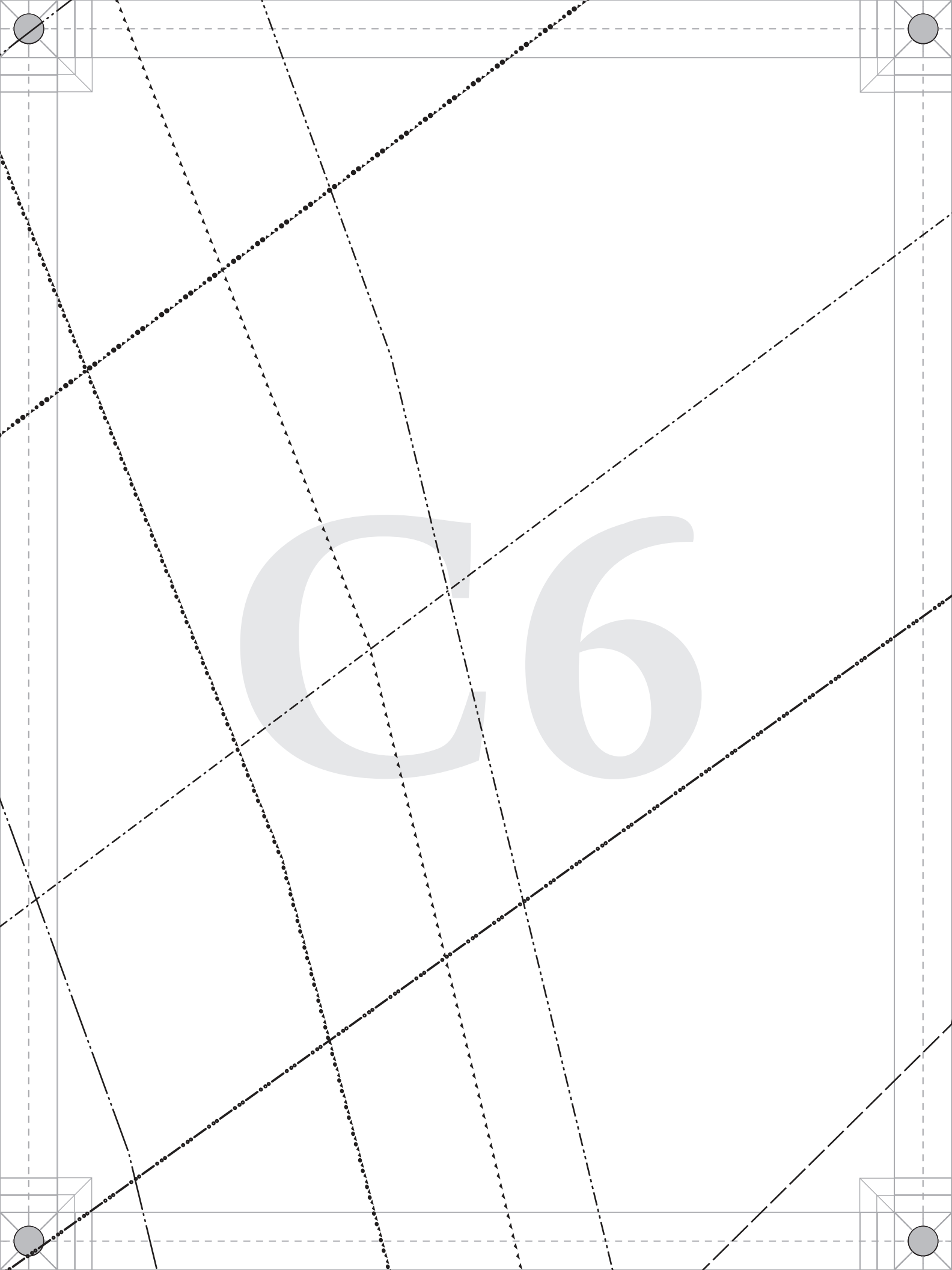
C6

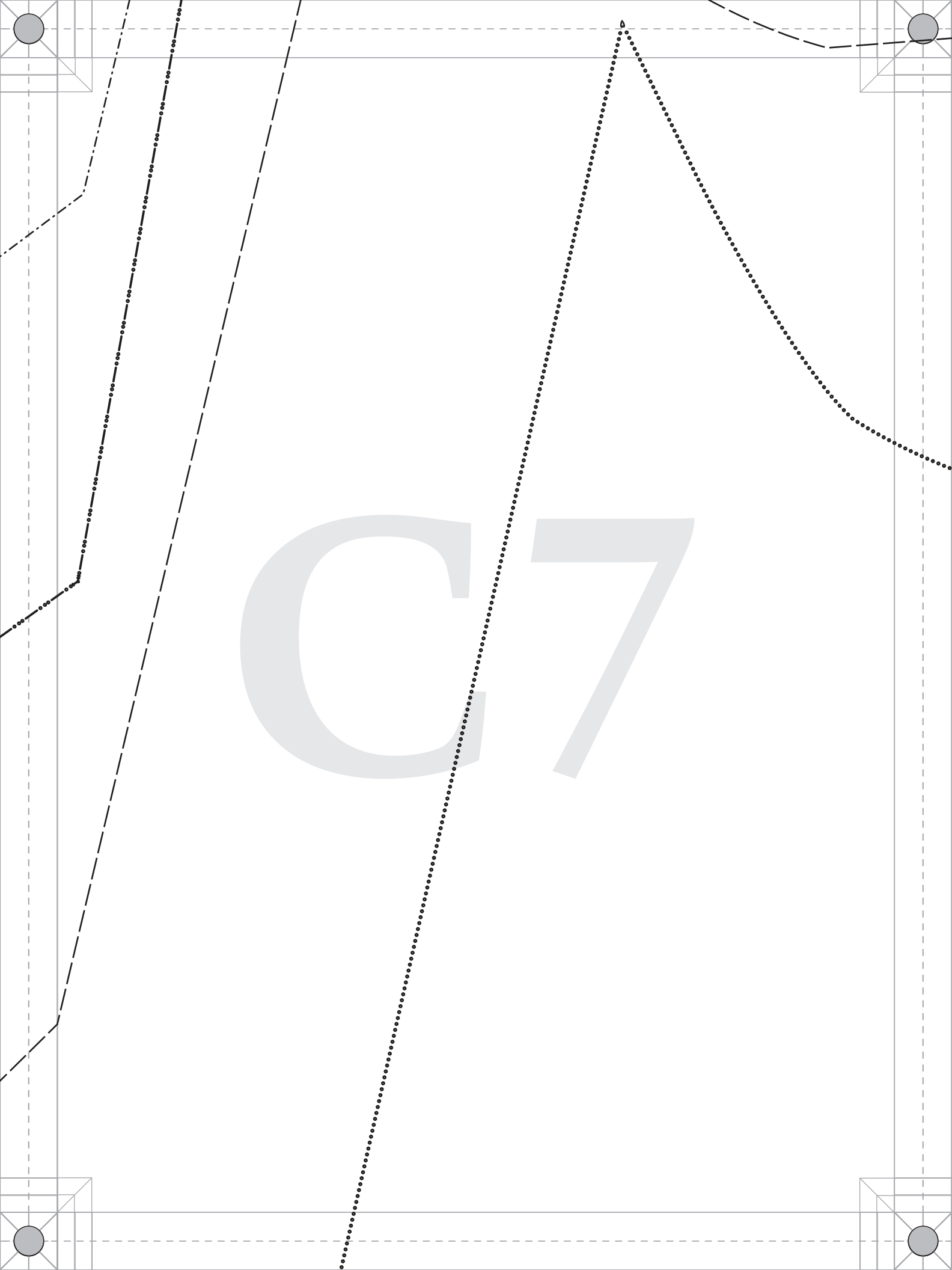
C7

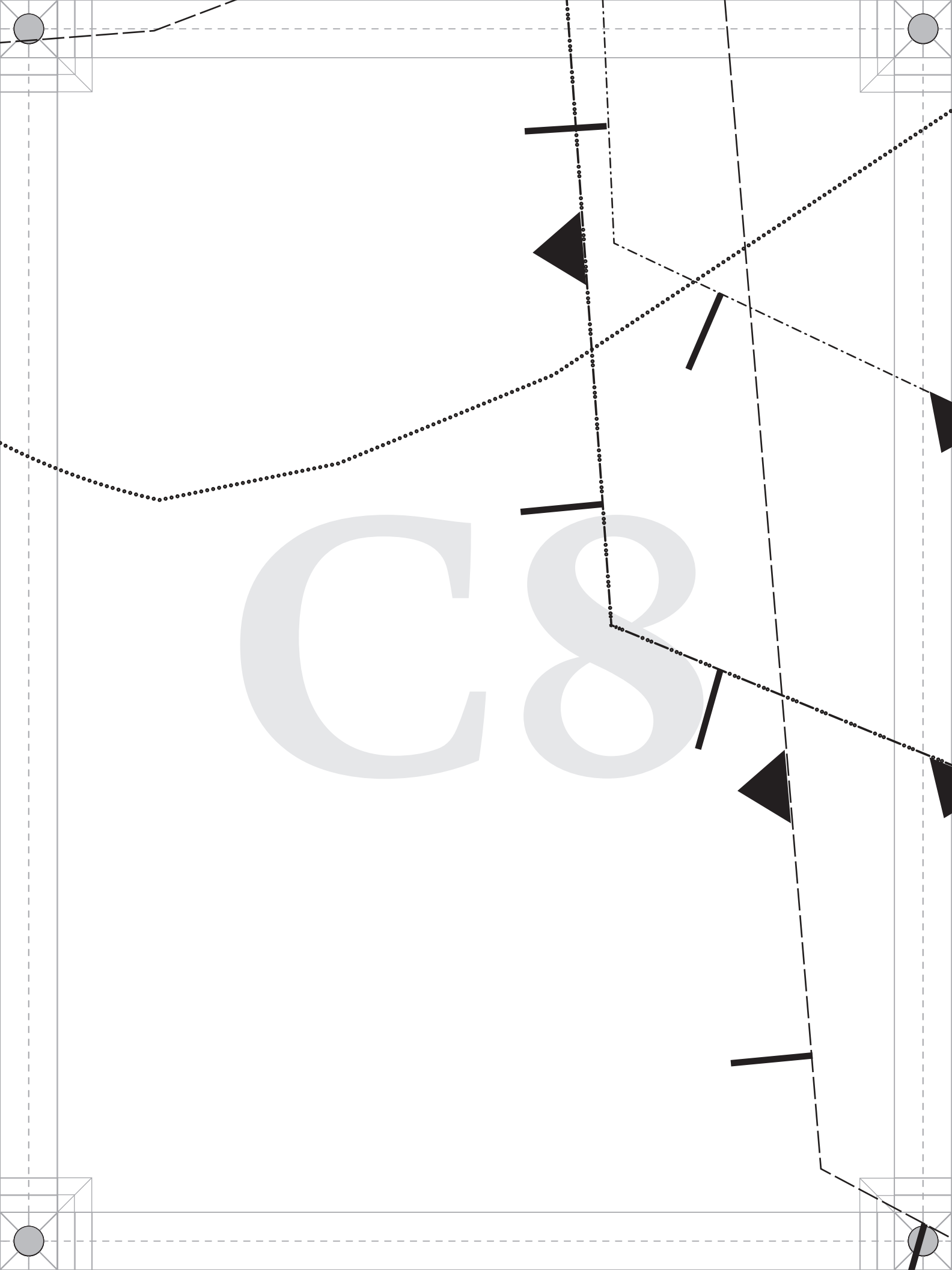
C8

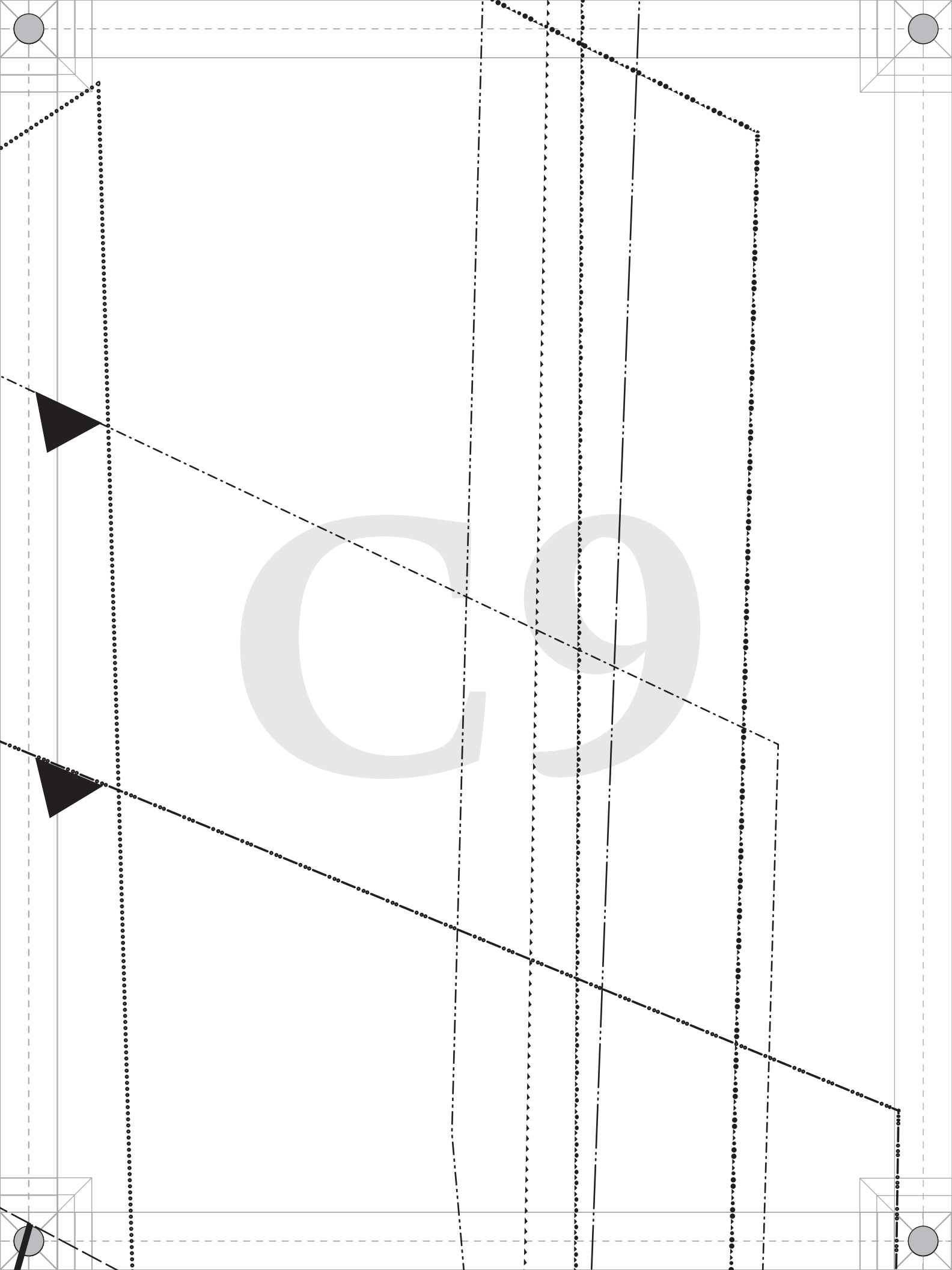

D1

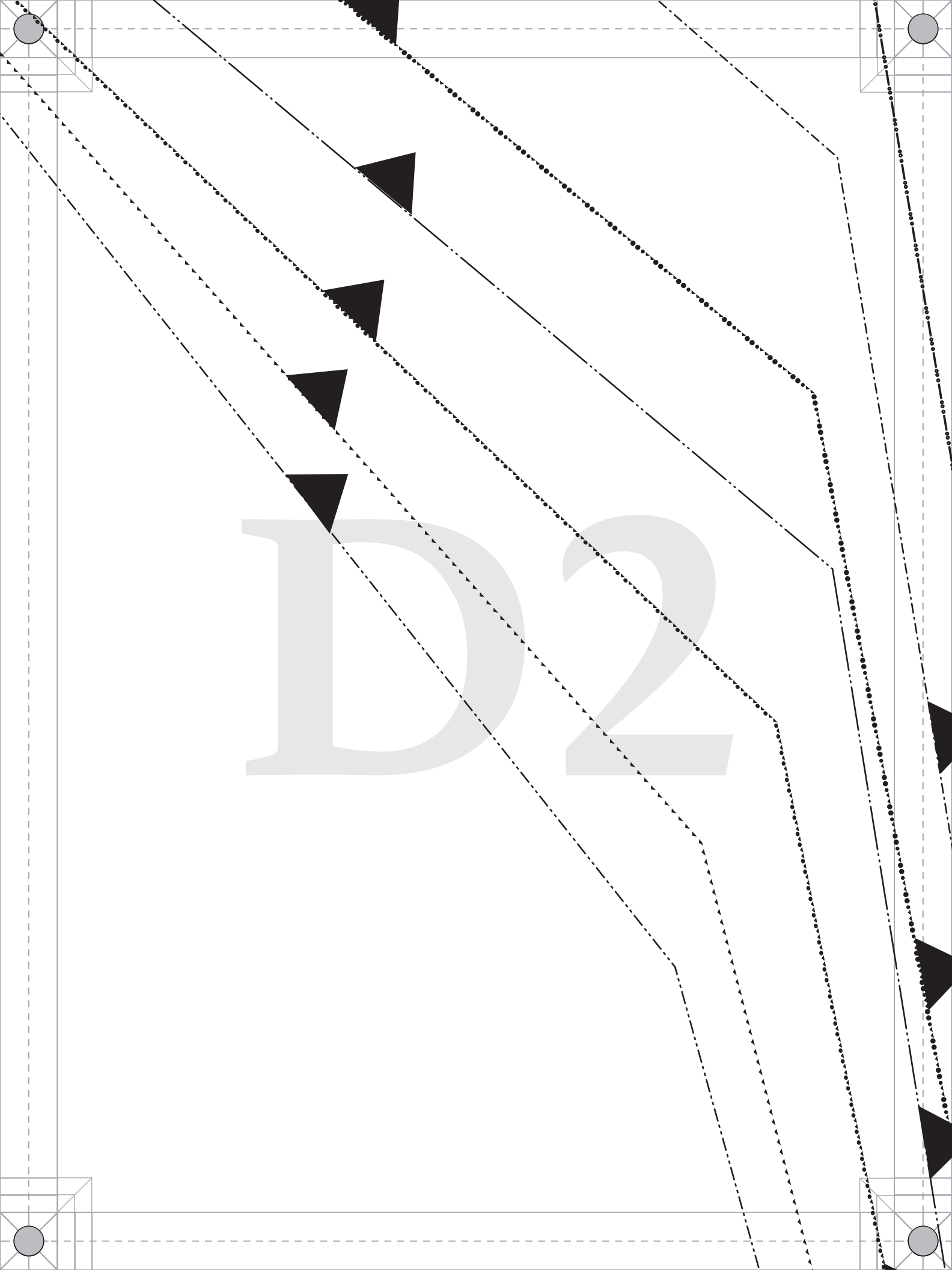
D2

D3

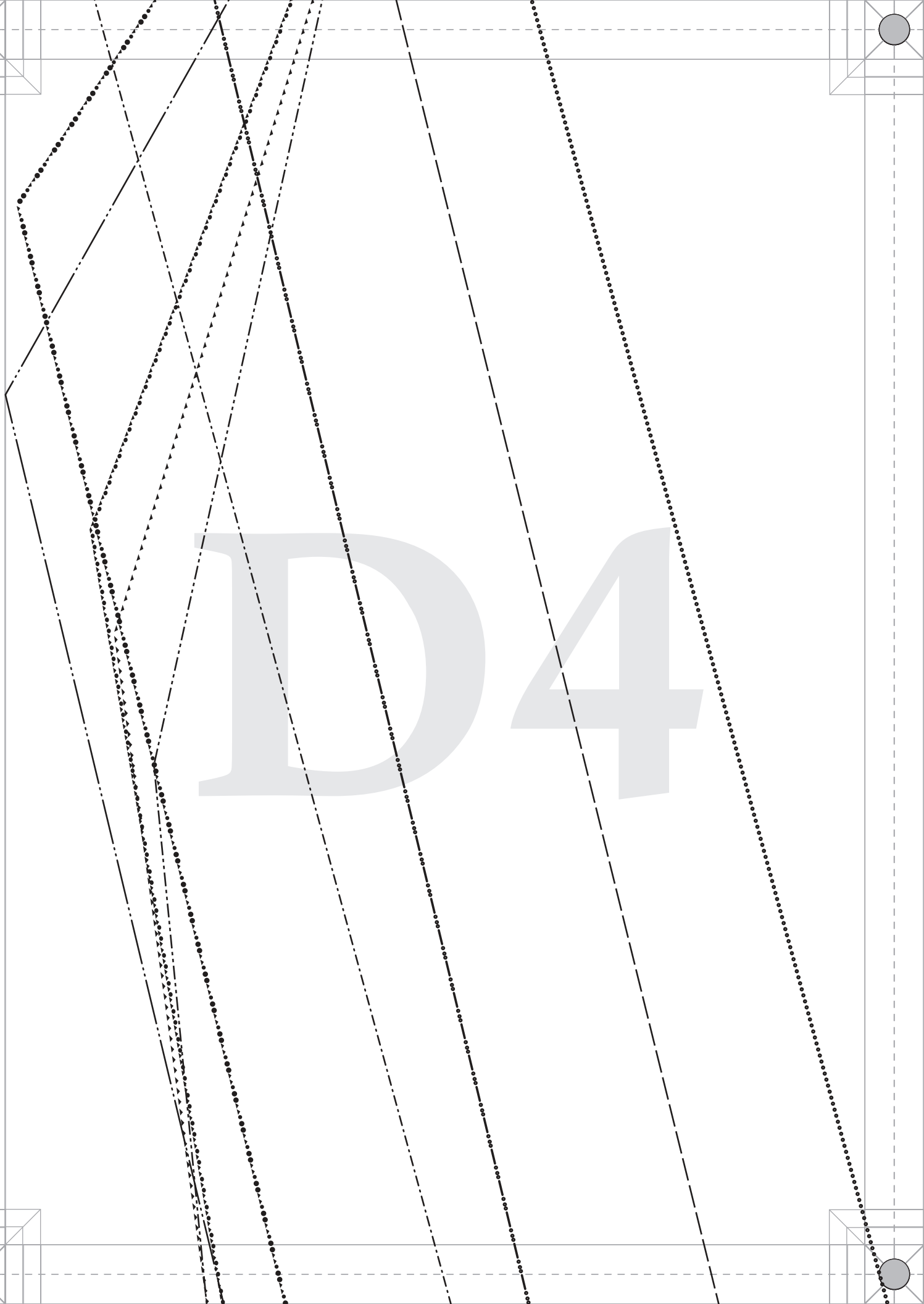
D4

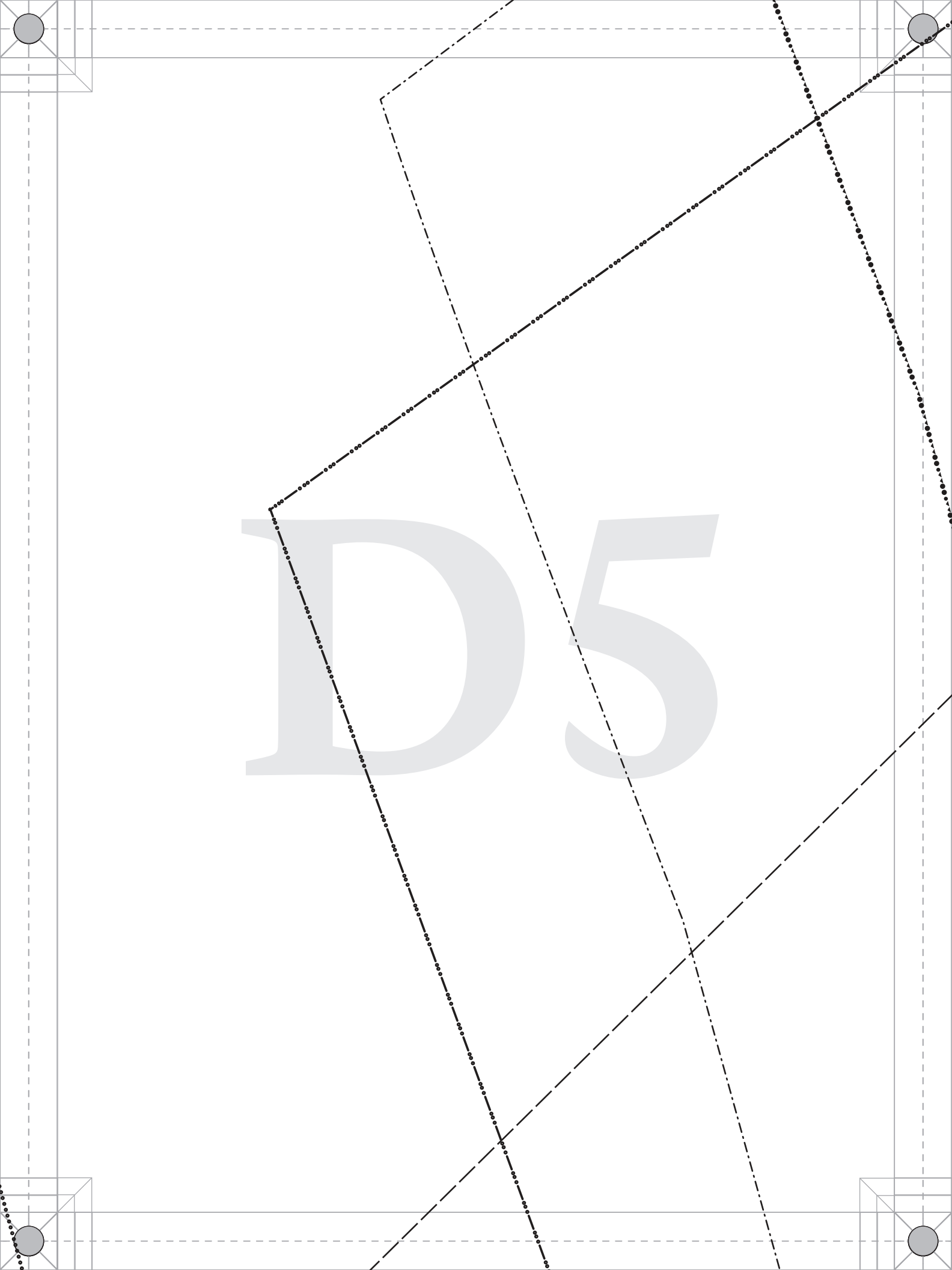
D5

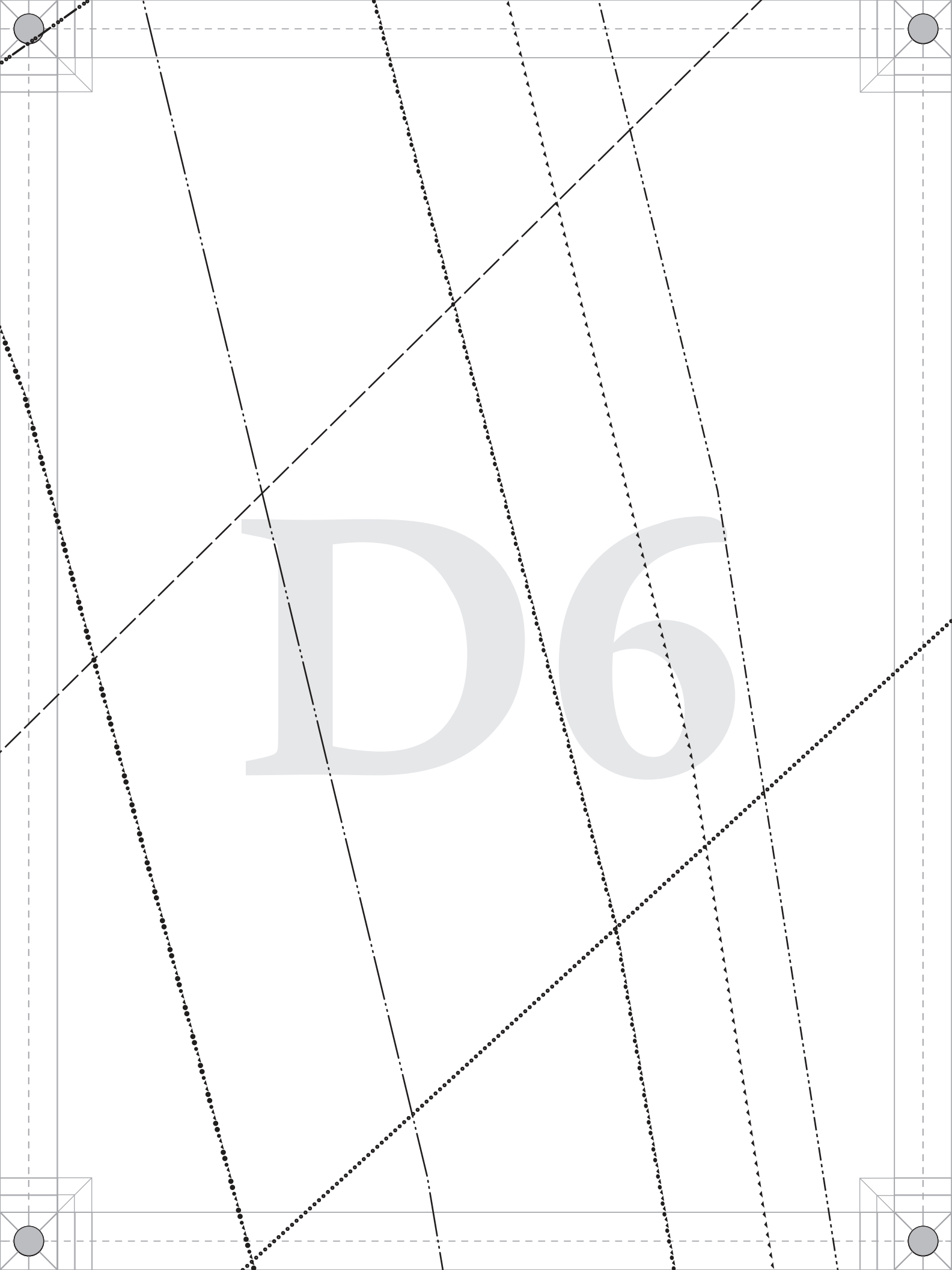
D6

D7

GRAINLINE

PATTERNS BY mood DESIGNER FABRICS MDF458

#MoodNobHillPattern

"The Nob Hill Draped Midi Dress" MDF458

B - FRONT LOWER

Cut 1

Ladies Sizes XS to 5XL

1/2" seam allowances (SA's) included

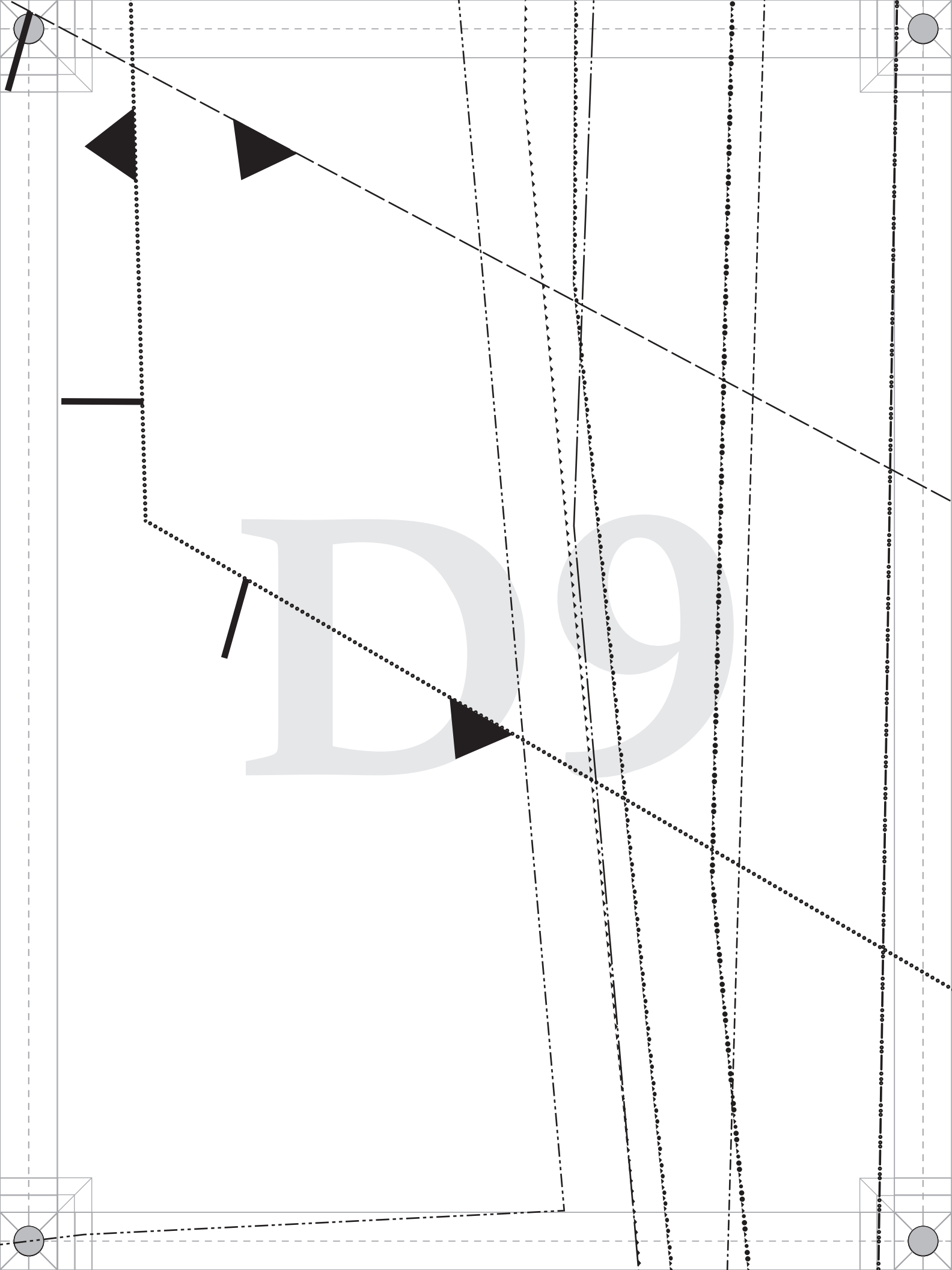
D9

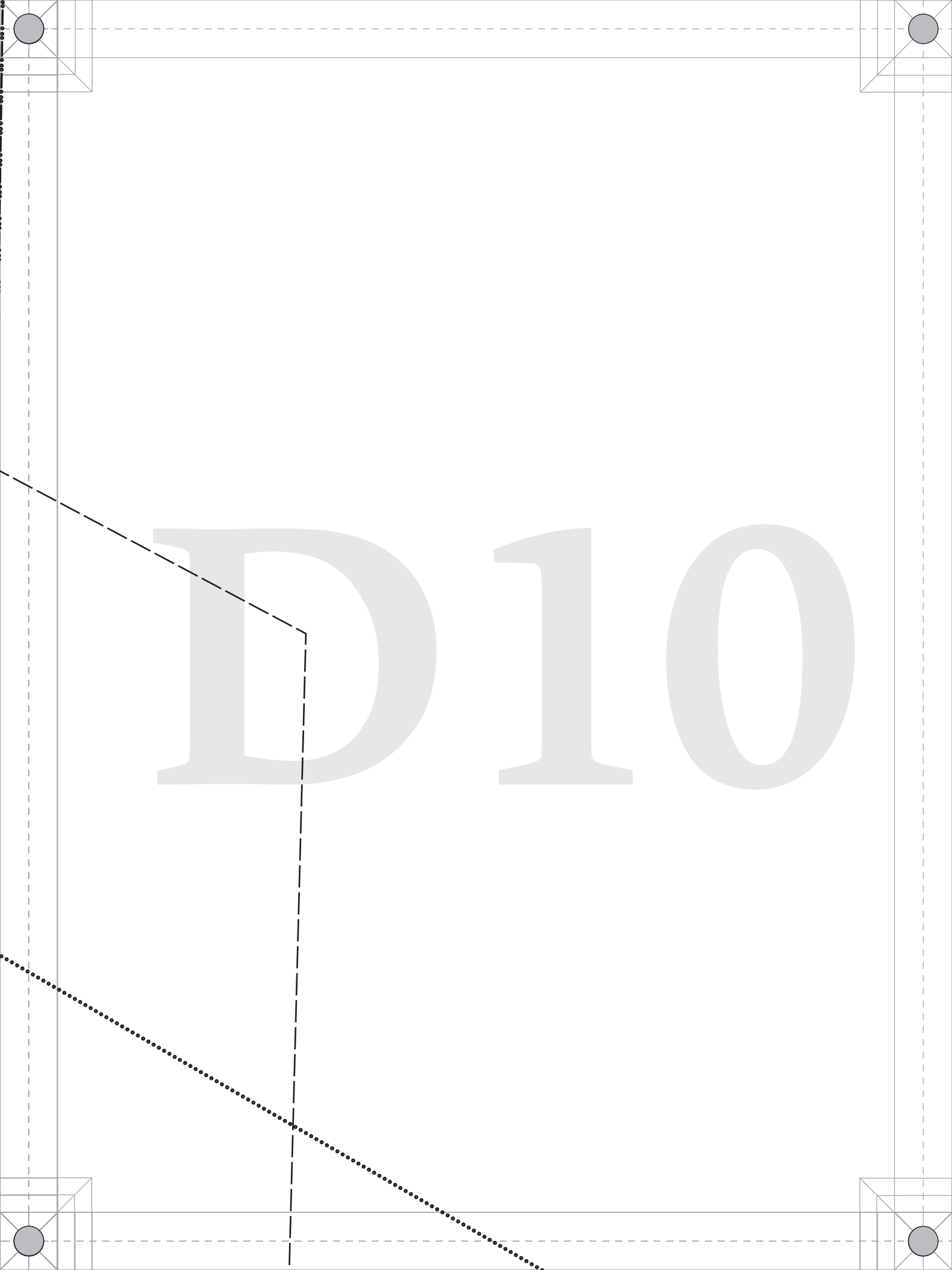
D10

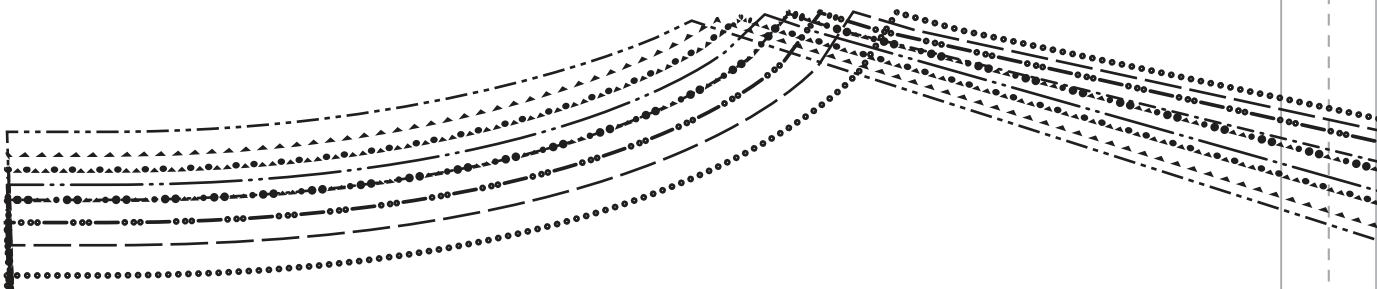

PATTERNS BY mood DESIGNER FABRICS

MDF458

#MoodNobHillPattern

"The Nob Hill Draped Midi Dress" MDF458

C - BACK

Cut 2 mirrored

Ladies Sizes XS to 5XL

1/2" seam allowances (SA's) included

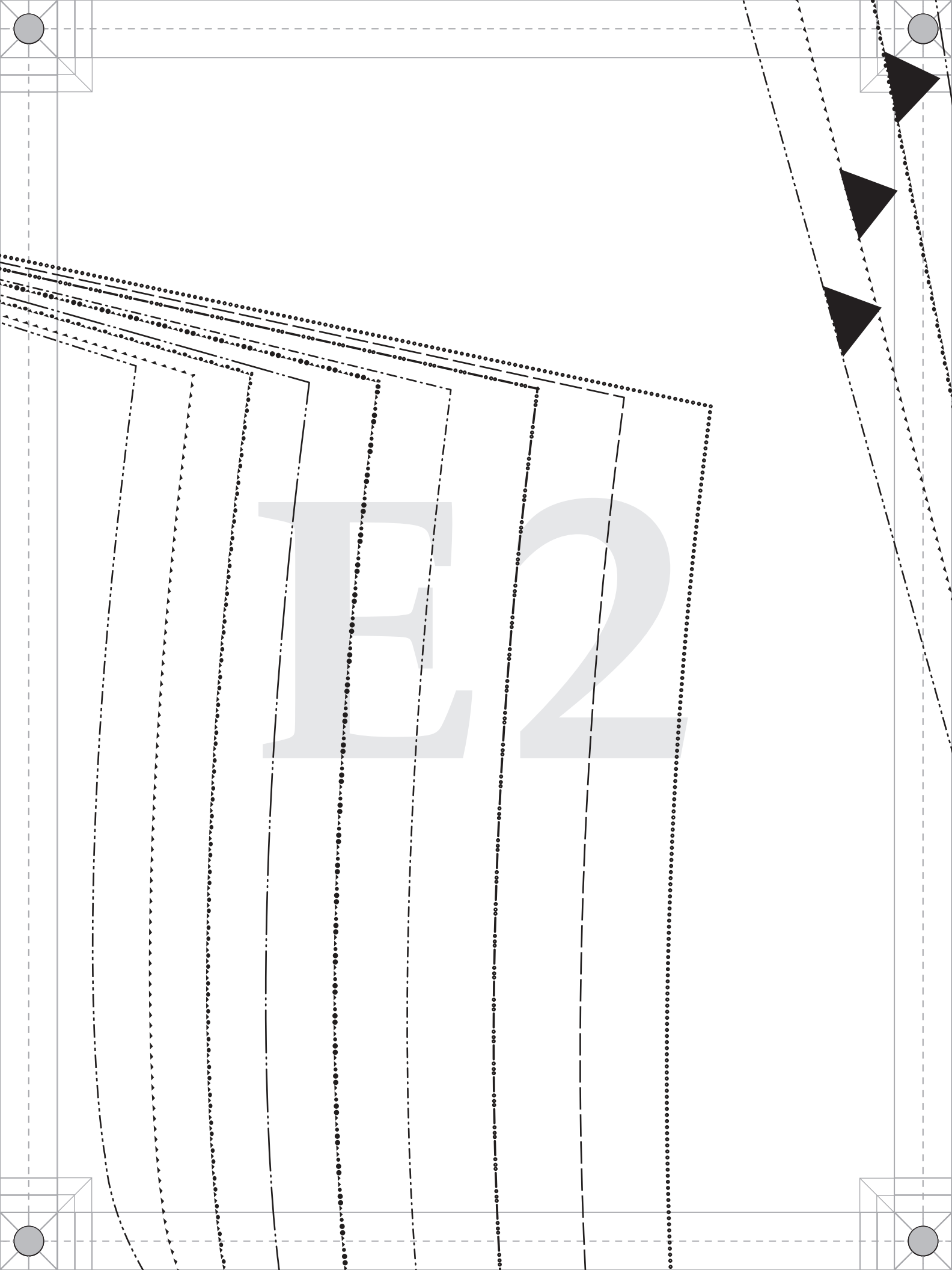
E2

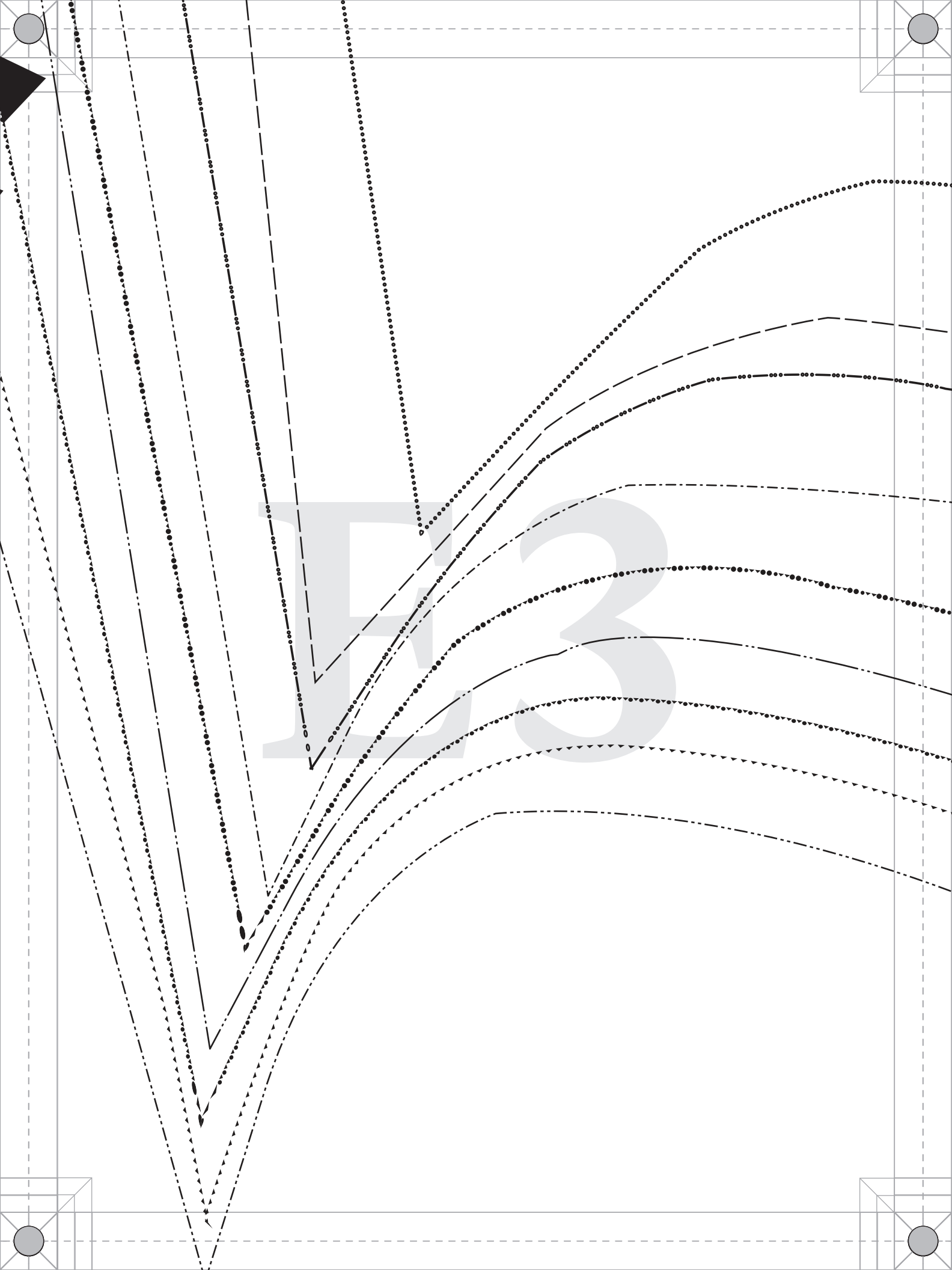

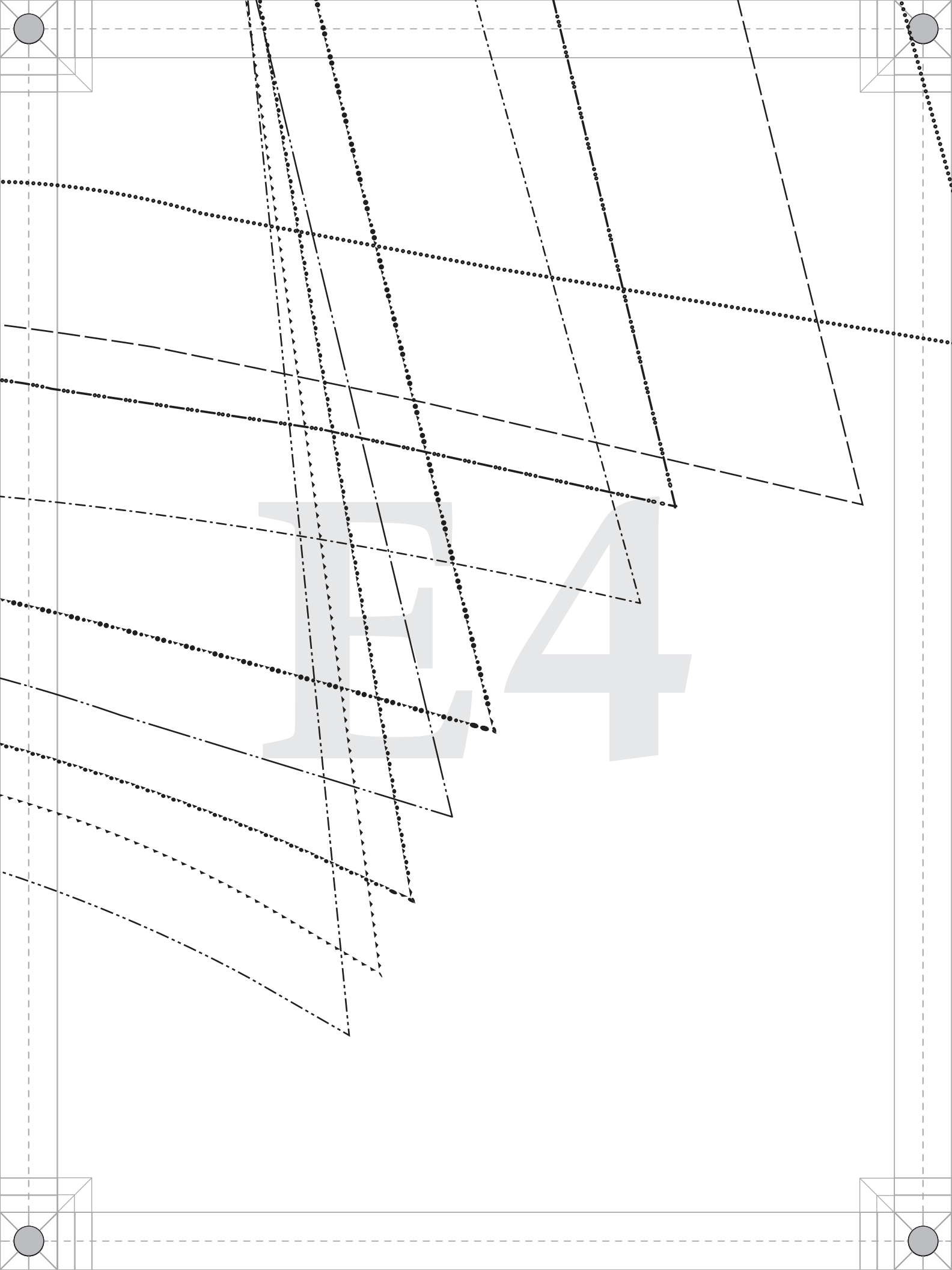

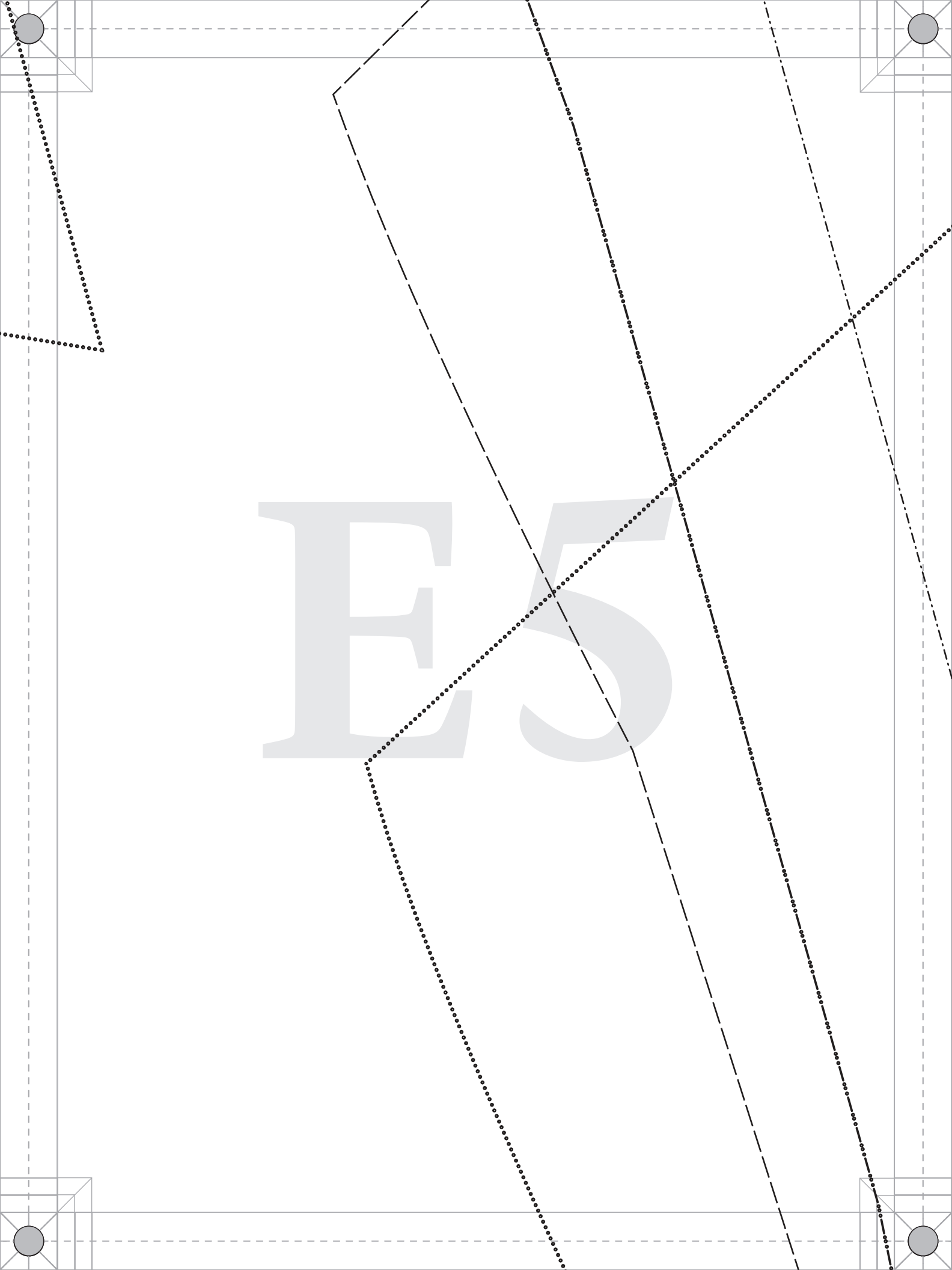
E5

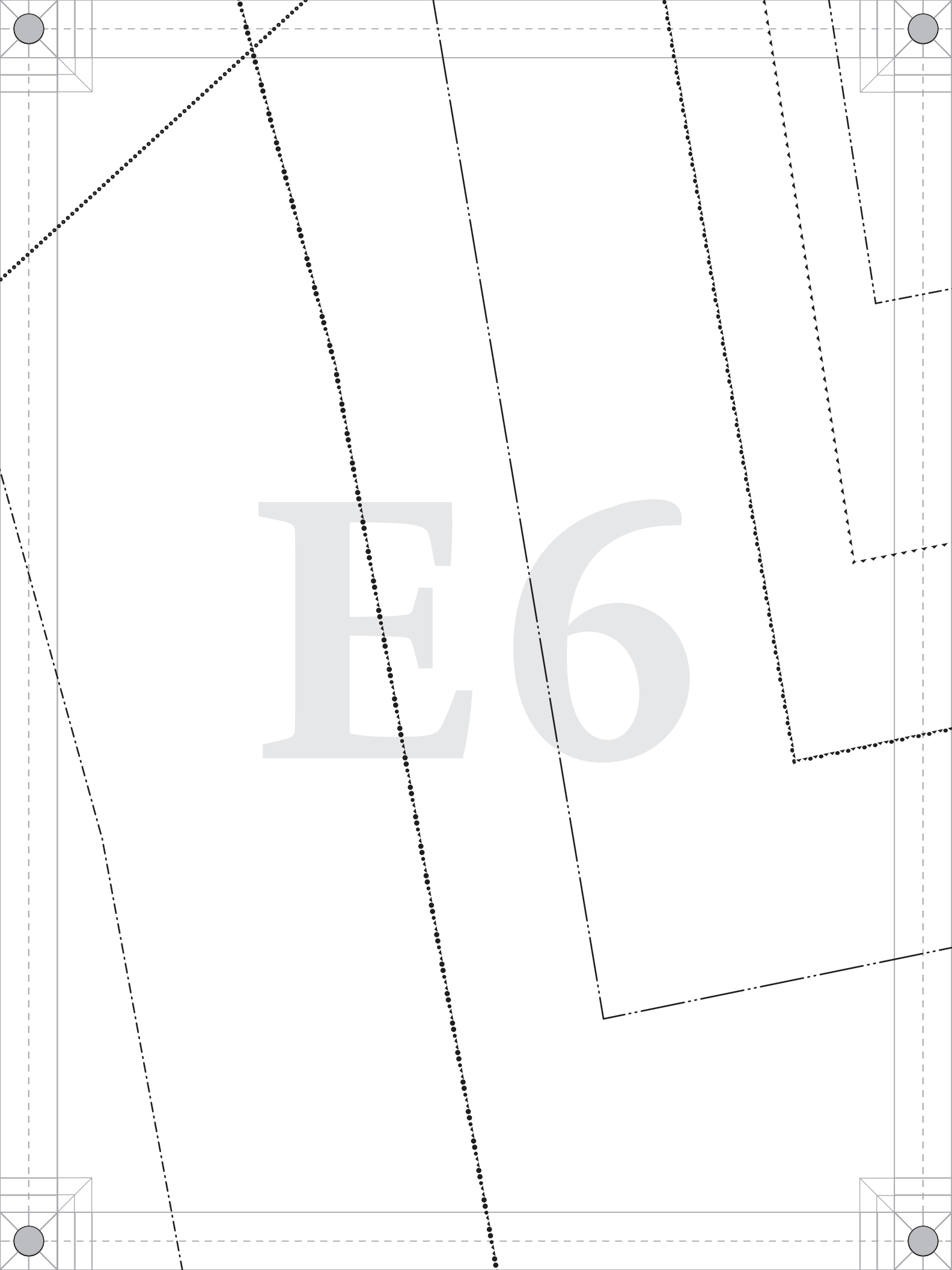
E6

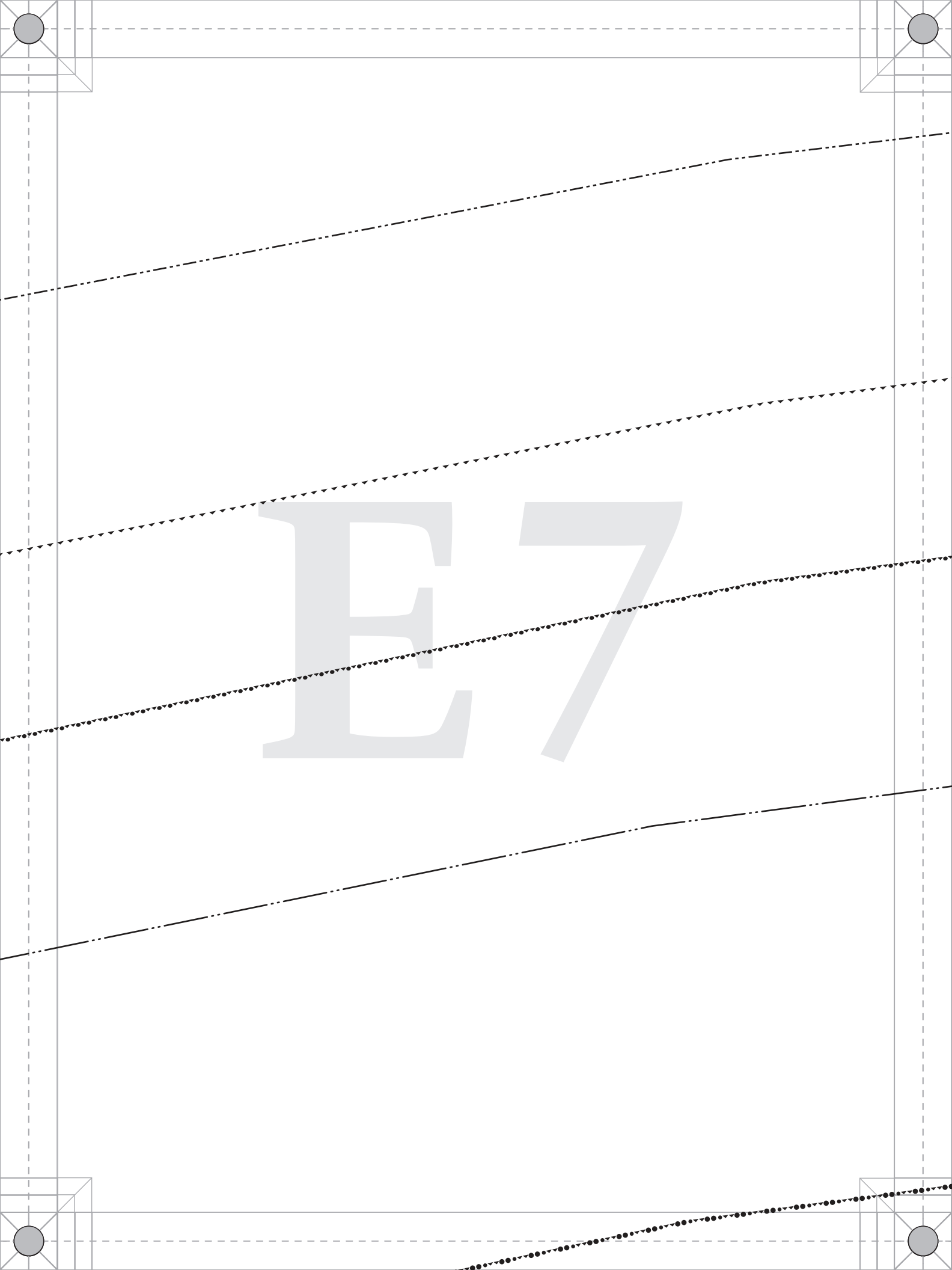
E7

E8

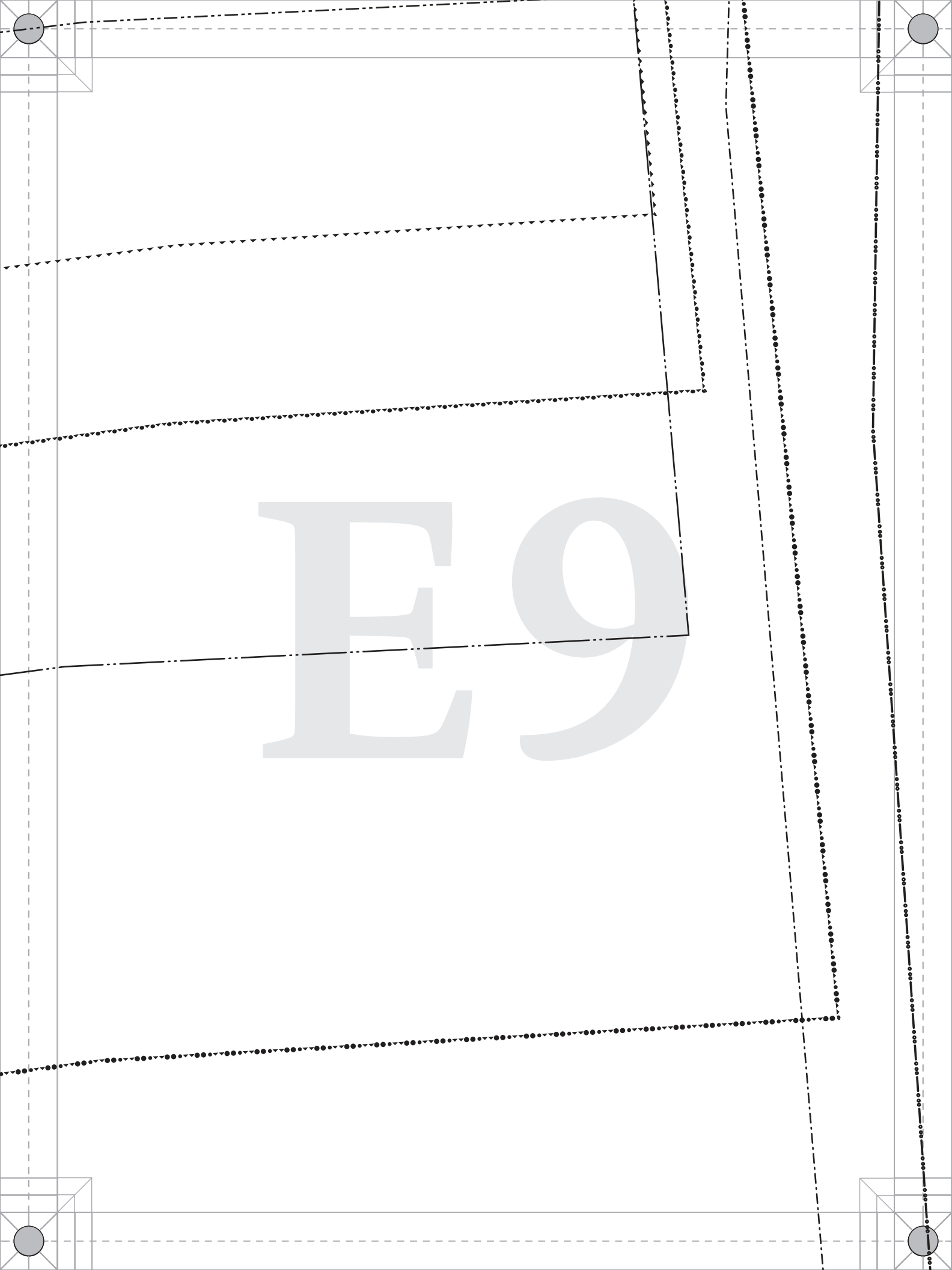
E9

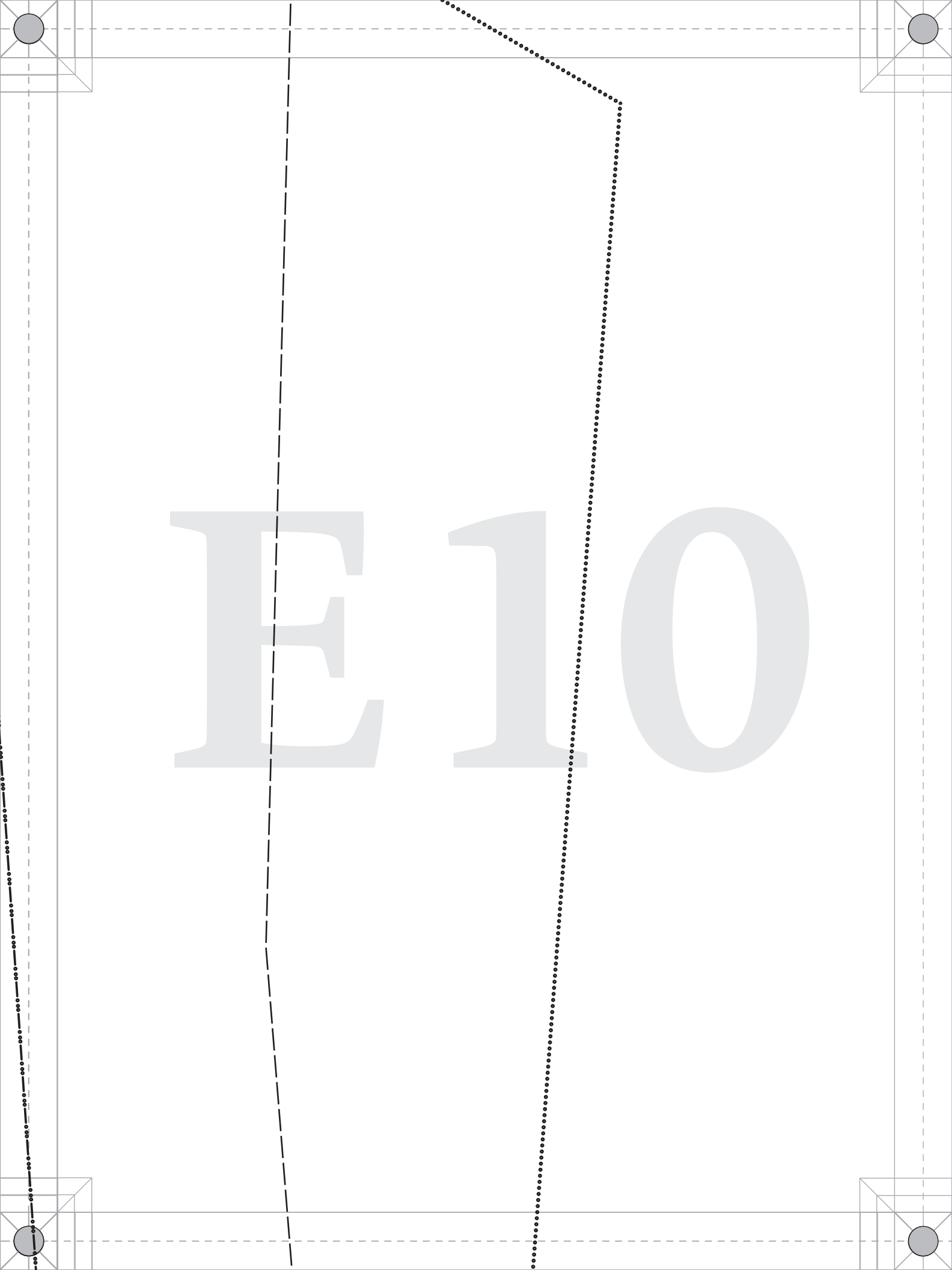
E10

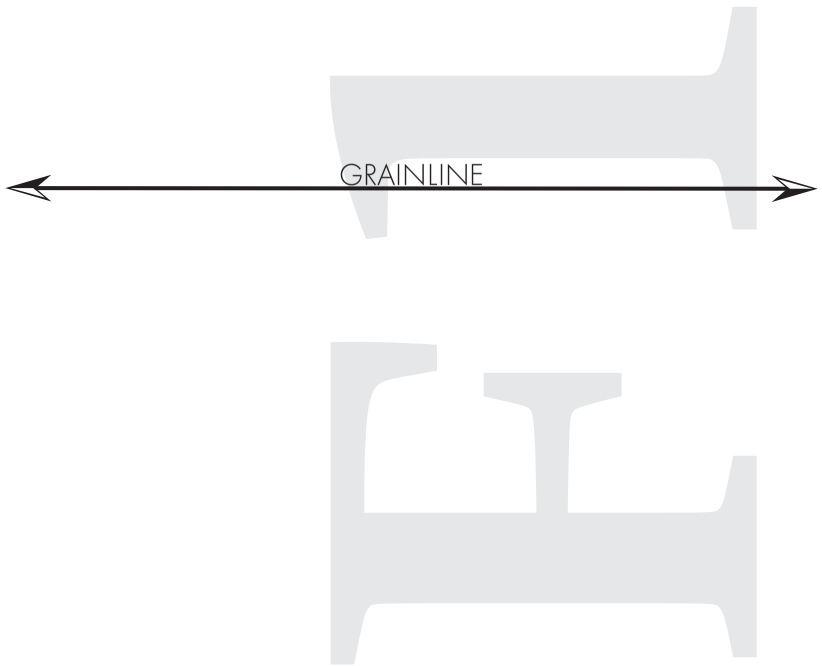
GRAINLINE

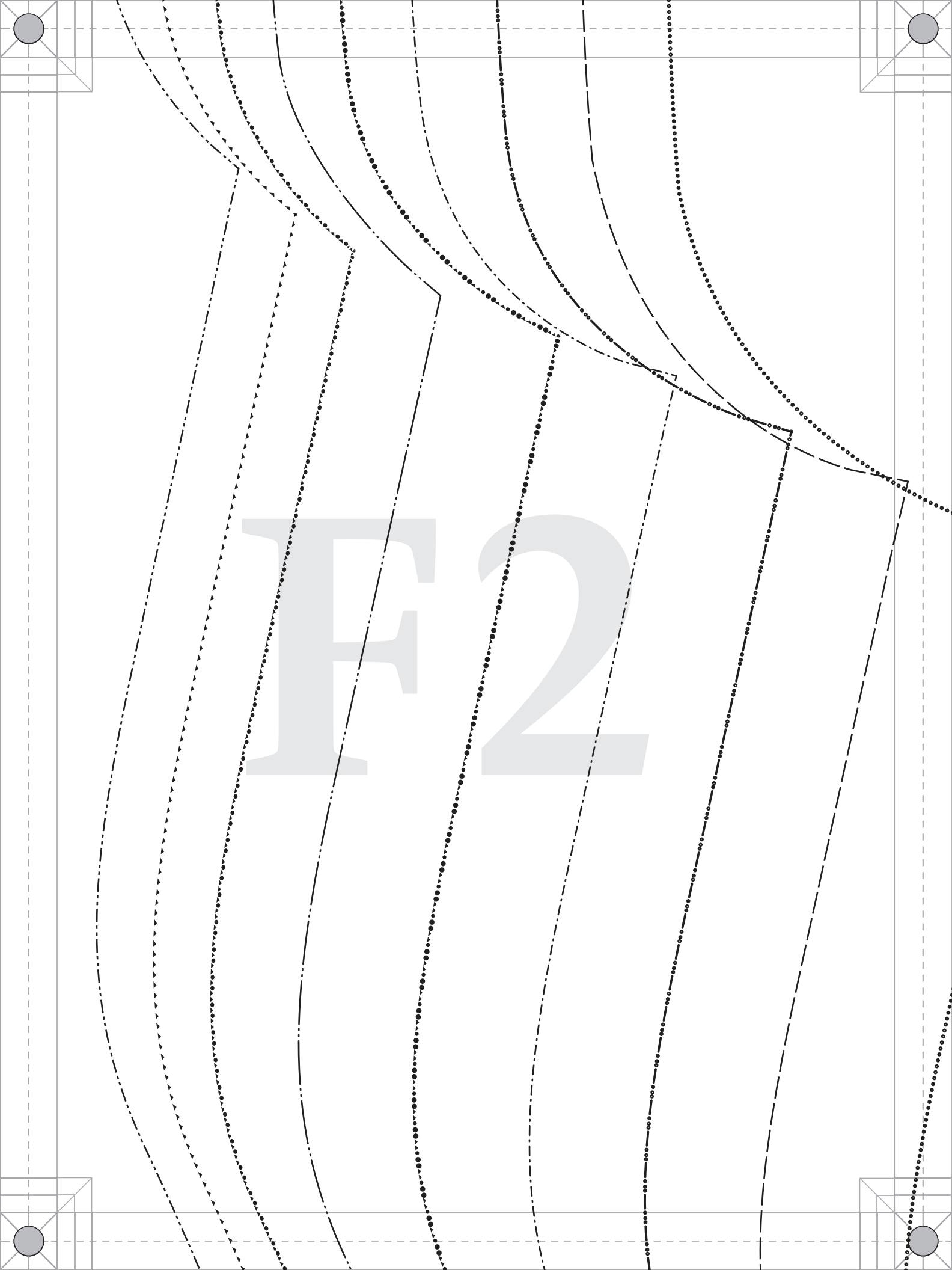
E2

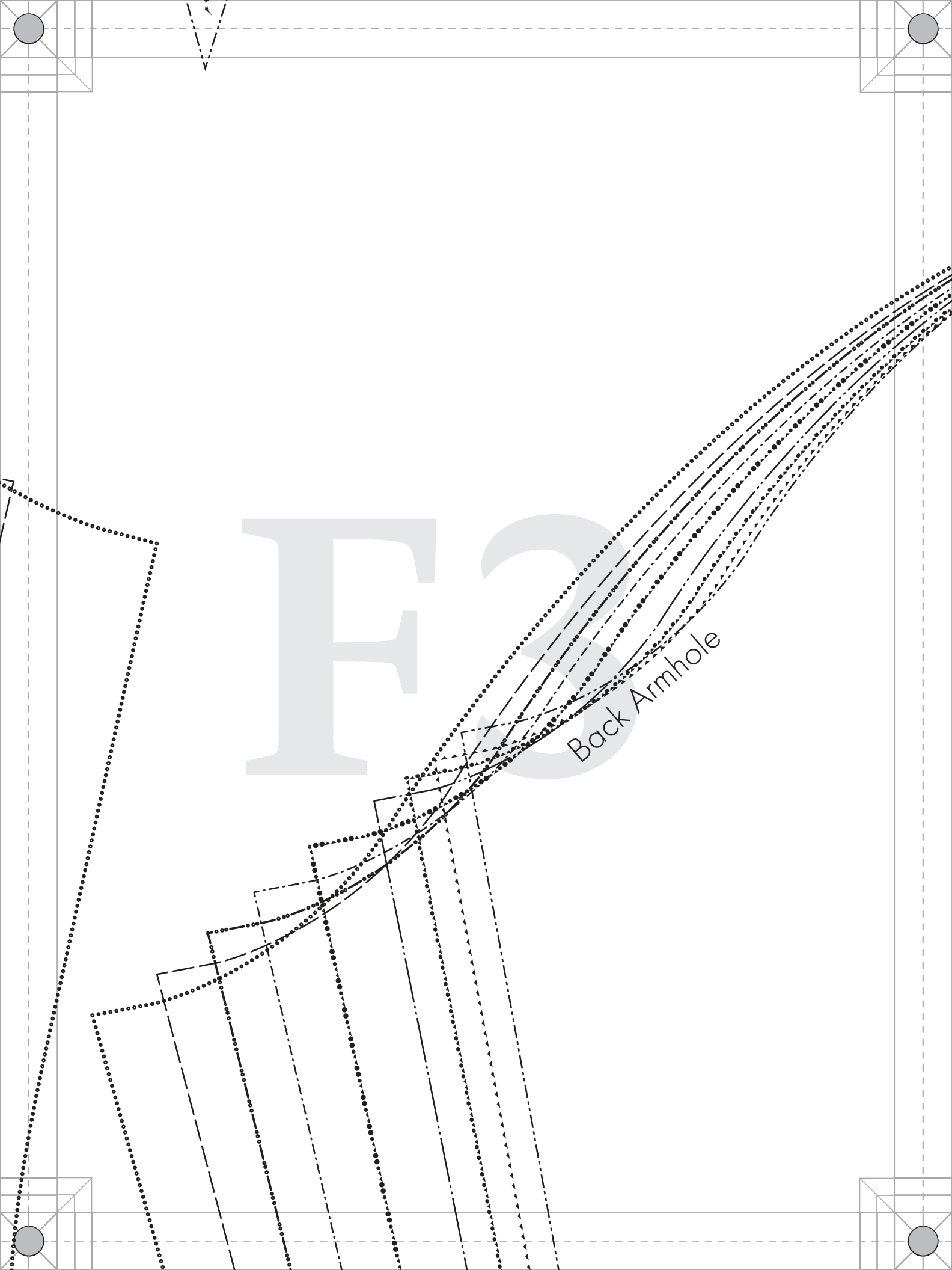
Back Armhole

PATTERNS BY mood DESIGNER FABRICS

MDF458

#MoodNobHillPattern

"The Nob Hill Draped Midi Dress" MDF458

D - SLEEVES

Cut 2 mirrored

Ladies Sizes XS to 5XL

1/2" seam allowances (SA's) included

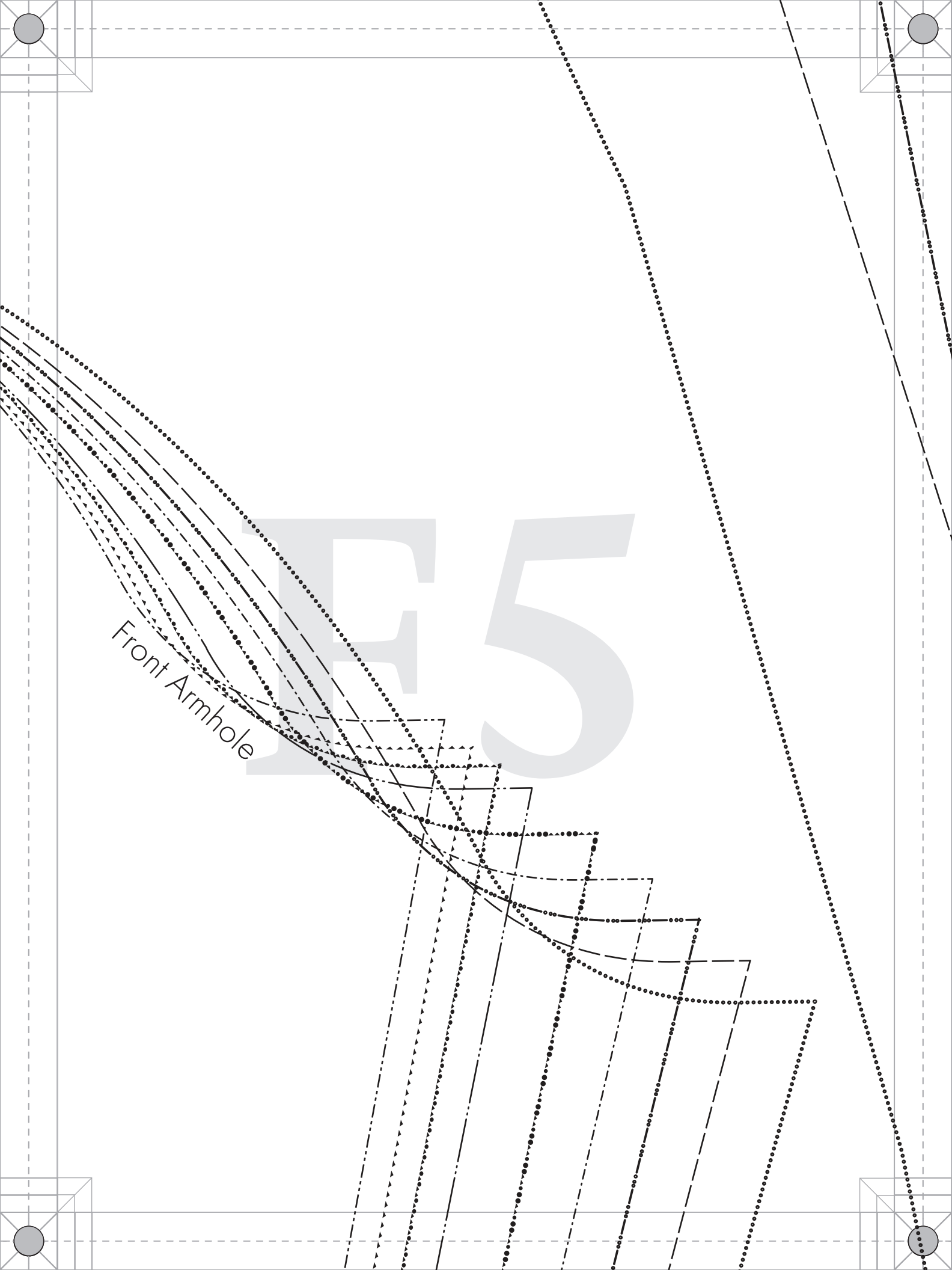
E5
Front Armhole

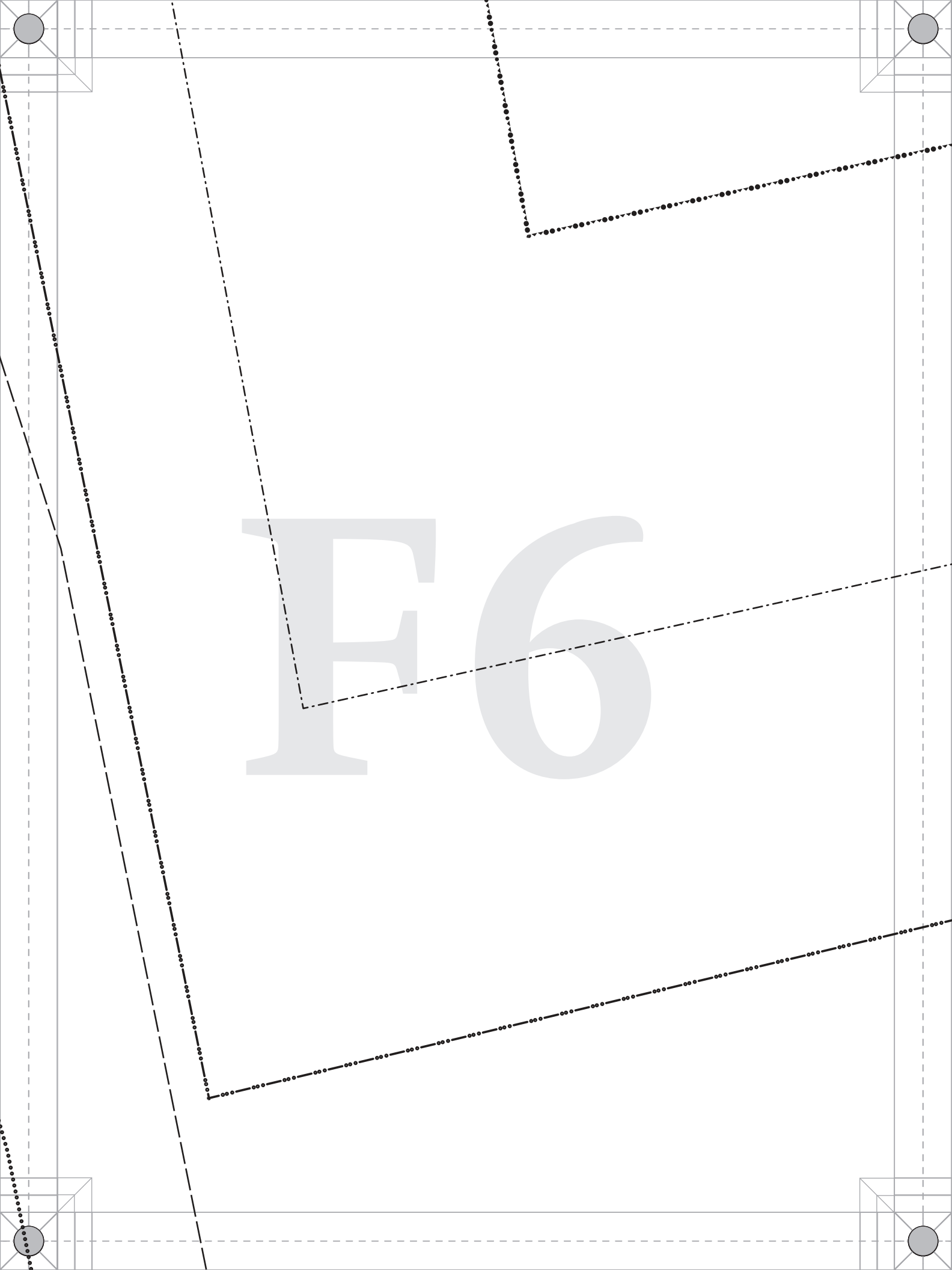
F6

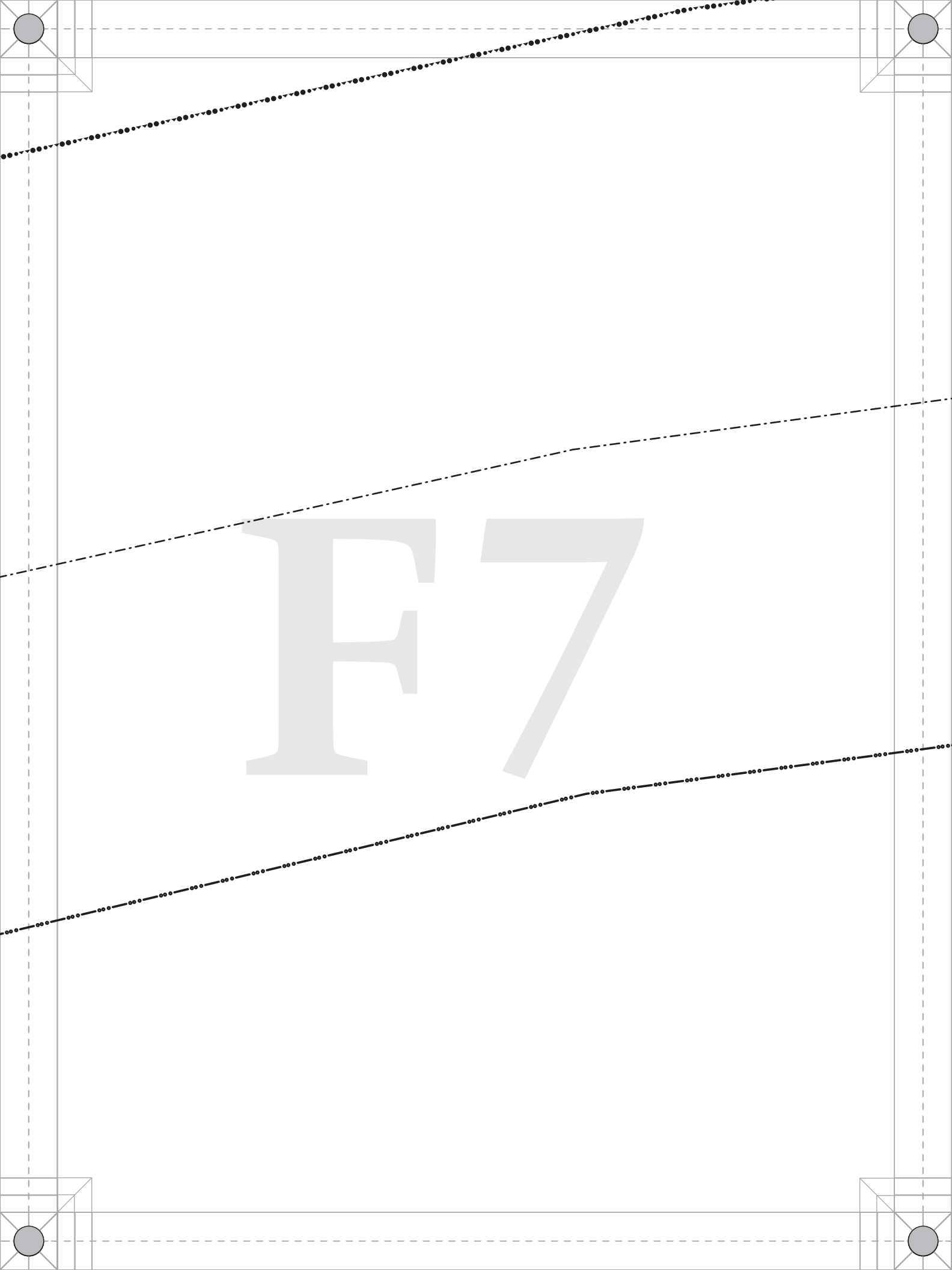
F7

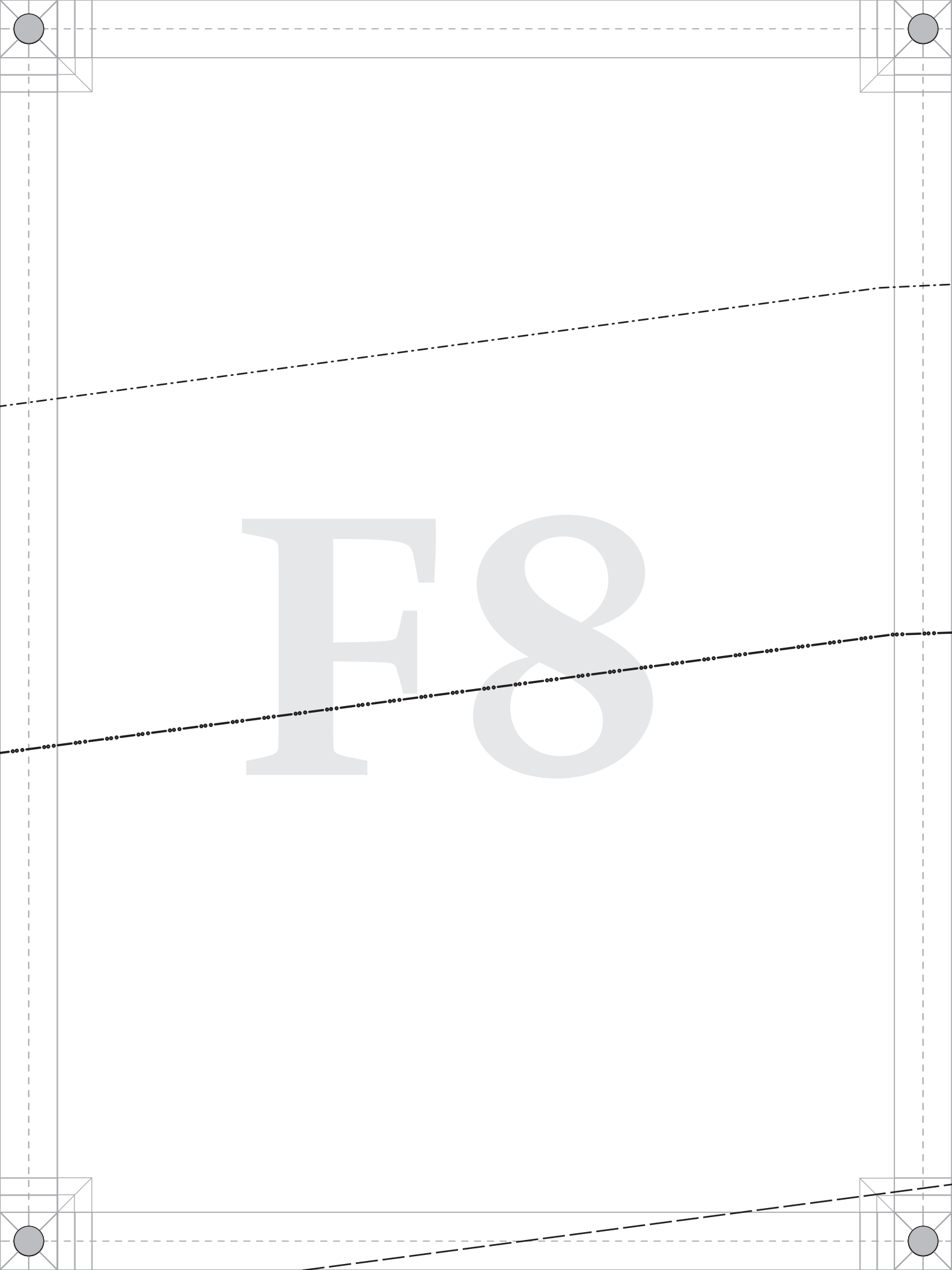
F8

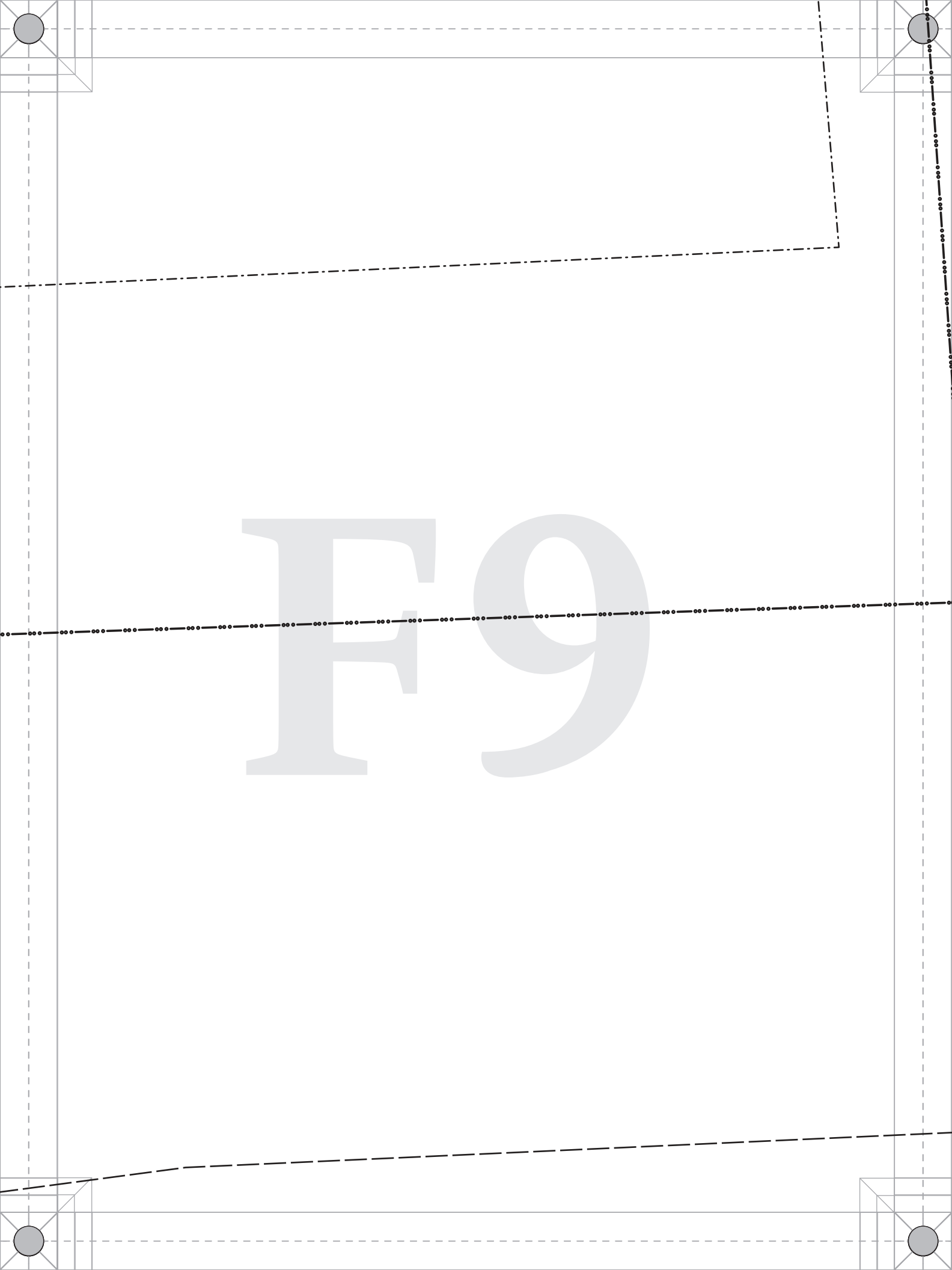
F9

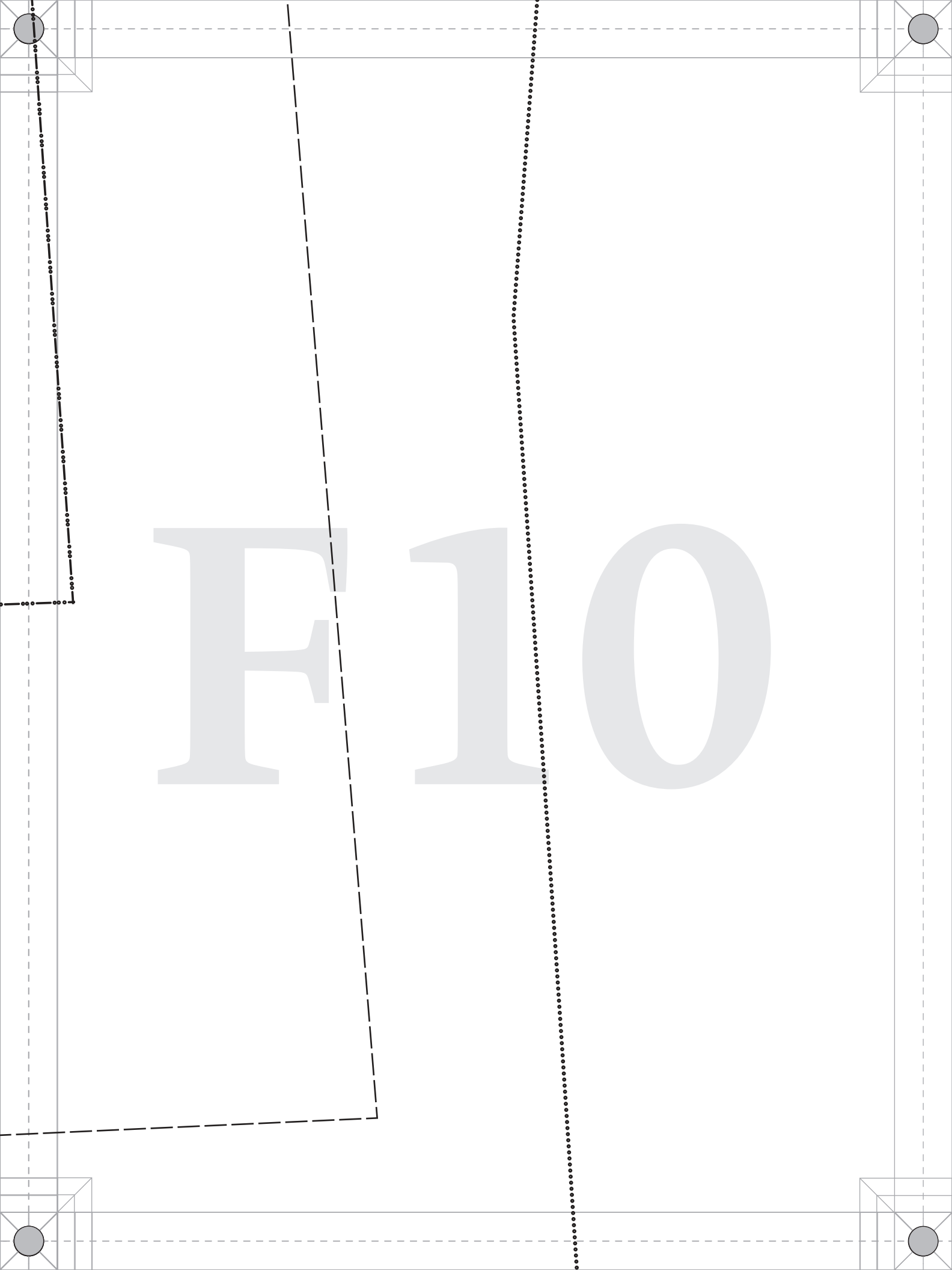
F10

G1

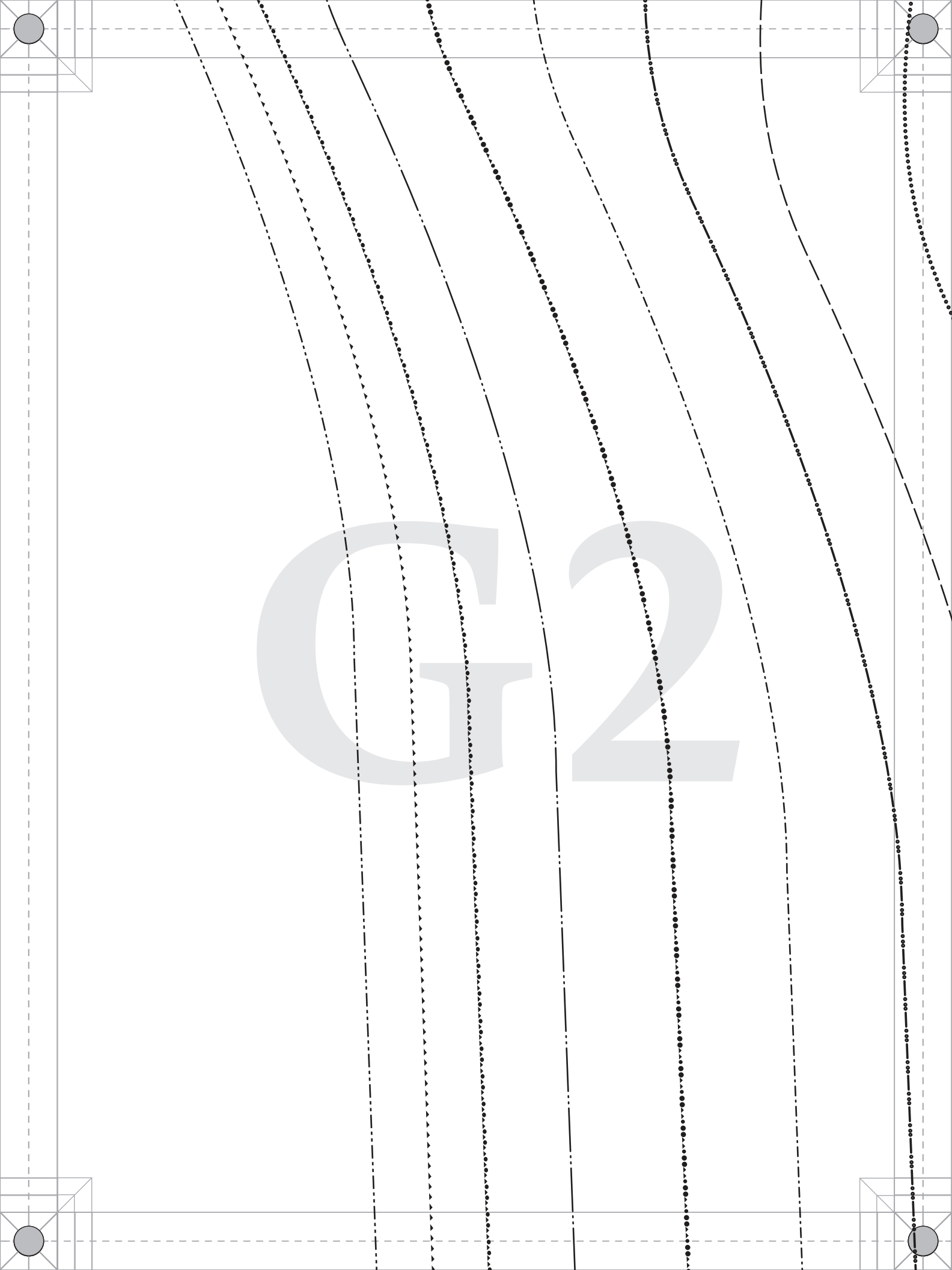
G2

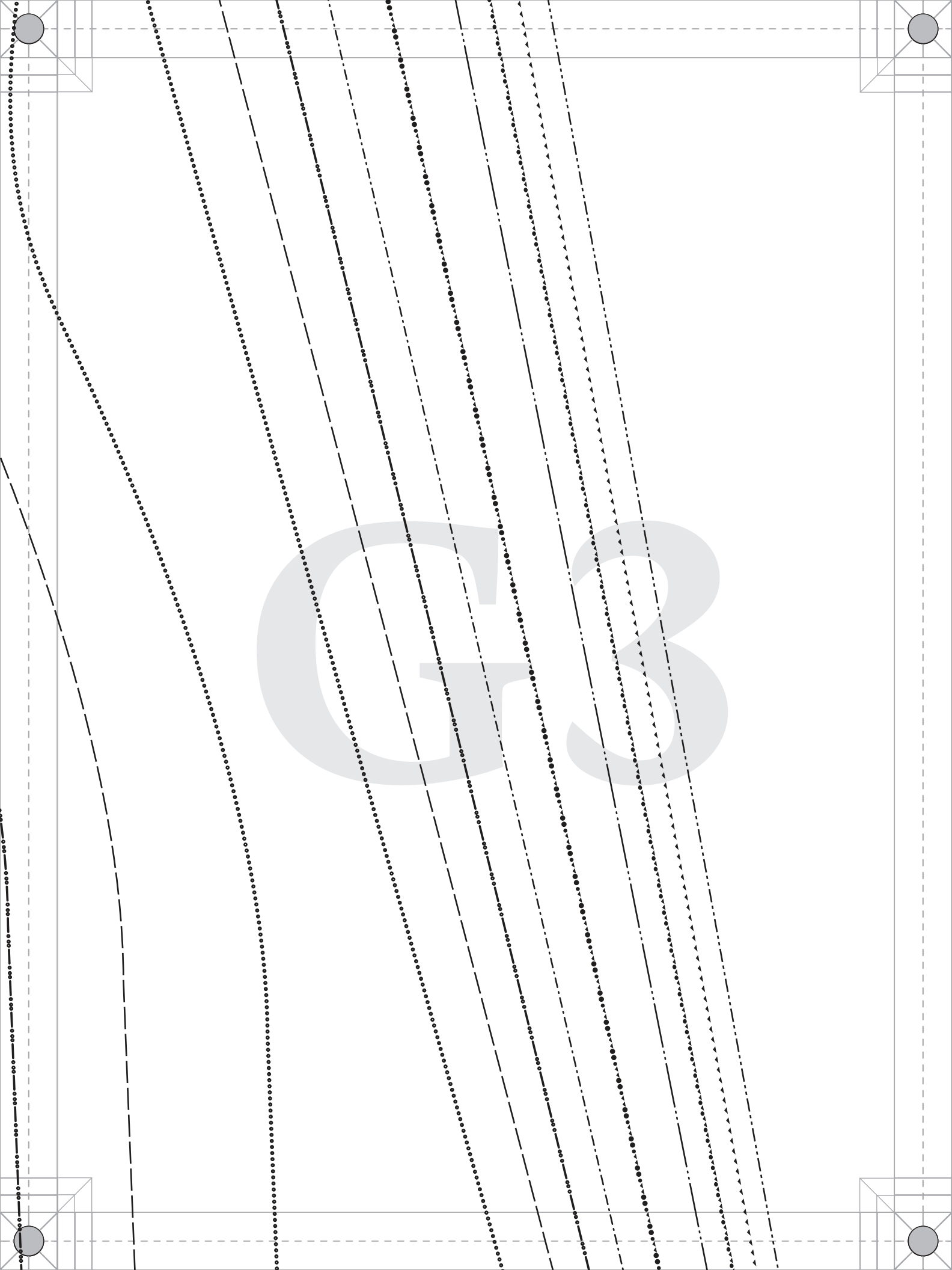



G4

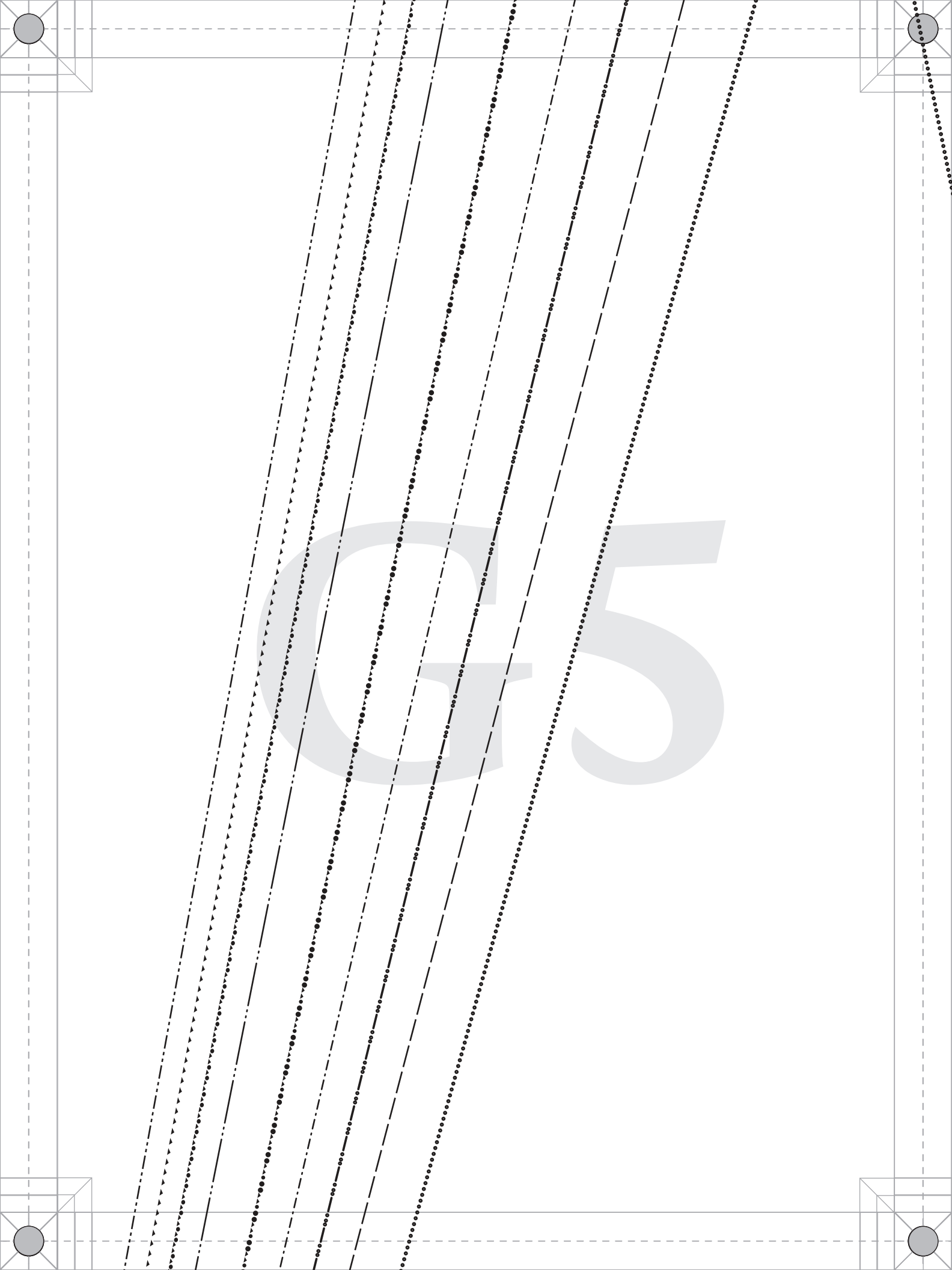

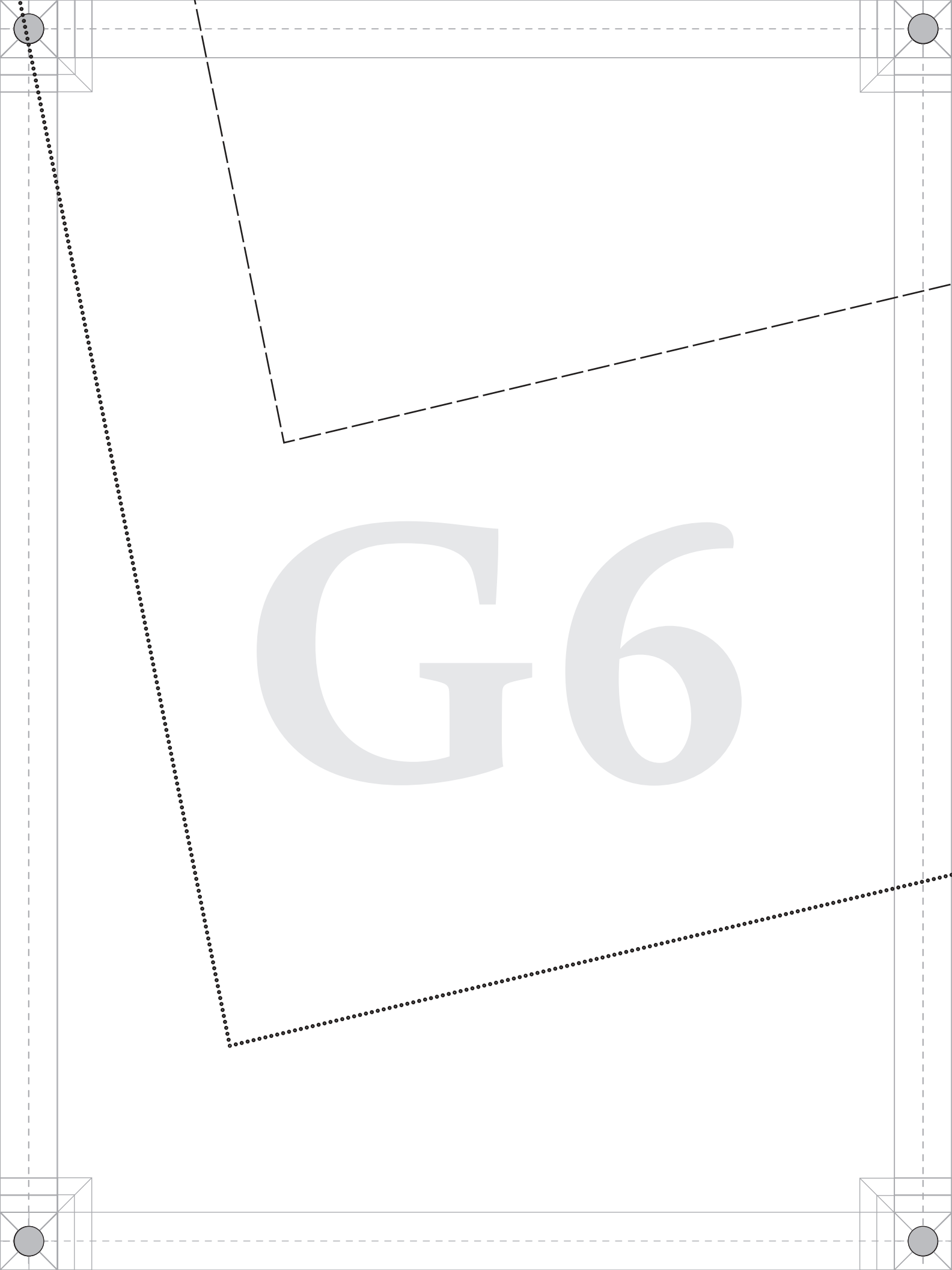
G6

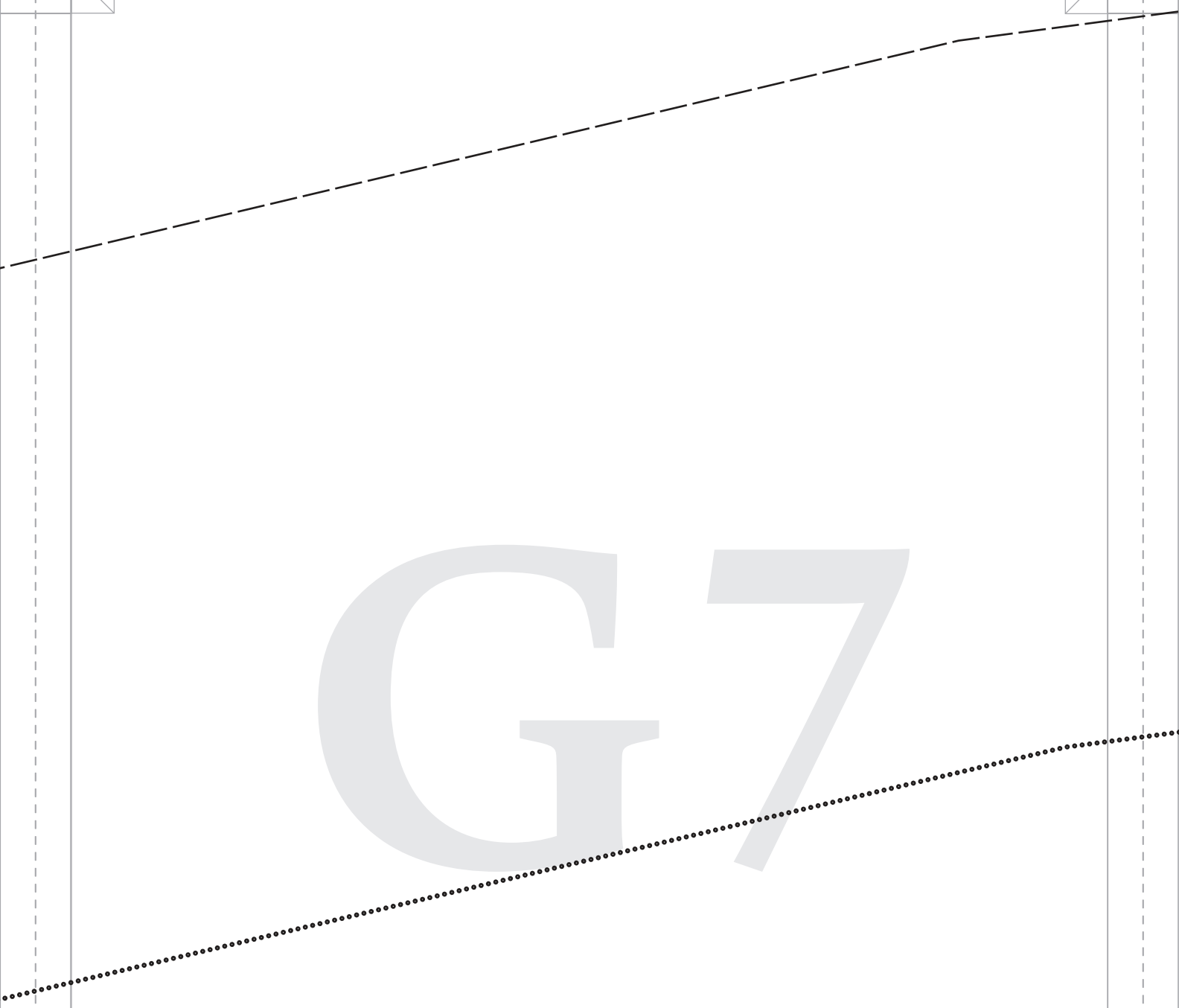
G7

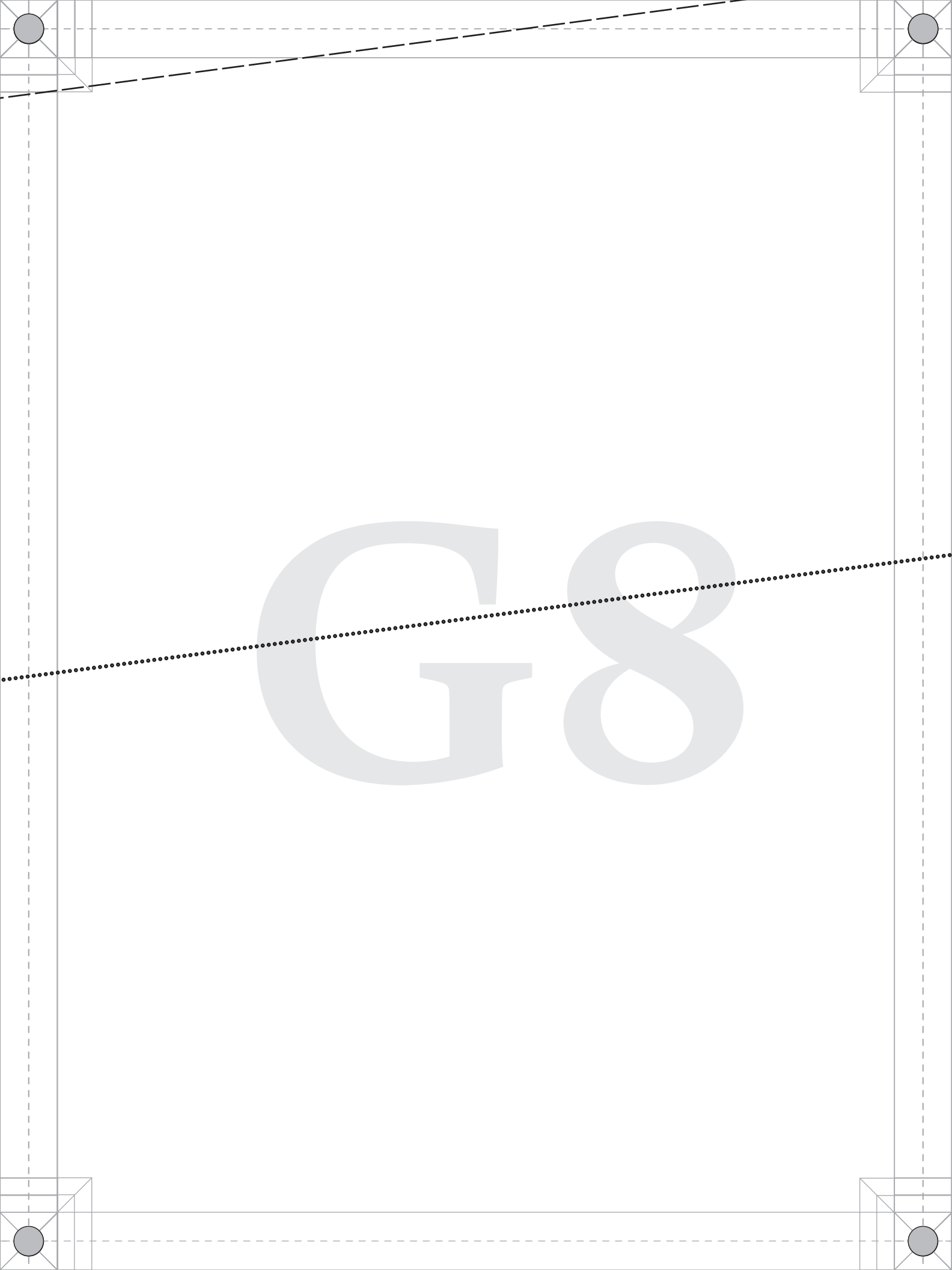
G8

G9

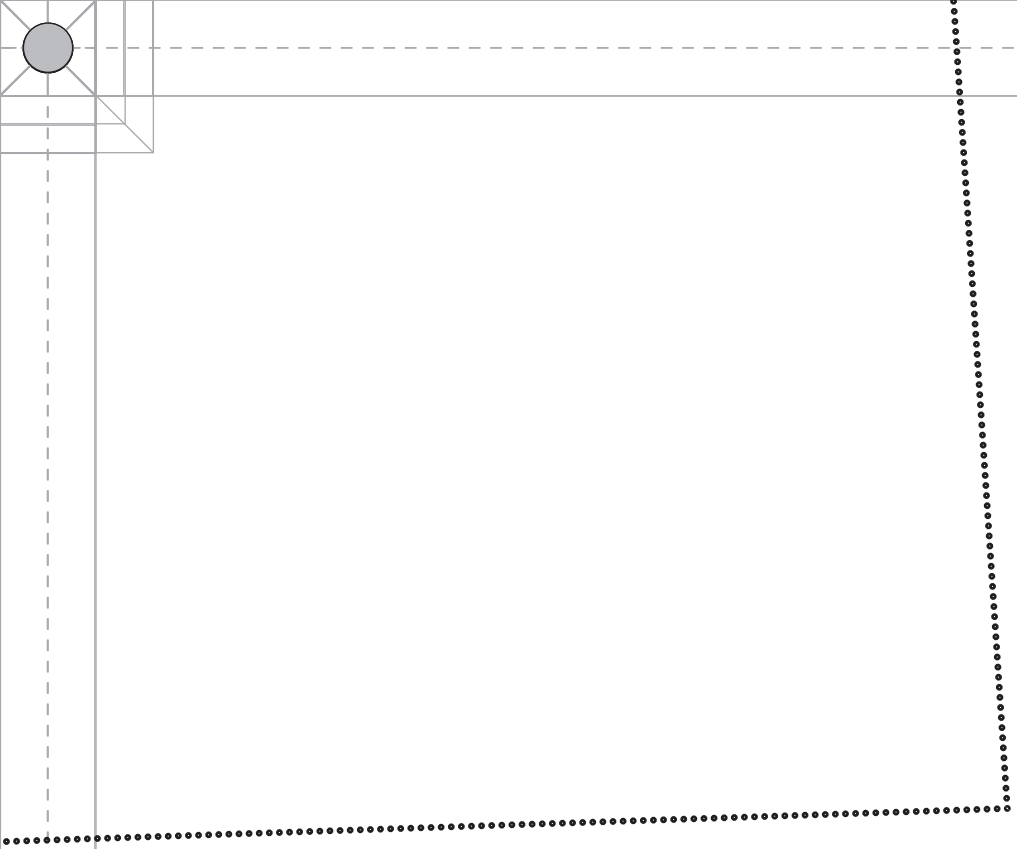

G10

H1

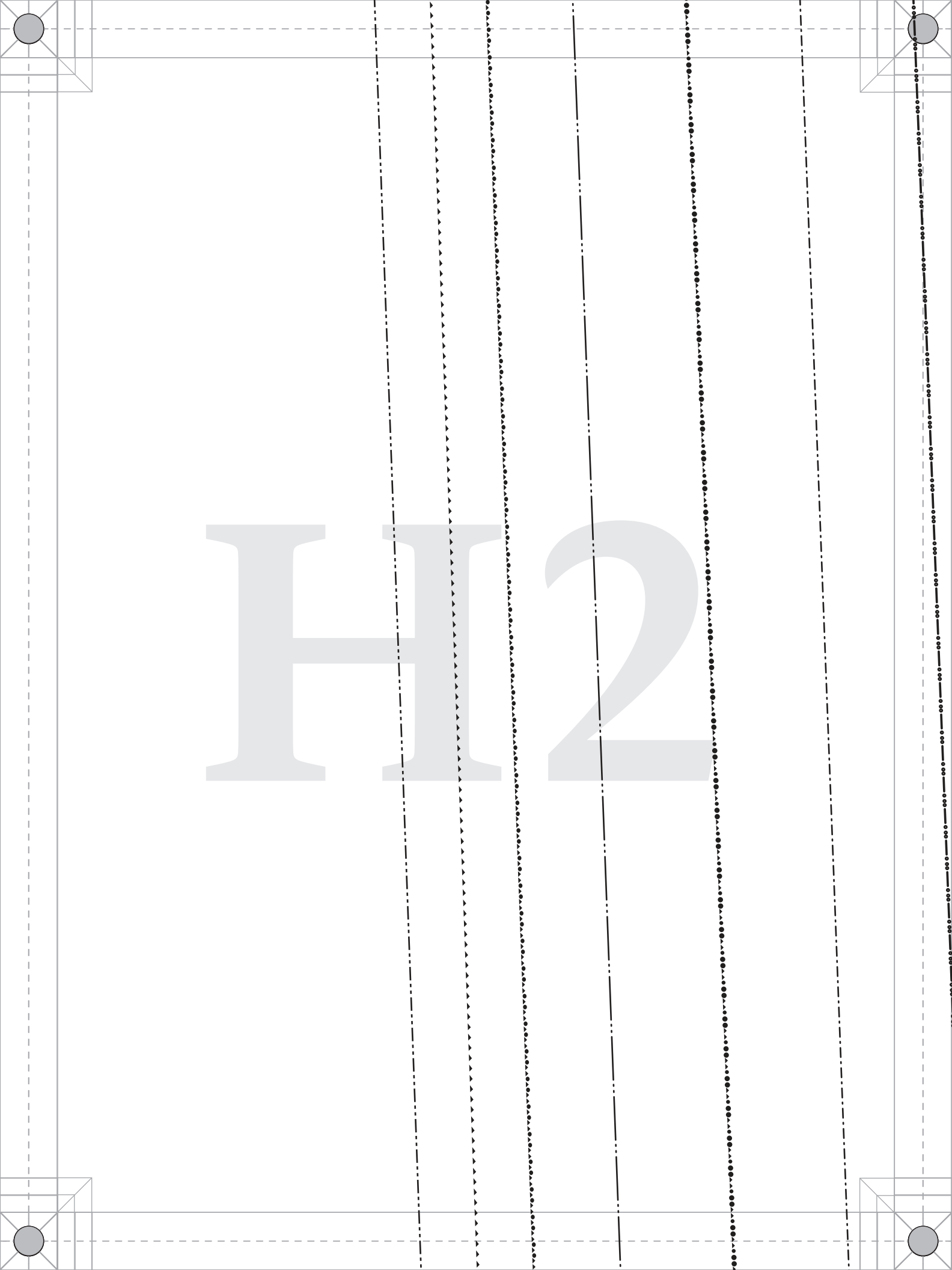
H2

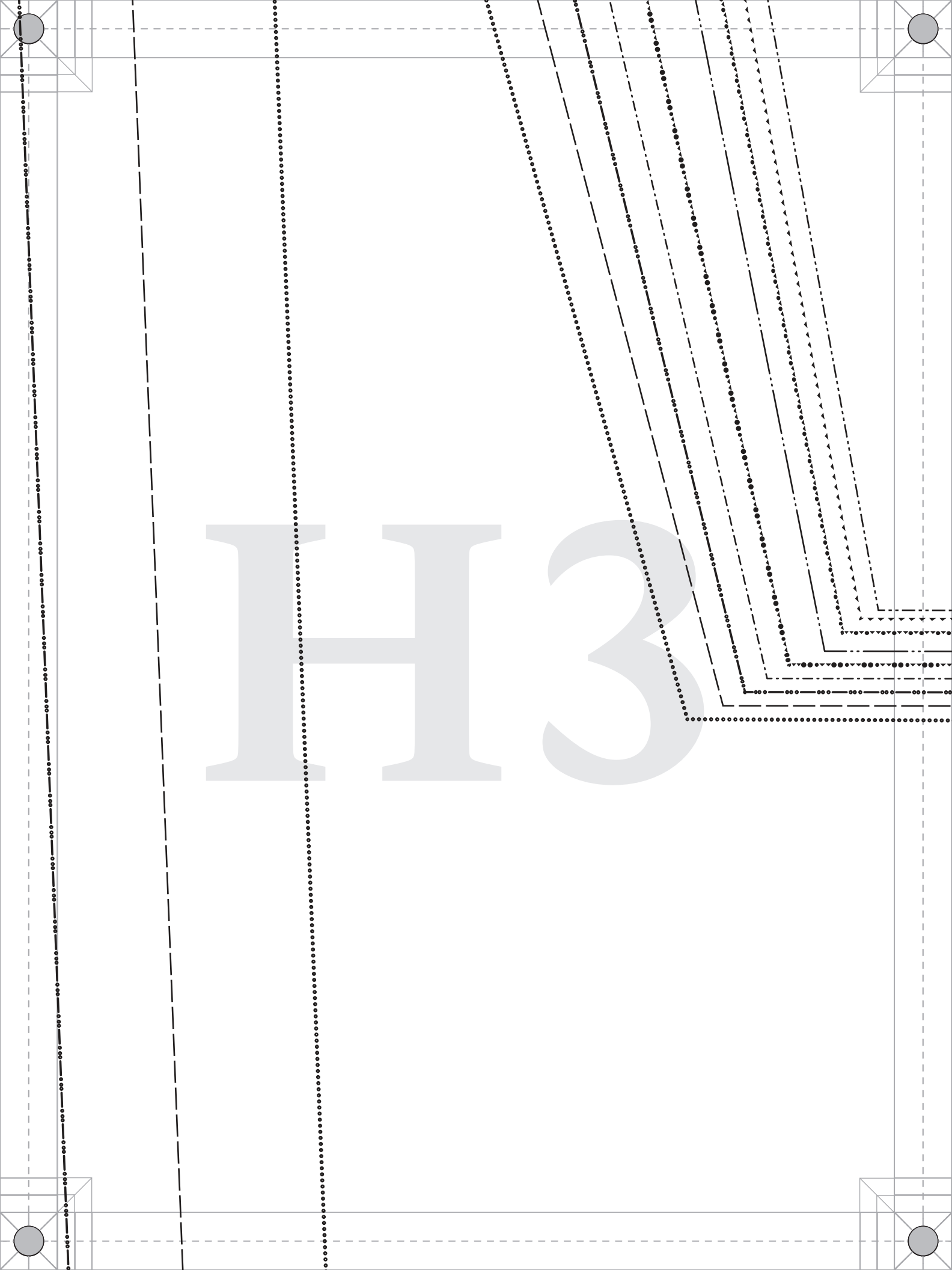
H3

H4

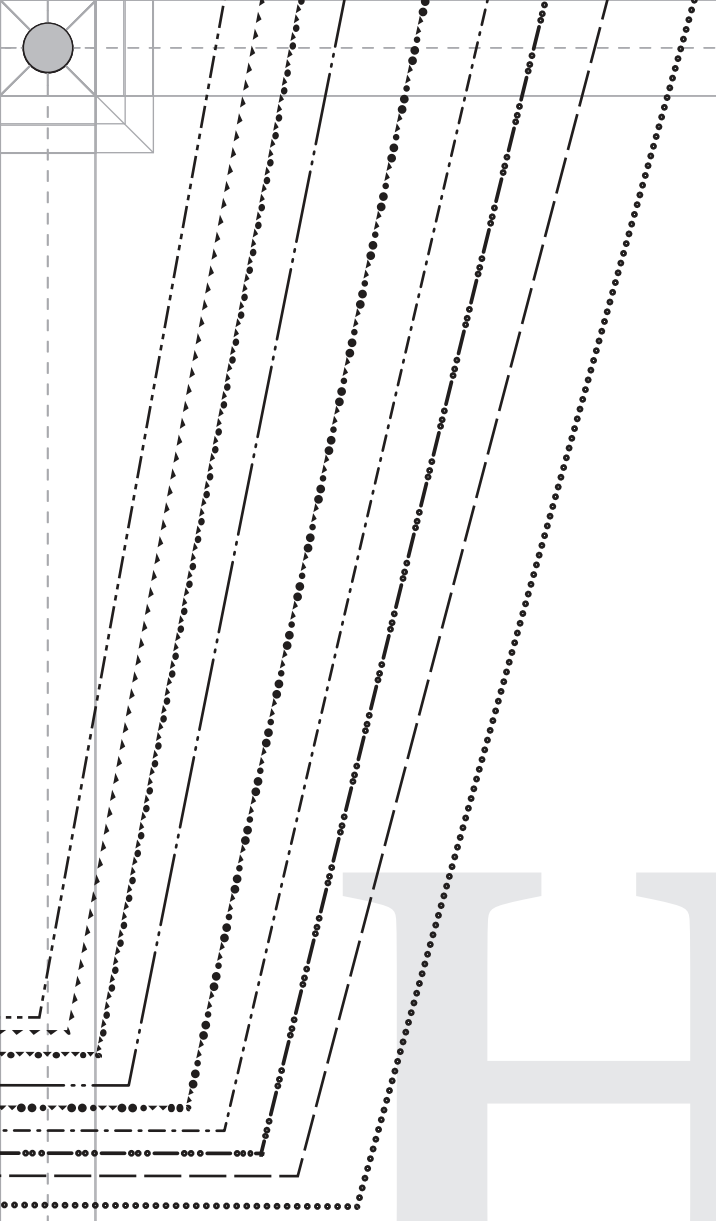

H5

11

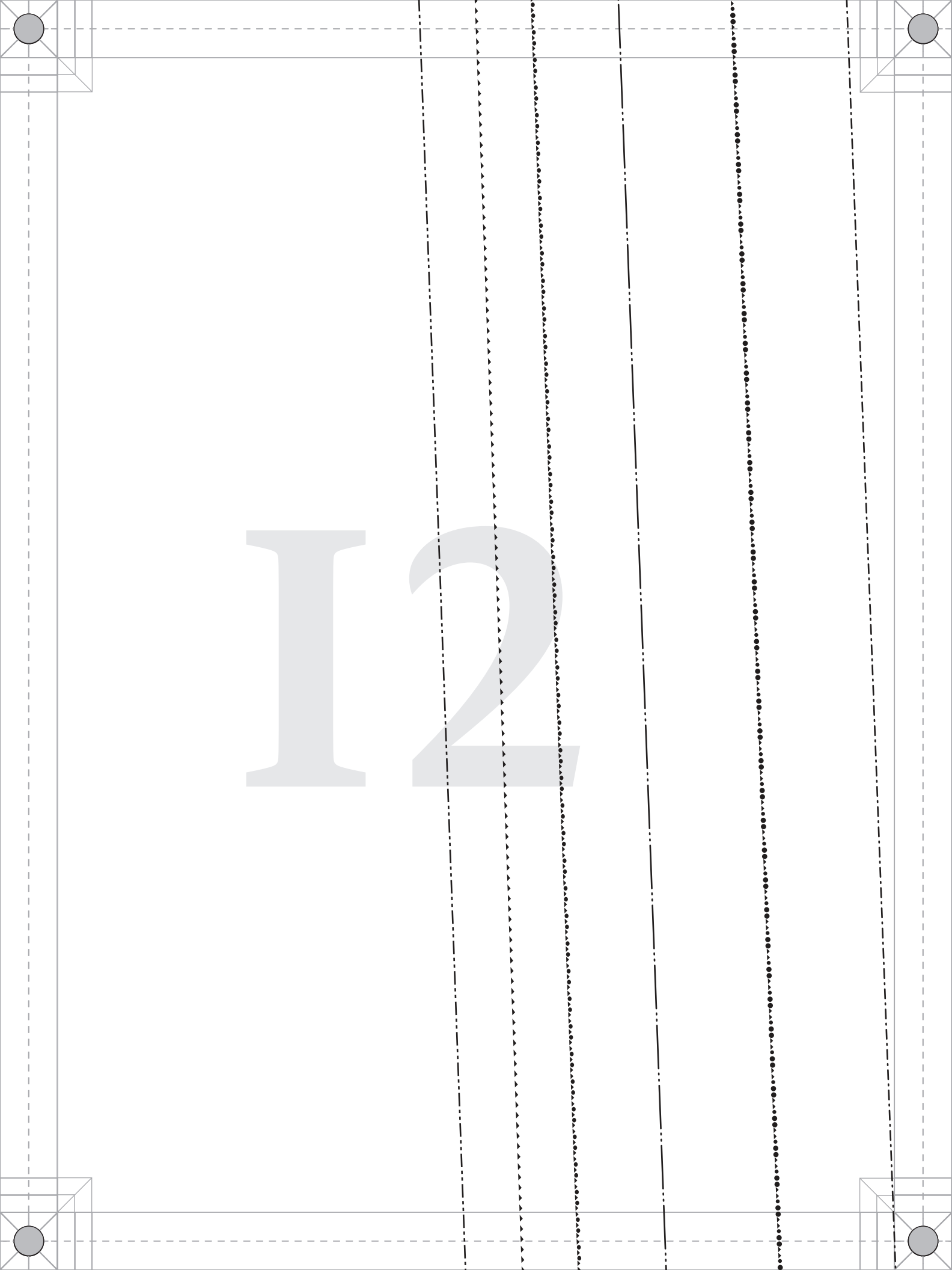

I2

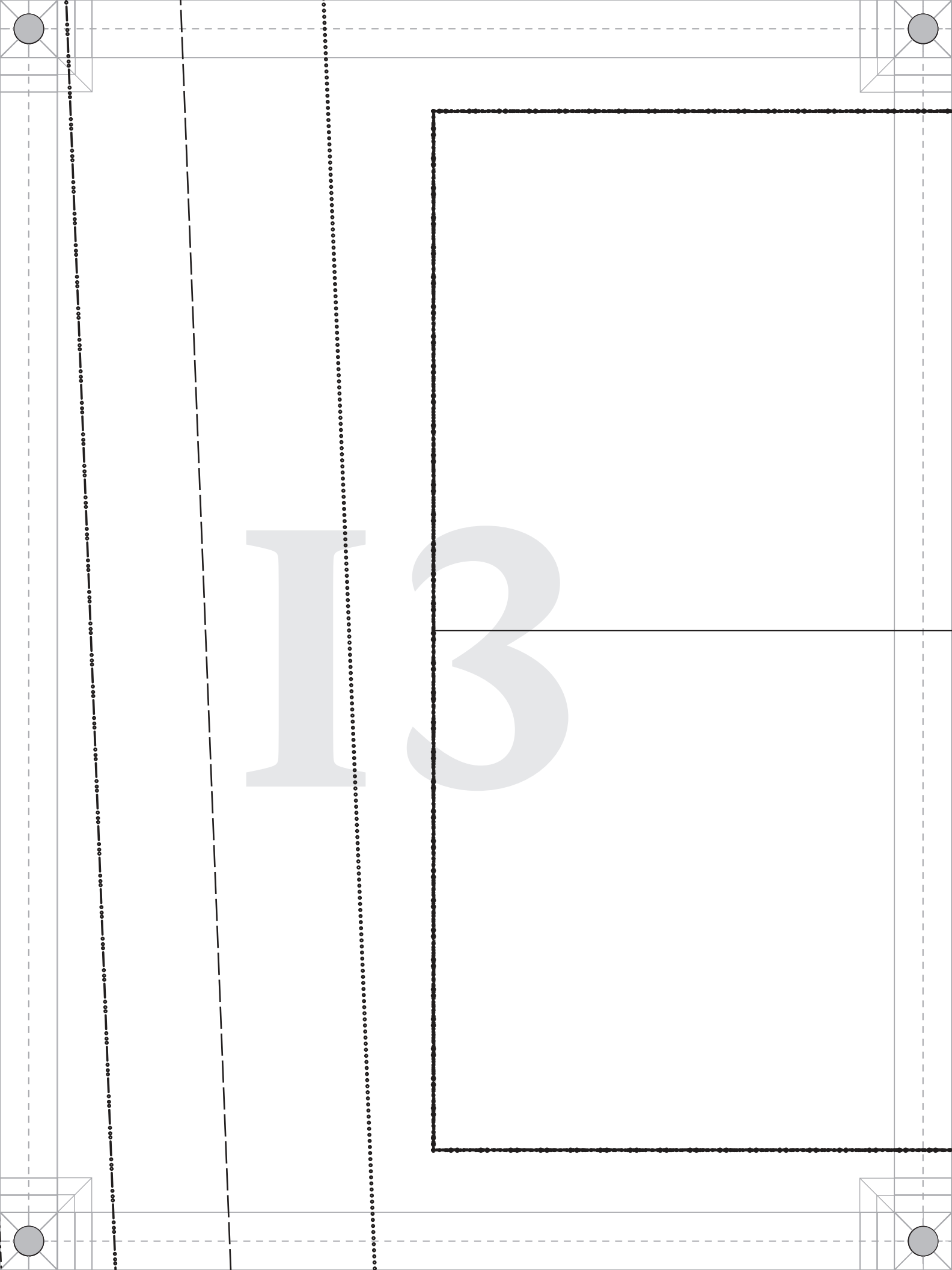
13

PATTERNS BY mood DESIGNER FABRICS MDF458

#MoodNobHillPattern

"The Nob Hill Draped Midi Dress" MDF458

14

E - COLLAR

Cut 1

Ladies Sizes XS to 5XL

1/2" seam allowances (SA's) included



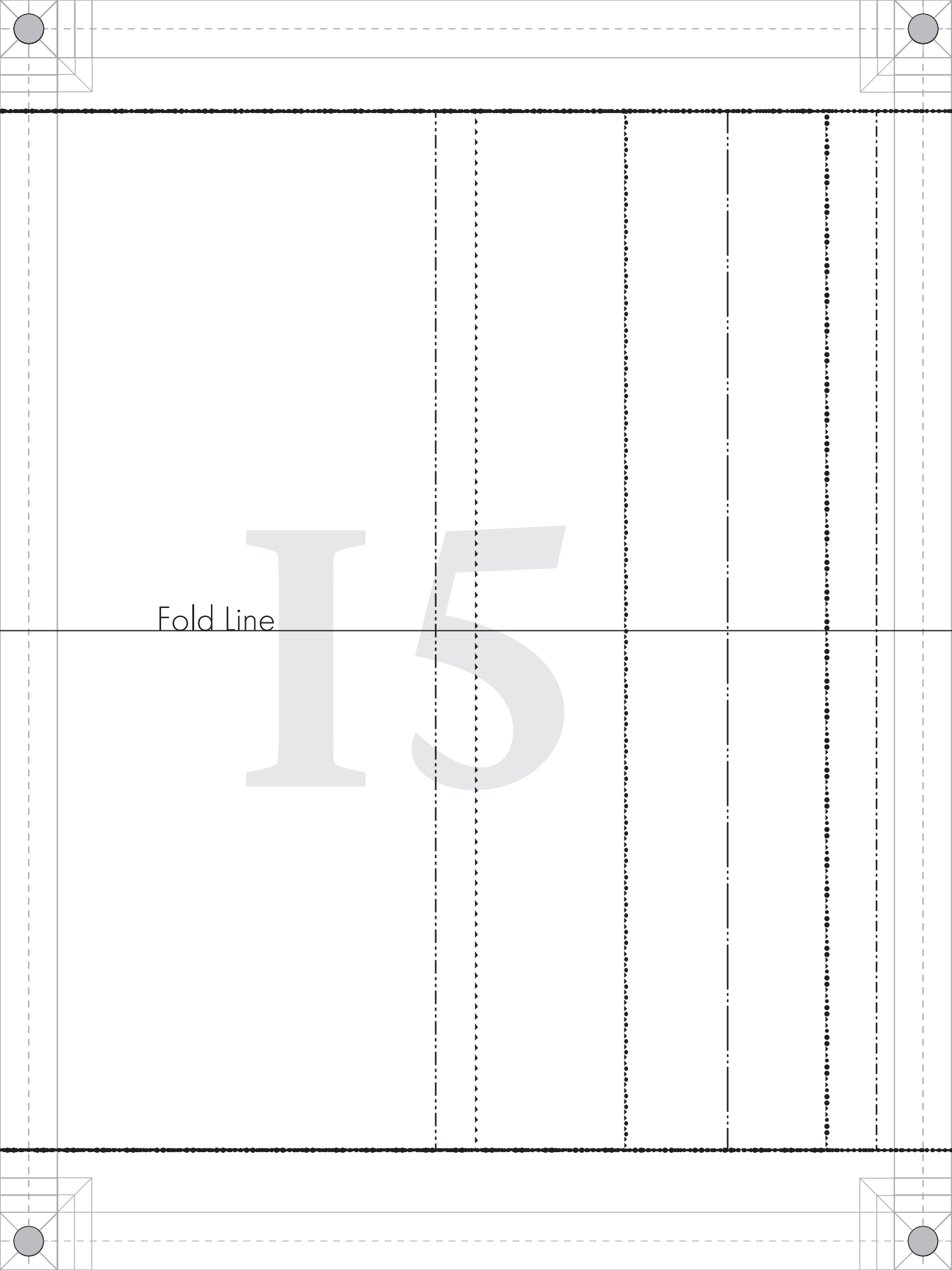
Fold Line
15

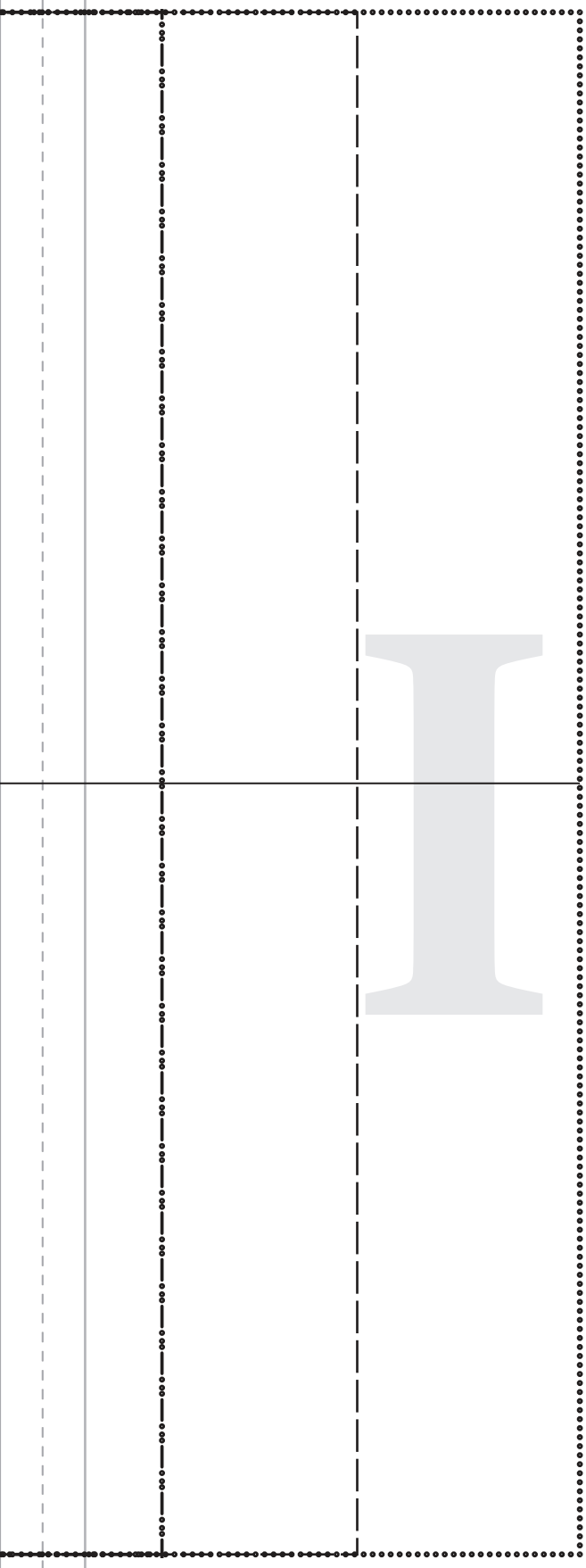

16

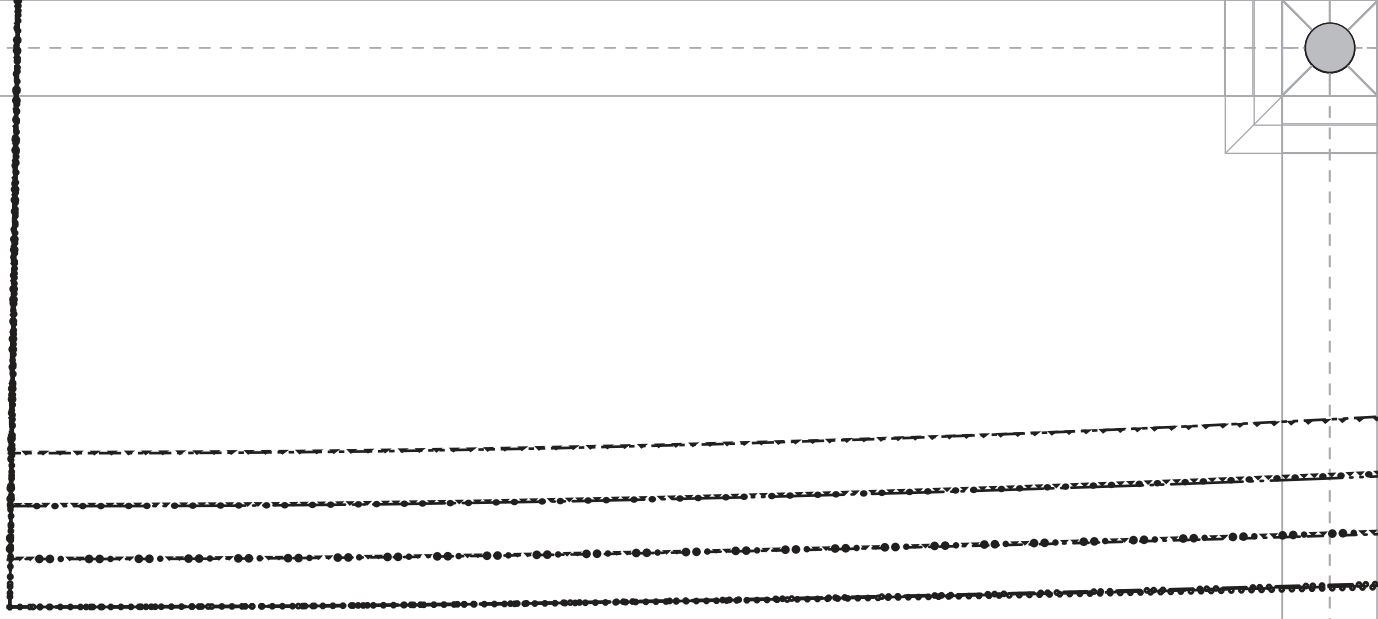

J1

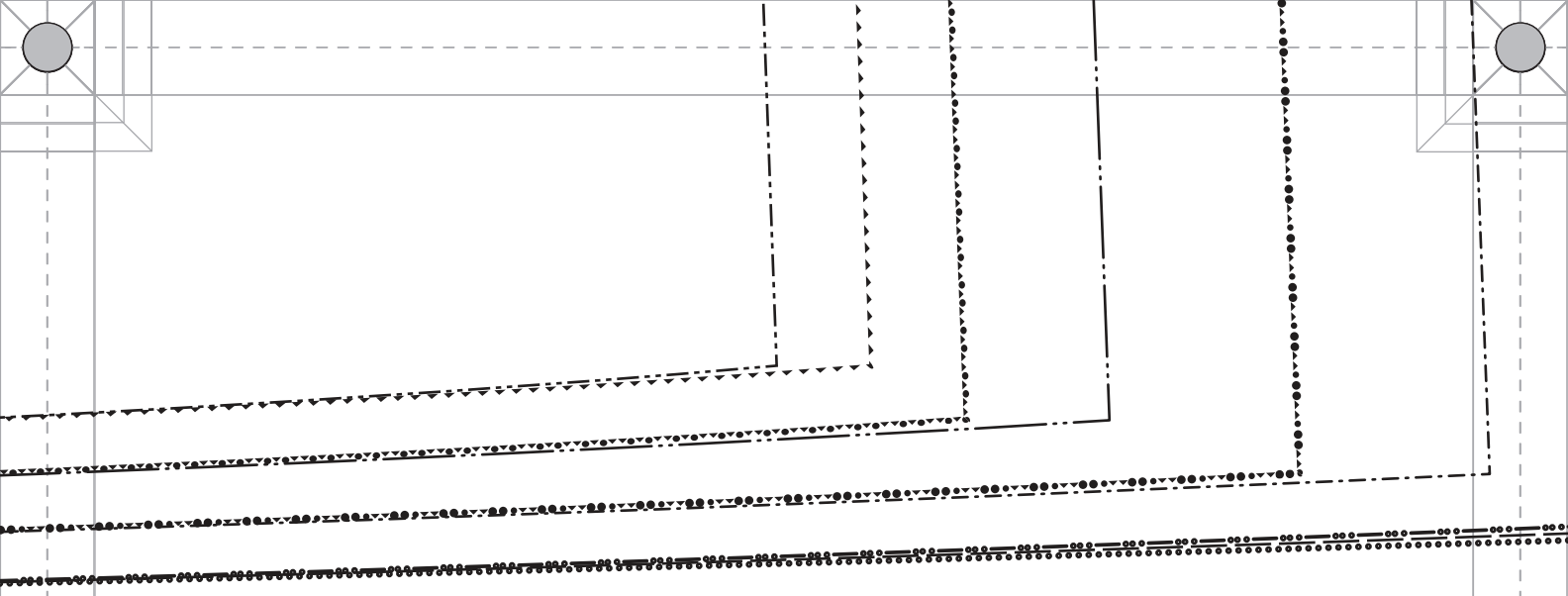

J2

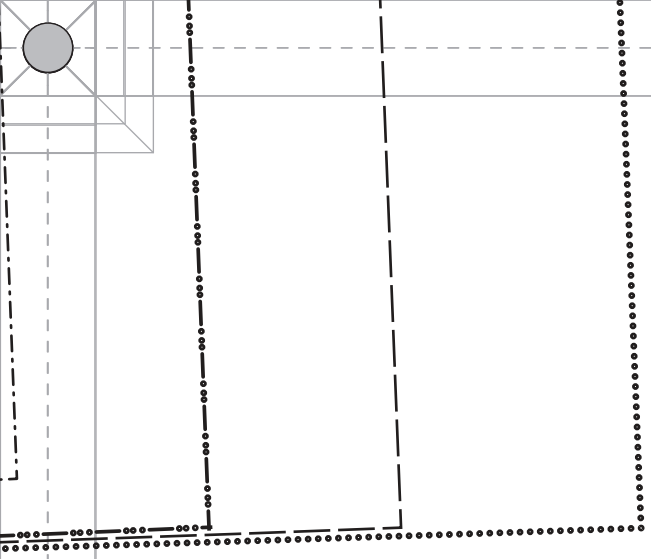

J3