PATTERNS BY mood FABRICS

MDF563

#MoodCortinaPattern

"The Cortina Scarf-Collar Coat"



STOP!

Print only this page first to check accuracy. The Mood square above should measure 2 inches. Print "actual size" in "portrait" mode (not auto center). Formatted for both US Letter & A4 paper sizes.

Formatted for both US Letter & A4 Paper

Trimless Option:
This is the fastest! No trimming needed! Place left-side margins over right-side margins, overlapping dashed lines and dots. In the same fashion, top margins will overlap bottom margins. Slight unprinted gaps are normal for this method.

Trimmed Option:
This removes any unprinted gaps. Trim along the top and right margins at the dashed lines. Overlap the trimmed margins to the untrimmed margins, matching dashed lines and dots.

Tip! Build rows first, then join the rows together as you go.

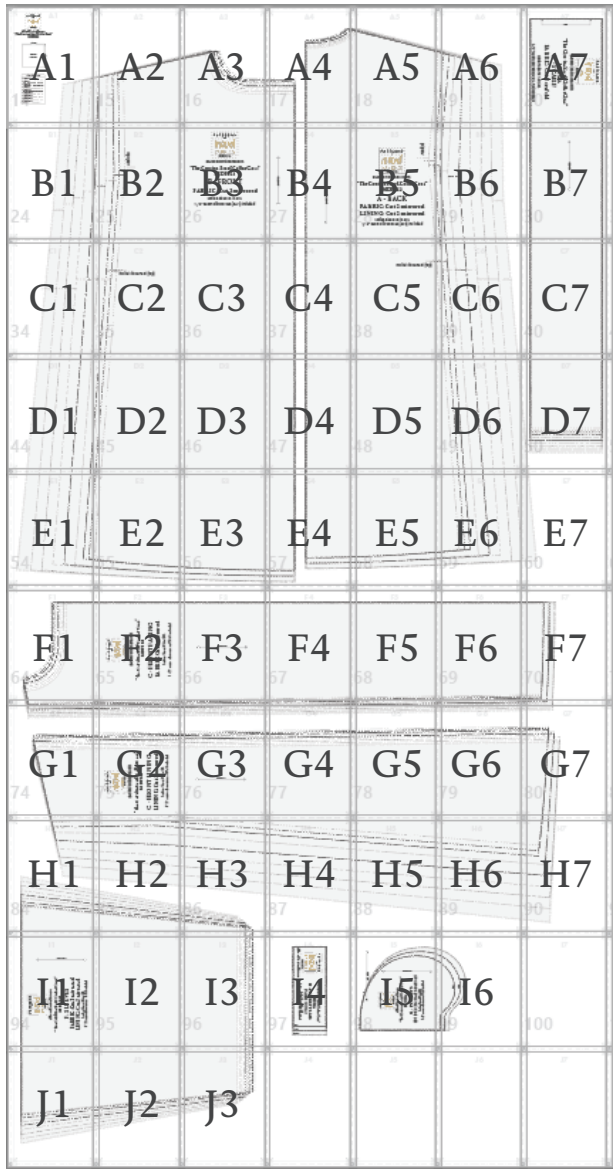

©2026 MoodFabrics.com / MoodSewciety.com
Mass production, resale, or distribution of this pattern in any form is strictly prohibited.

mood SEWCIETY

PATTERNS BY mood FABRICS MDF563

#MoodCortinaPattern

MDF563 - "The Cortina Scarf-Collar Coat"

Ladies Sizes XS to 5XL

BODY MEASUREMENTS IN INCHES (Chart 1)

SIZE	XS	S	M	L	XL	2XL	3XL	4XL	5XL
BUST	31- 32	33 - 34	35 - 36	37 - 39	40 - 43	44 - 47	48 - 51	52 - 55	56 - 60
WAIST	23 - 24	25 - 26	27 - 28	29 - 31	32 - 35	36 - 39	40 - 43	44 - 47	48 - 52
HIPS	34 - 35	36 - 37	38 - 39	40 - 42	43 - 46	47 - 50	51 - 54	55 - 58	59 - 63

APPROXIMATE FINISHED GARMENT MEASUREMENTS - IN INCHES (Chart 2)

SIZE	XS	S	M	L	XL	2XL	3XL	4XL	5XL
BUST	42	44	46	49	53	57	61	65	70
WAIST	44	46	48	51	55	59	63	67	72
HIPS	46	48	50	53	57	61	65	69	74

*Size guide is based on the suggested design & wearing ease for this style. You can also choose the size according to your desired finished garment measurements, blending between sizes as needed. Measure the printed patterns to make sure the dimensions are according to the desired fitting and adjust if needed before cutting the fabric. For best results sew a test garment in a similar fabric to adjust your pattern.

Recommended Fabric: Main Fabric: Wool and Cashmere Coating Made in Italy - Chocolate - Alberini Collection
Lining: Bemberg Lining - Chocolate Brown - Lucidum Collection

We love creating these free patterns for the community and we want to keep them free! In return, we hope you check out MoodFabrics.com for your next project!

Want to use one of our patterns to make a garment to sell? Our patterns are royalty-free! We just ask that you credit us with:
MoodSewciety.com
or
MoodFabrics.com
in your product description.

FOR SEWING INSTRUCTIONS AND MORE INFORMATION:
Scan the QR code or visit MoodSewciety.com and search "MDF563"

1/2" seam allowances (SA's) included unless stated otherwise.

REMEMBER TO SHARE YOUR MADE WITH MOOD LOOK!

Tag us and use:
#MoodCortinaPattern
for a shot at being featured on our social media

@mood.fabrics
@moodfabrics
@Mood_Fabrics
@moodfabrics
@moodfabrics

©2026 MoodFabrics.com / MoodSewciety.com
Mass production, resale, or distribution of this pattern in any form is strictly prohibited.

mood SEWCIETY

♥ The Mood Sewciety Team

PATTERNS BY mood FABRICS MDF563

"The Cortina Scarf-Collar Coat"

PATTERN PIECES

A	**BACK** FABRIC - CUT 2 MIRRORED LINING - CUT 2 MIRRORED
B	**FRONT** FABRIC - CUT 2 MIRRORED
C	**FRONT LINING** LINING - CUT 2 MIRRORED
D	**FRONT FACING** FABRIC - CUT 2 MIRRORED
E	**SCARF** FABRIC - CUT 2 ON FOLD
F	**SLEEVES*** FABRIC - CUT 2 MIRRORED LINING - CUT 2 MIRRORED
G	**POCKETS** LINING - CUT 2 MIRRORED SETS
H	**POCKET FLAPS** FABRIC - CUT 2

*Due to the dropped-shoulder design, the sleeve gets shorter as the size increases to compensate for the lower shoulder position. Sleeve length is based on standard measurements. **Check the back shoulder + sleeve length against the body measurement and adjust if needed.**

The coat length is drafted to mid-calf for Regular sizes. For Petite sizes, shorten the finished length by 2–3"; for Tall sizes, lengthen it by 3–4".

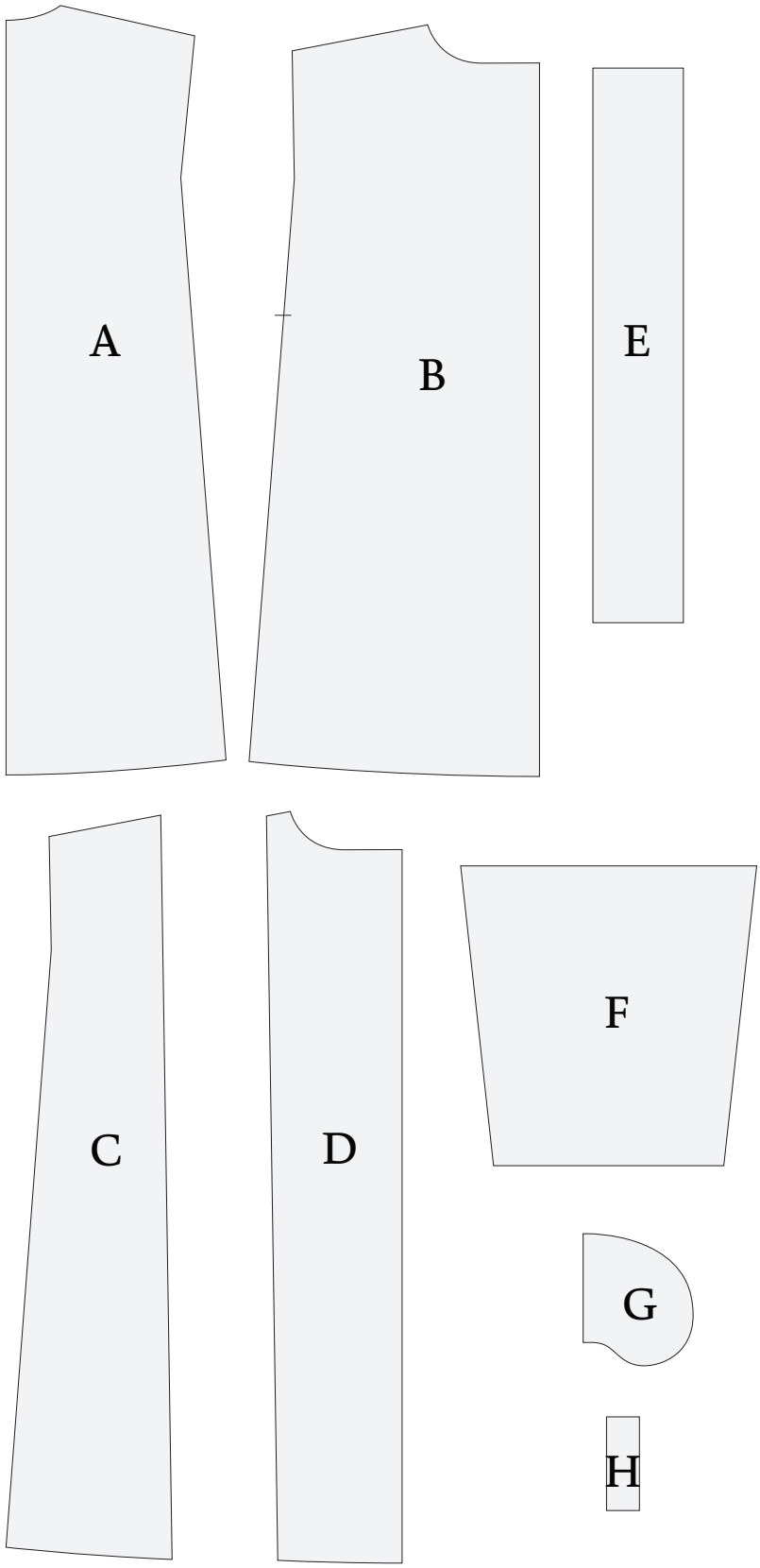

©2026 MoodFabrics.com / MoodSewciety.com
Mass production, resale, or distribution of this pattern in any form is strictly prohibited.
mood SEWCIETY

PATTERNS BY mood FABRICS MDF563

#MoodCortinaPattern

"The Cortina Scarf-Collar Coat" MDF563

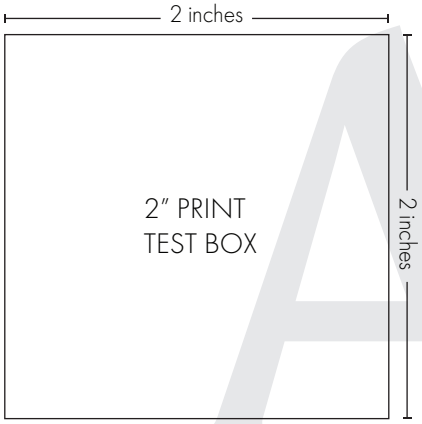

A1

Size Line Key
SIZE XS
SIZE S
SIZE M
SIZE L
SIZE XL
SIZE 2XL
SIZE 3XL
SIZE 4XL
SIZE 5XL

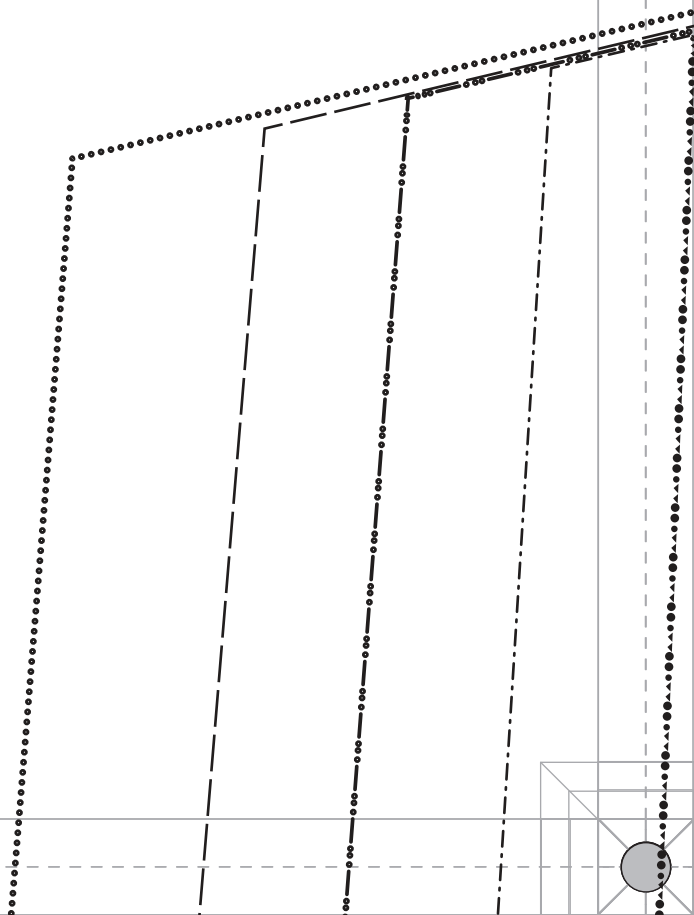

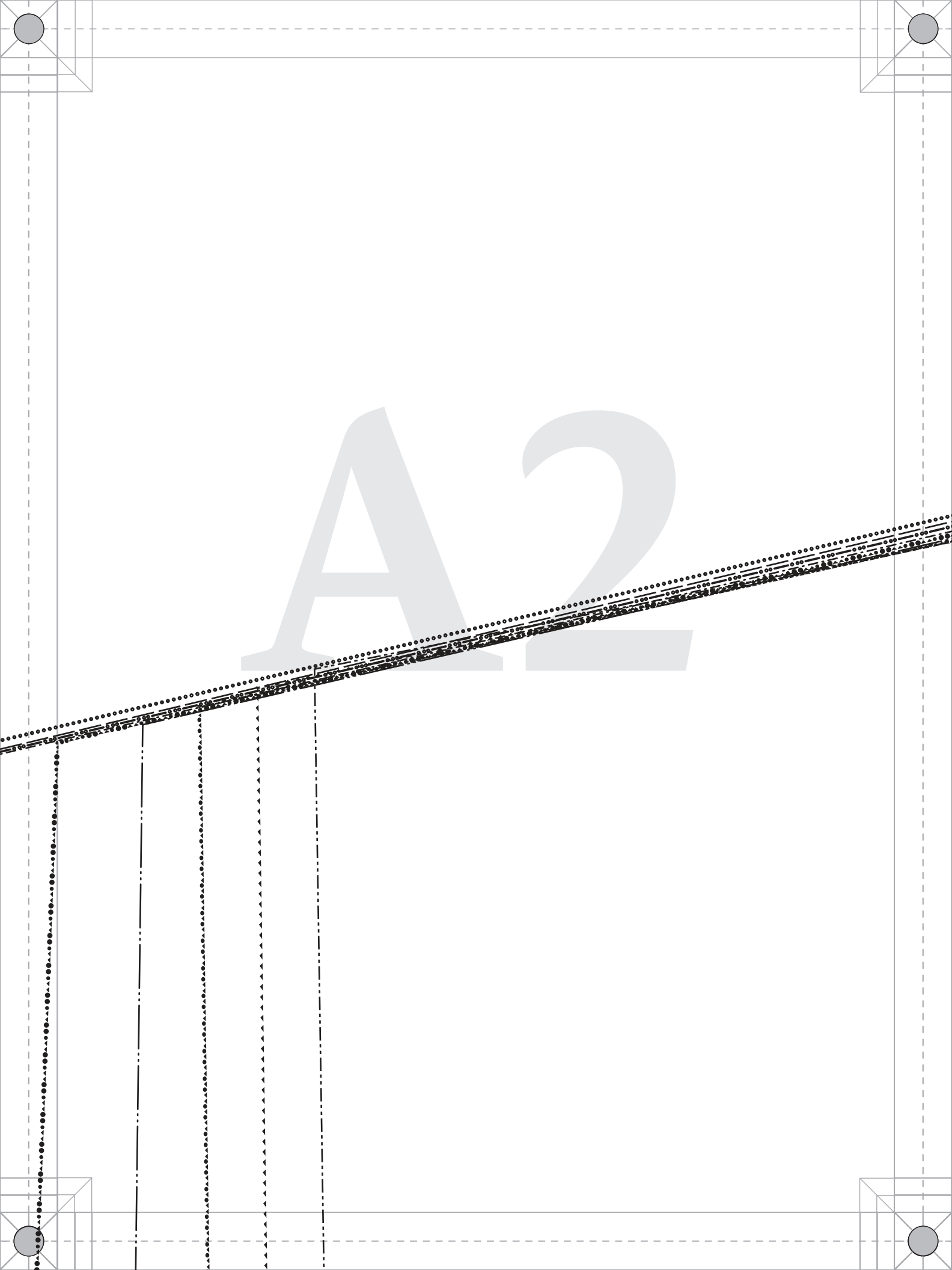
A2

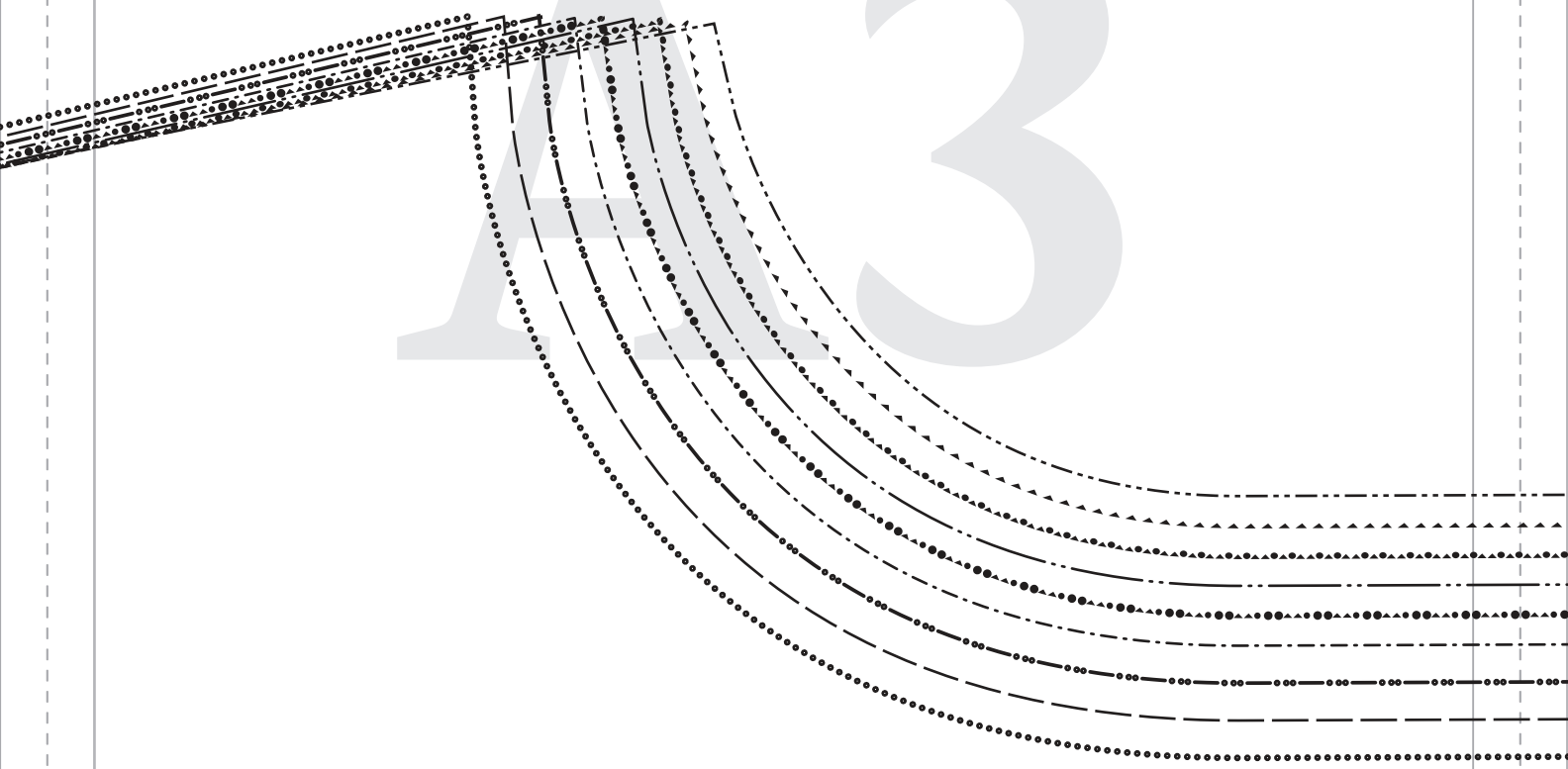

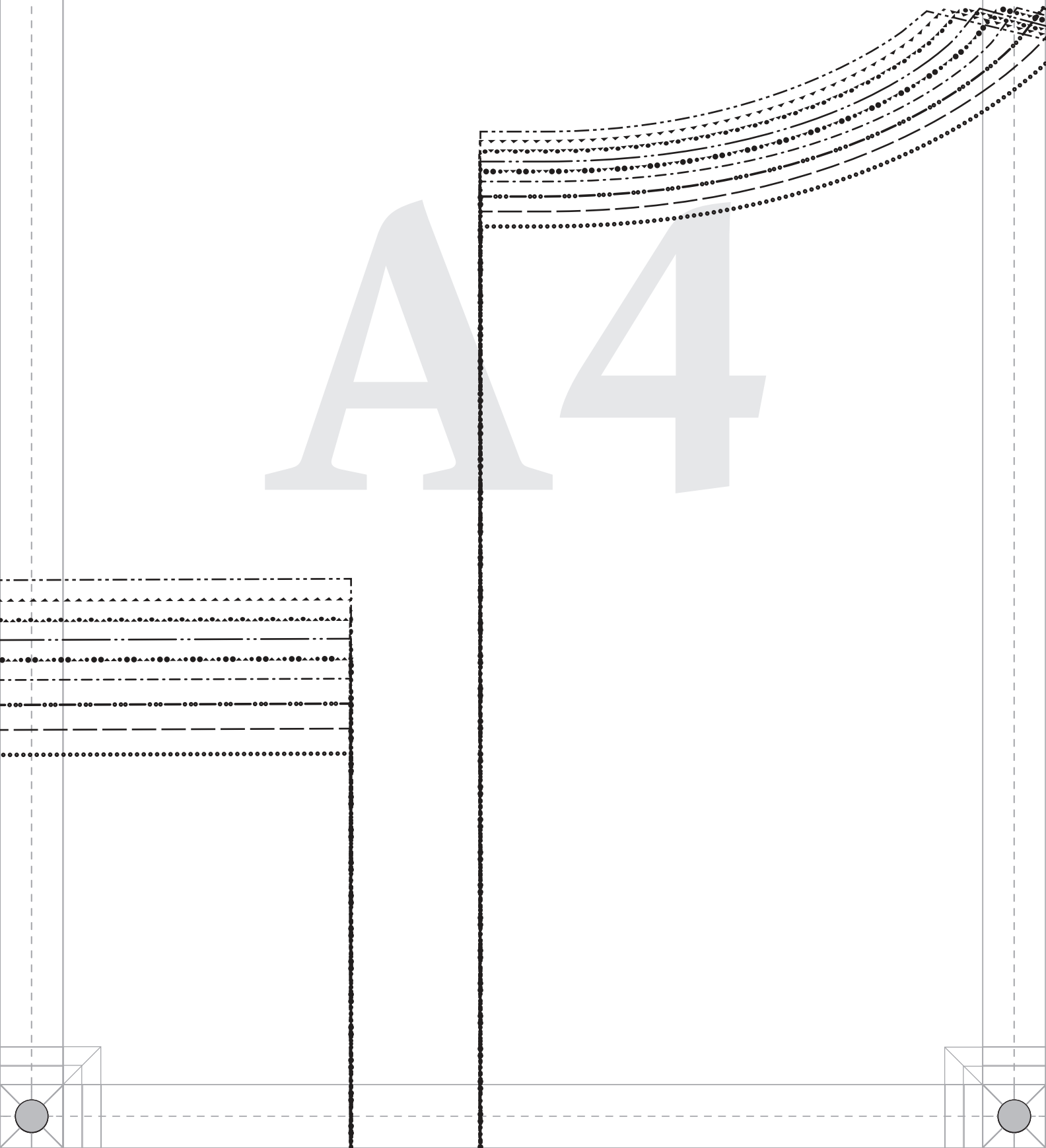
A4

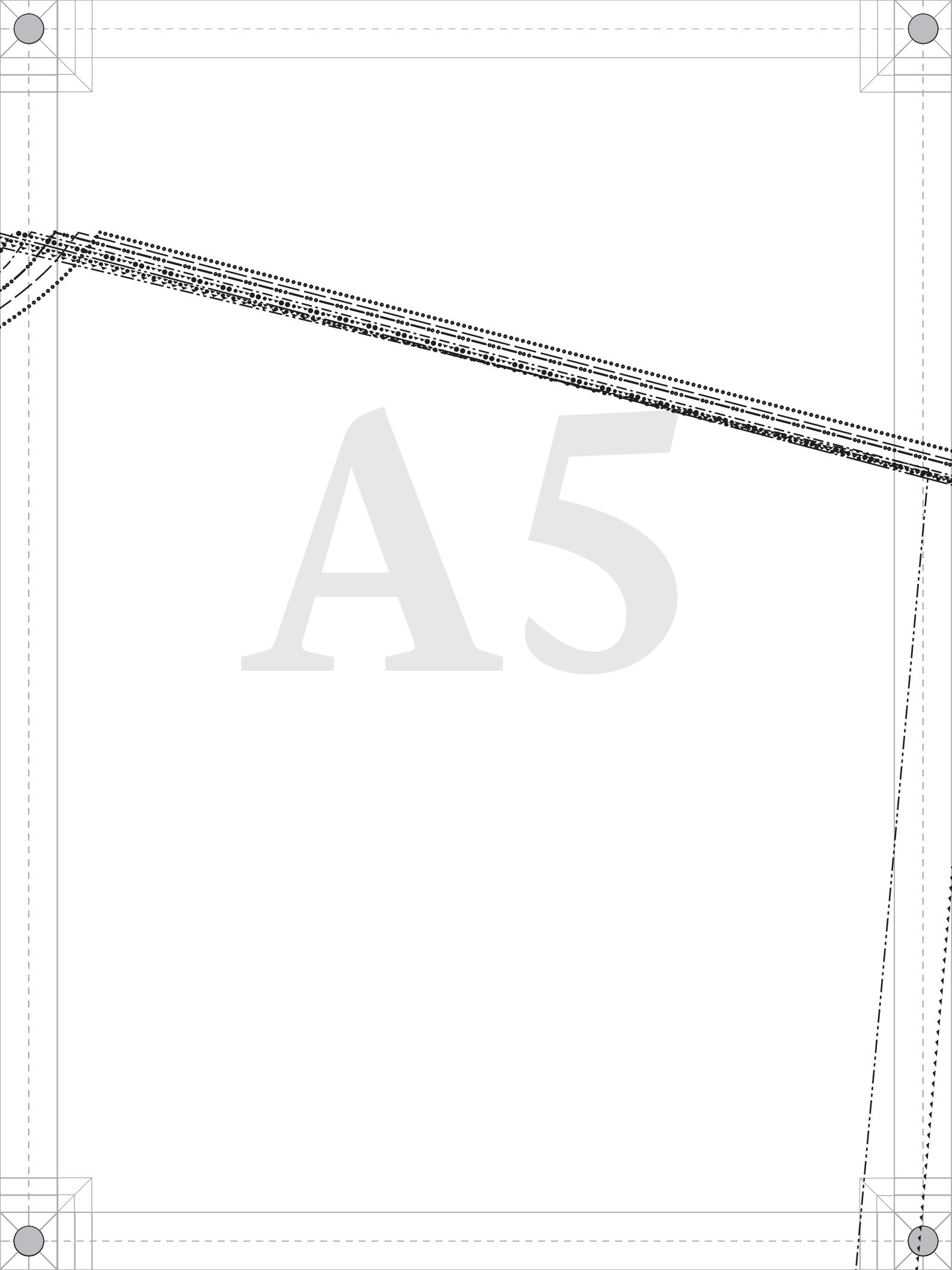
A5

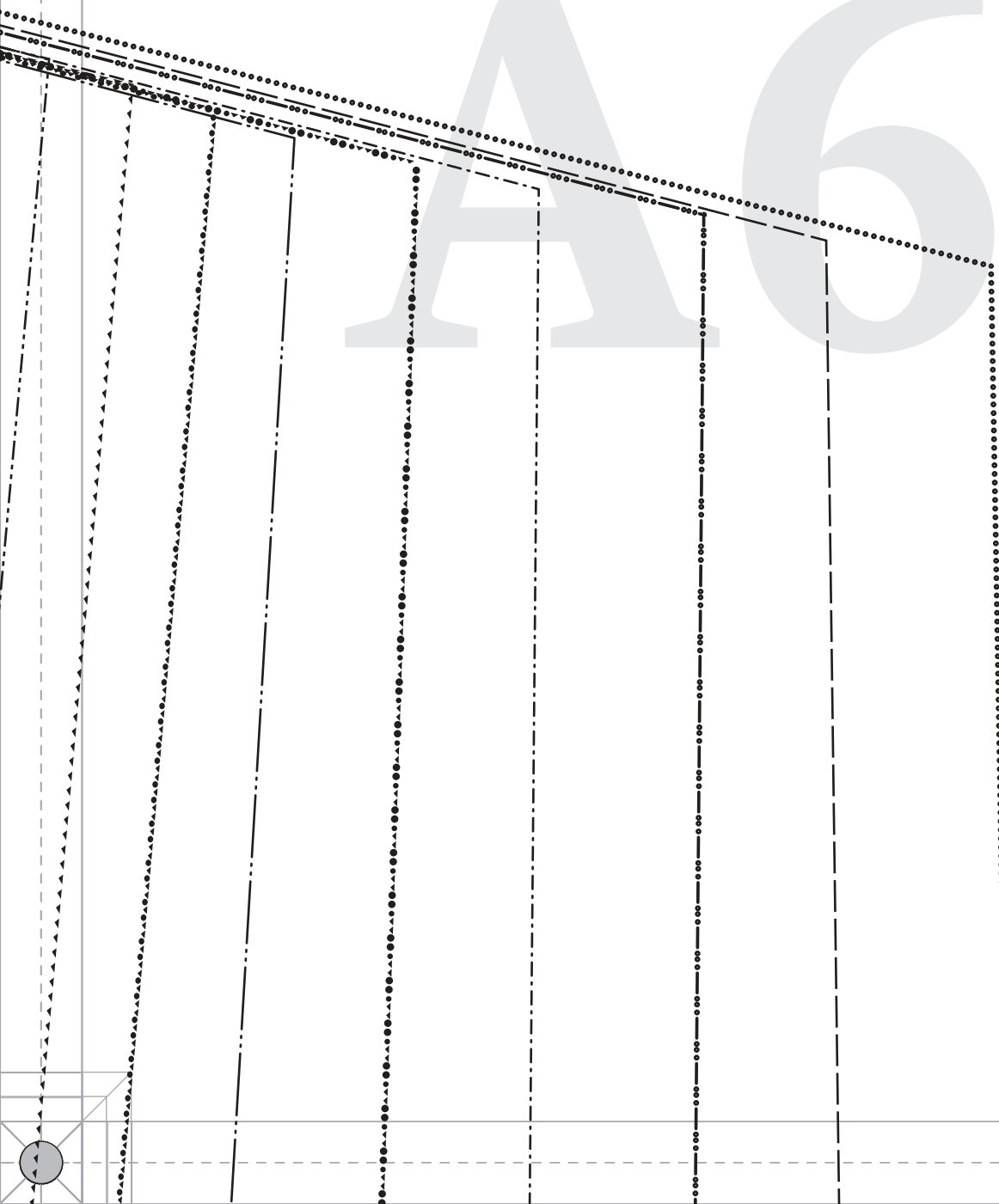
A6

PATTERNS BY mood FABRICS MDF563

#MoodCortinaPattern

"The Cortina Scarf-Collar Coat"

MDF563

E - SCARF

FABRIC: Cut 2 on fold

FOLD

Ladies Sizes XS to 5XL

1/2" seam allowances (SA's) included

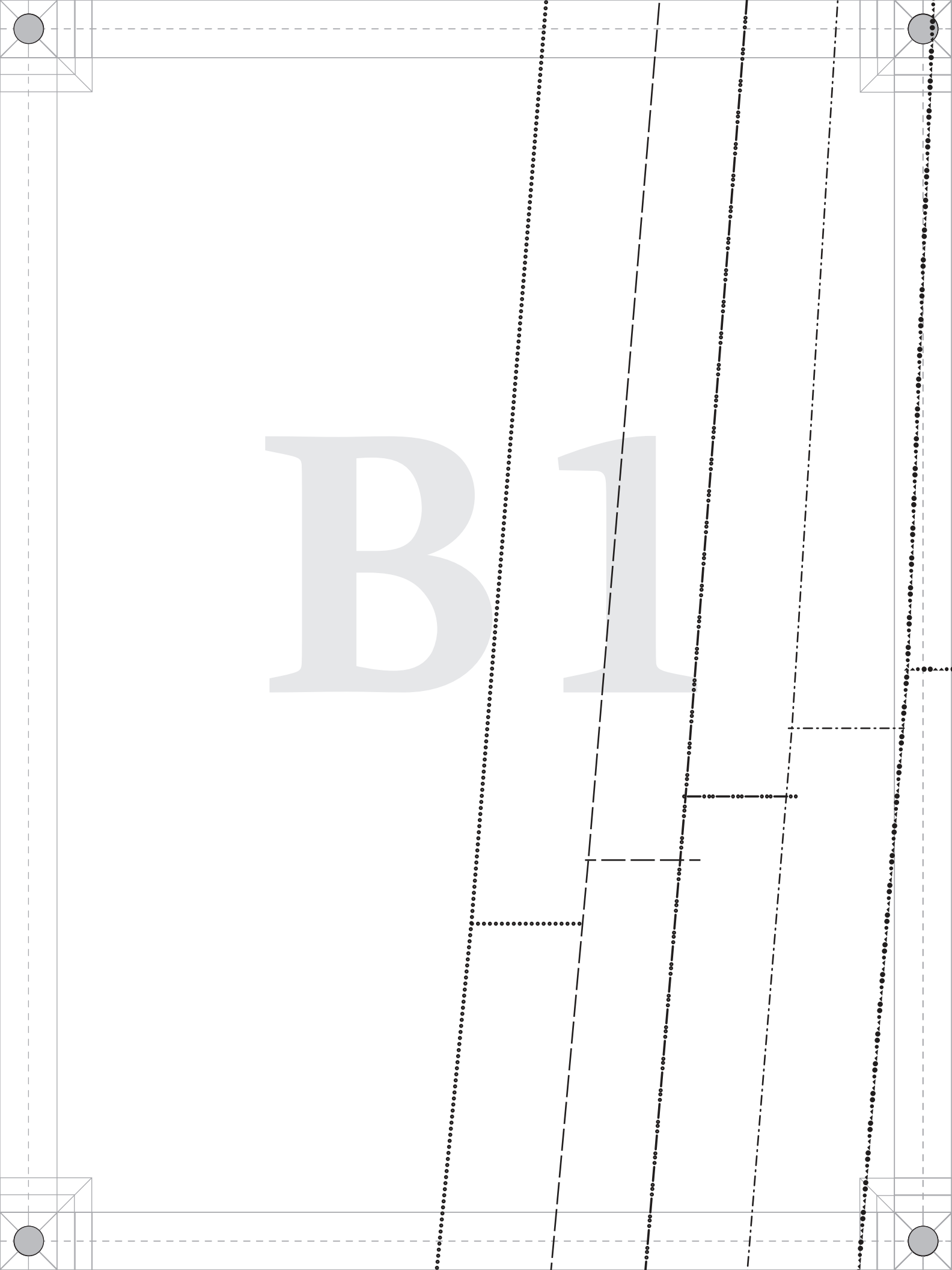
B1

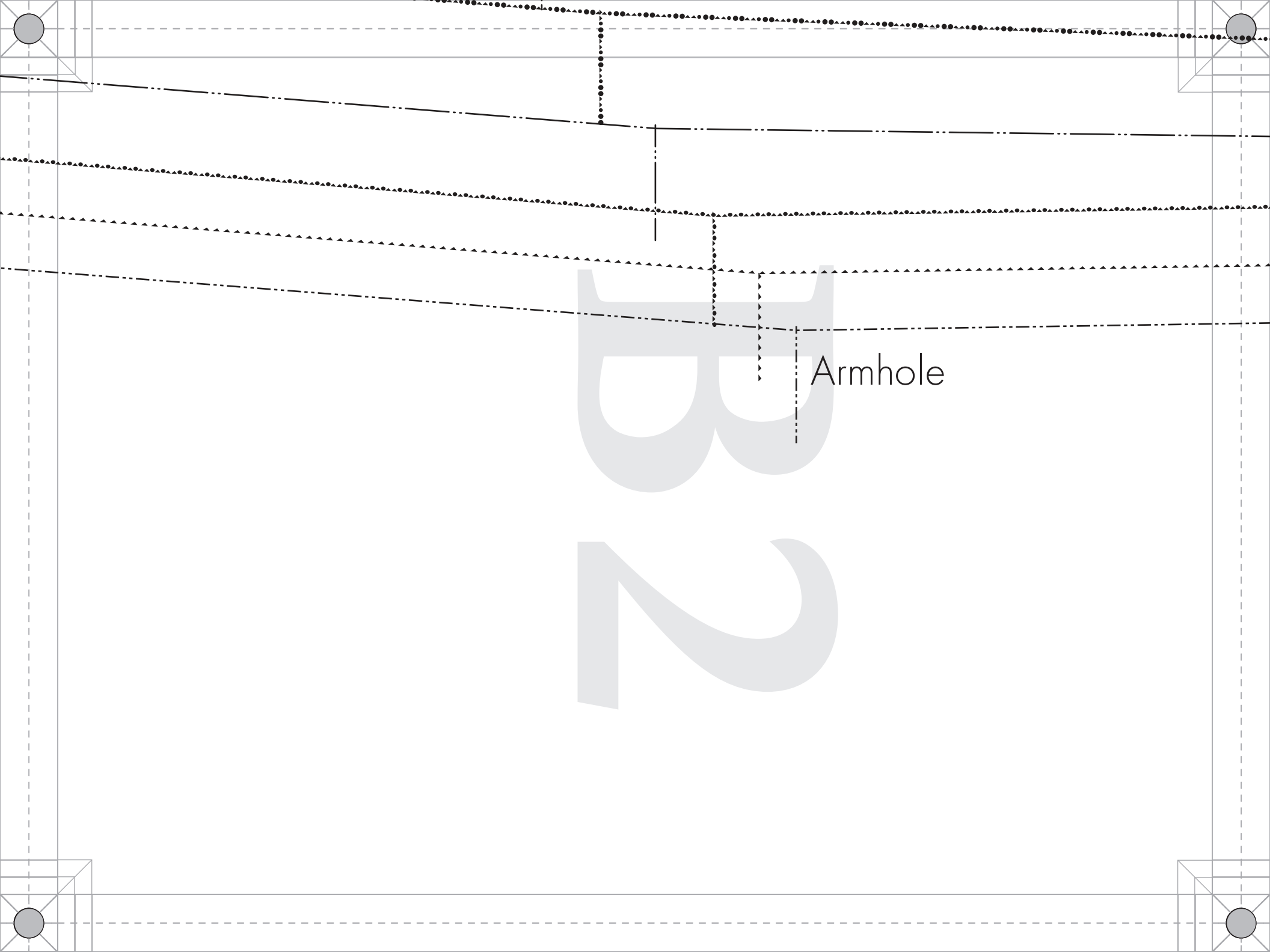
Armhole

PATTERNS BY mood FABRICS MDF563

#MoodCortinaPattern

"The Cortina Scarf-Collar Coat" MDF563

B - FRONT

FABRIC: Cut 2 mirrored

Ladies Sizes XS to 5XL

1/2" seam allowances (SA's) included

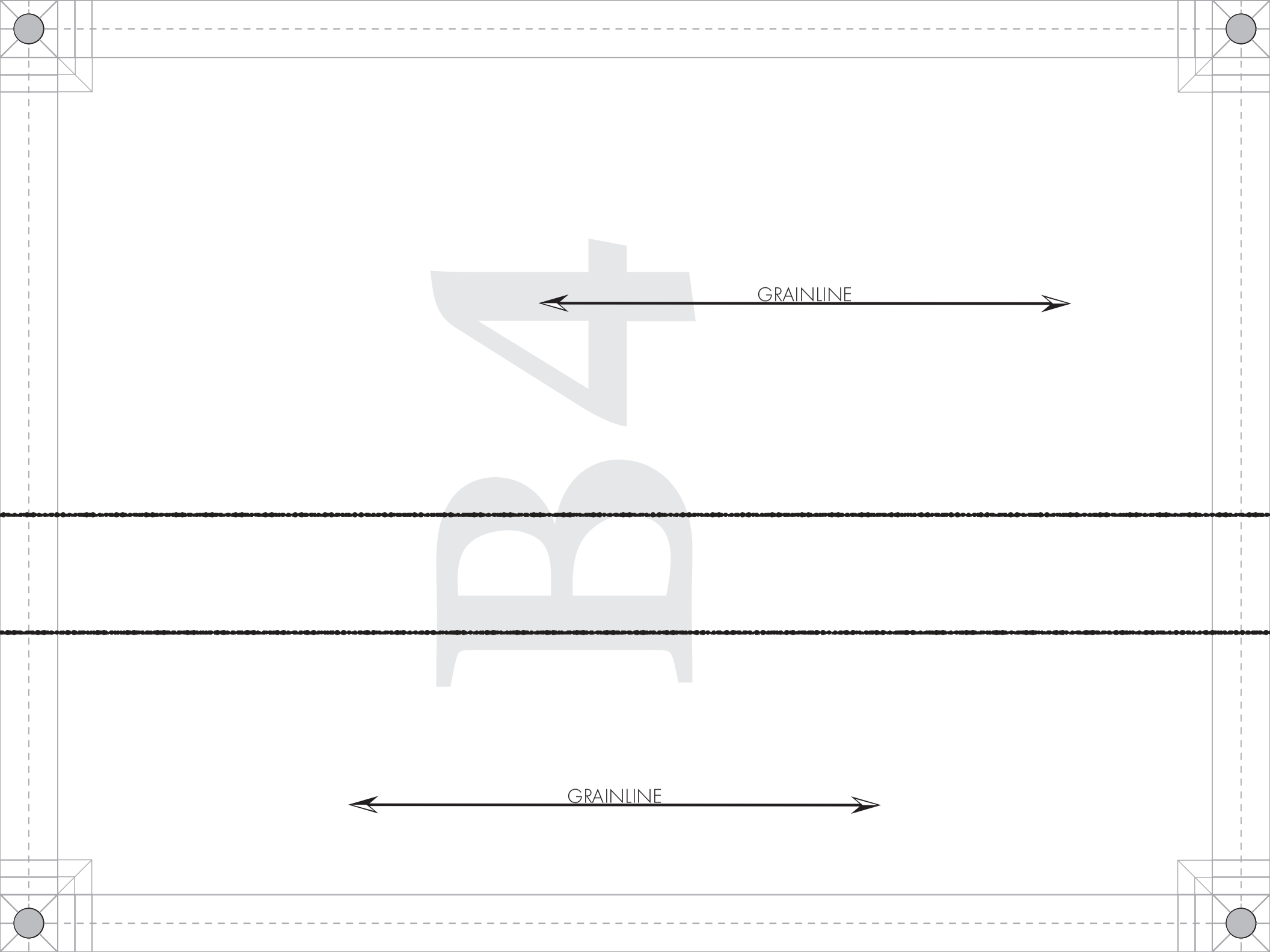
GRAINLINE
B4
GRAINLINE

PATTERNS
BY
mood
FABRICS
MDF563

#MoodCortinaPattern

"The Cortina Scarf-Collar Coat"
MDF563

A - BACK

FABRIC: Cut 2 mirrored
LINING: Cut 2 mirrored

Ladies Sizes XS to 5XL
1/2" seam allowances (SA's) included



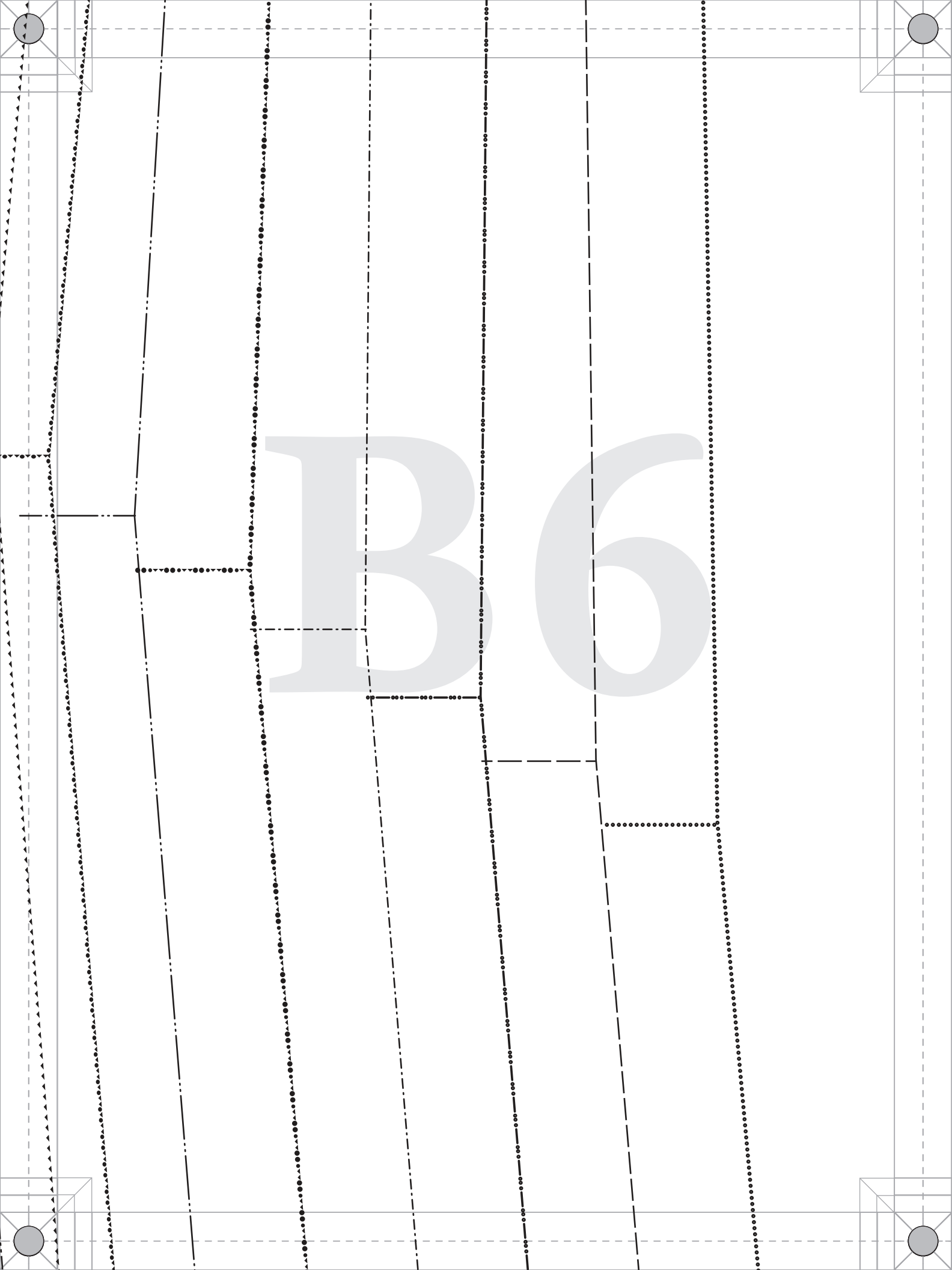
B6



B7

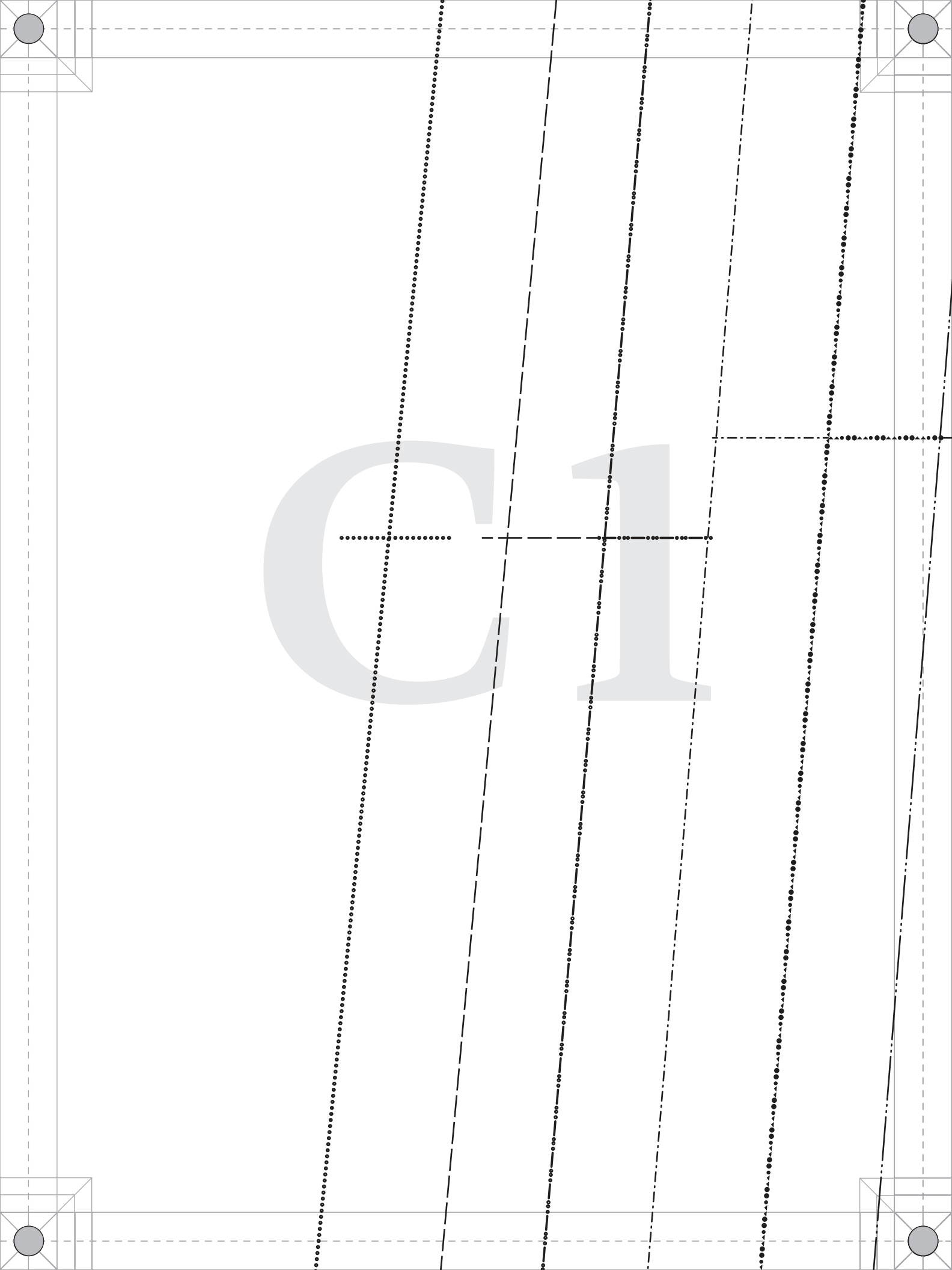
C1

Pocket Placement (Top)

C2

C3

C4

Pocket Placement (Top)

C5

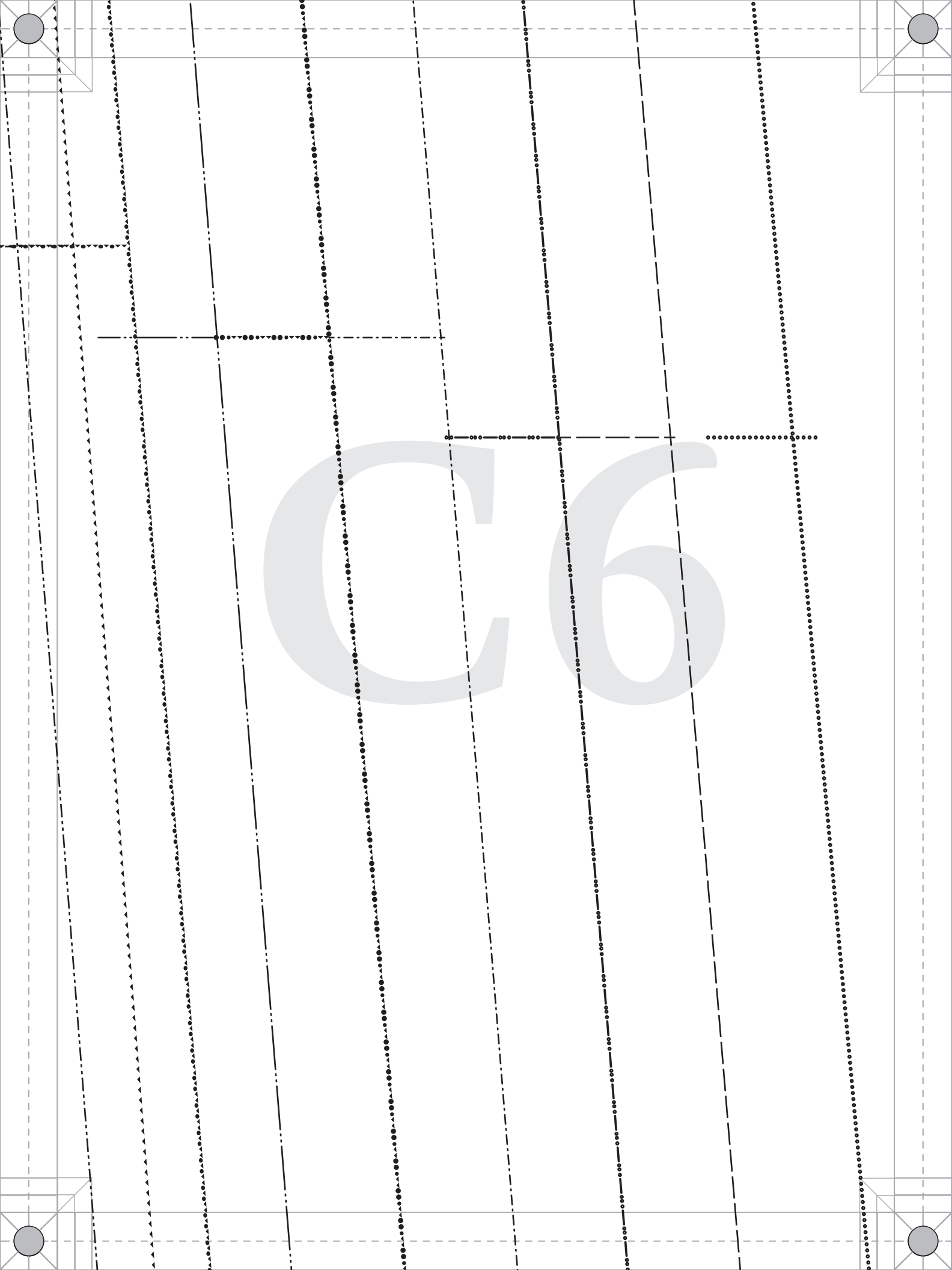
C6

C7

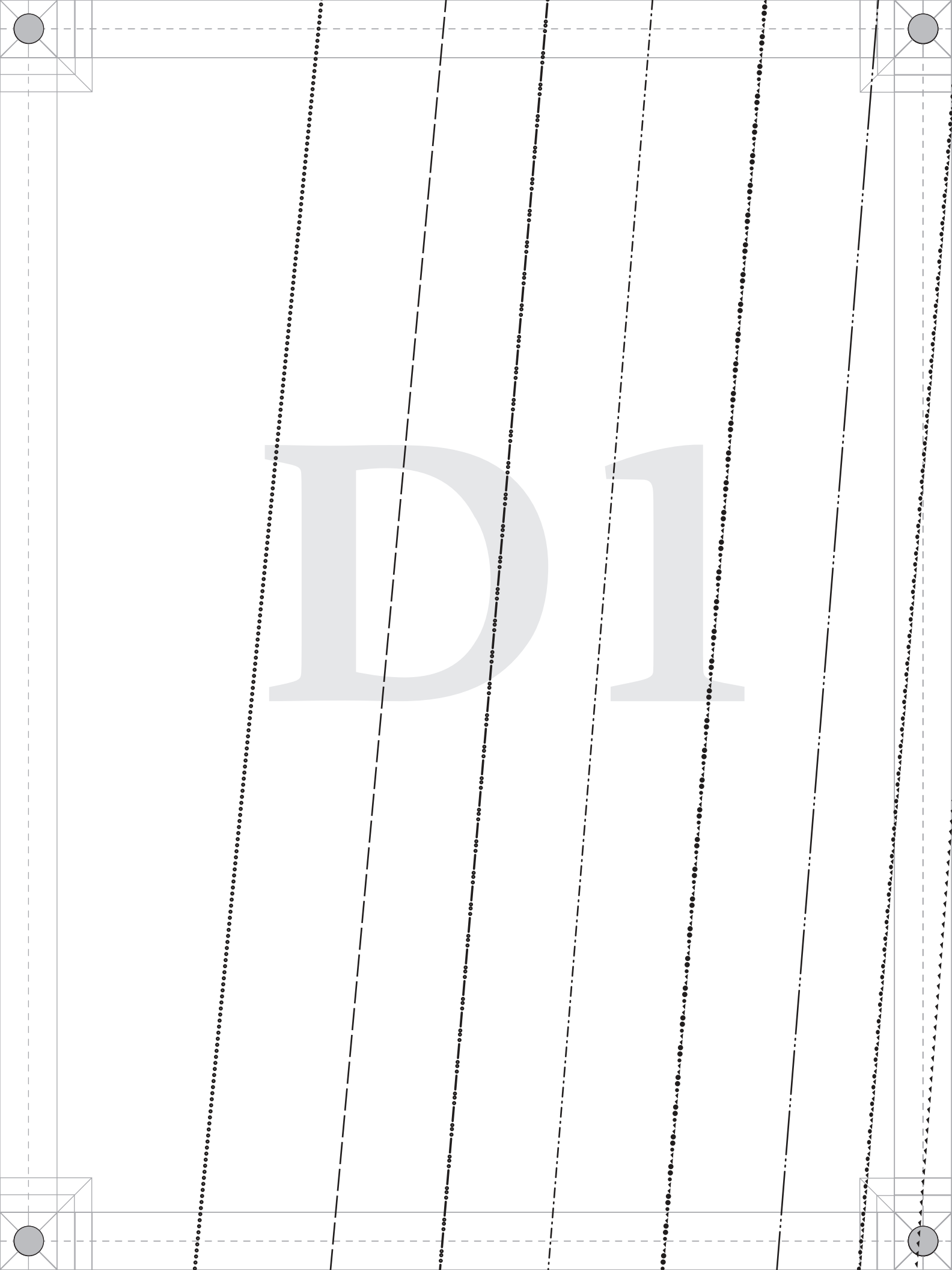
D1


D2

D3

D4

D5

D6

D7

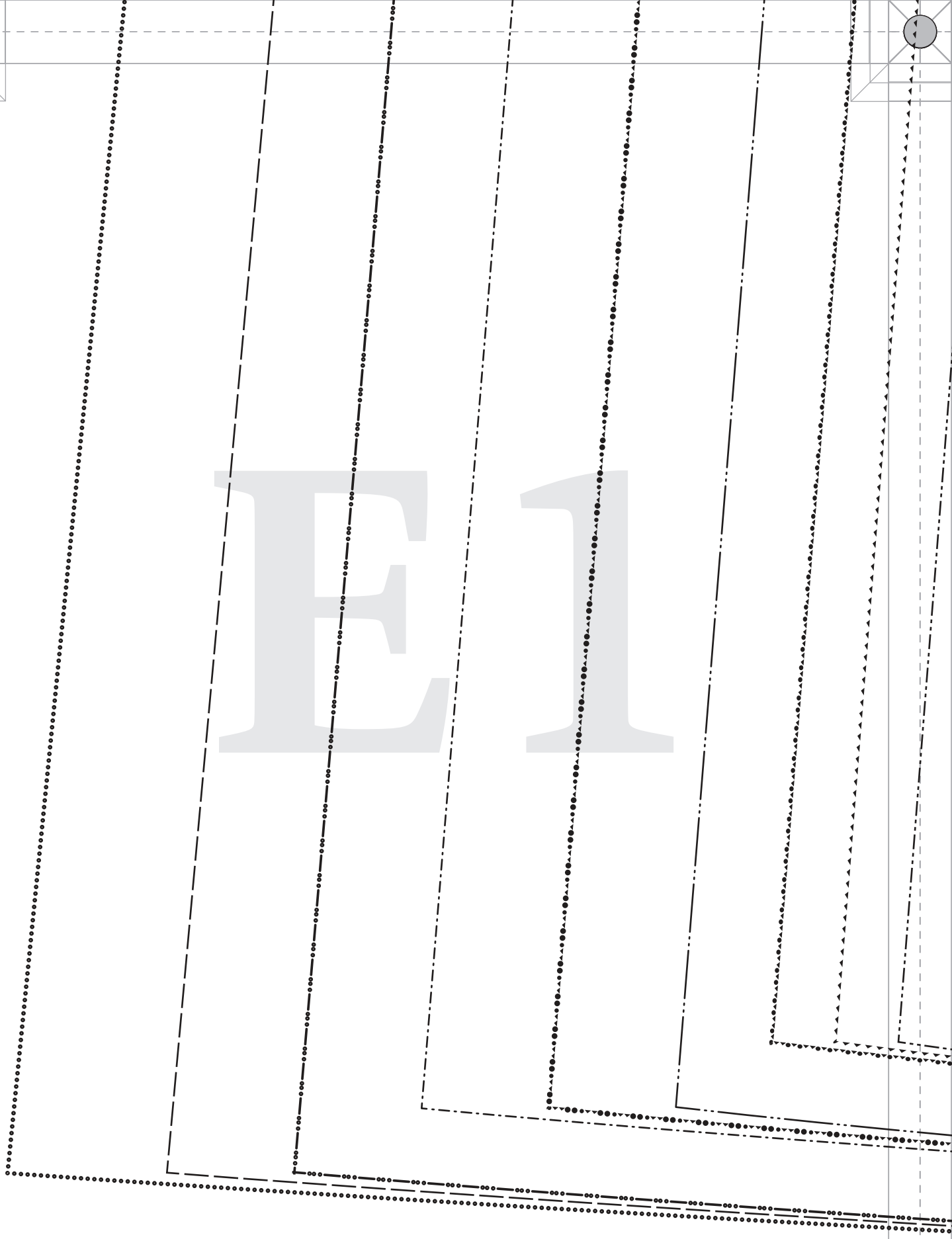
E1

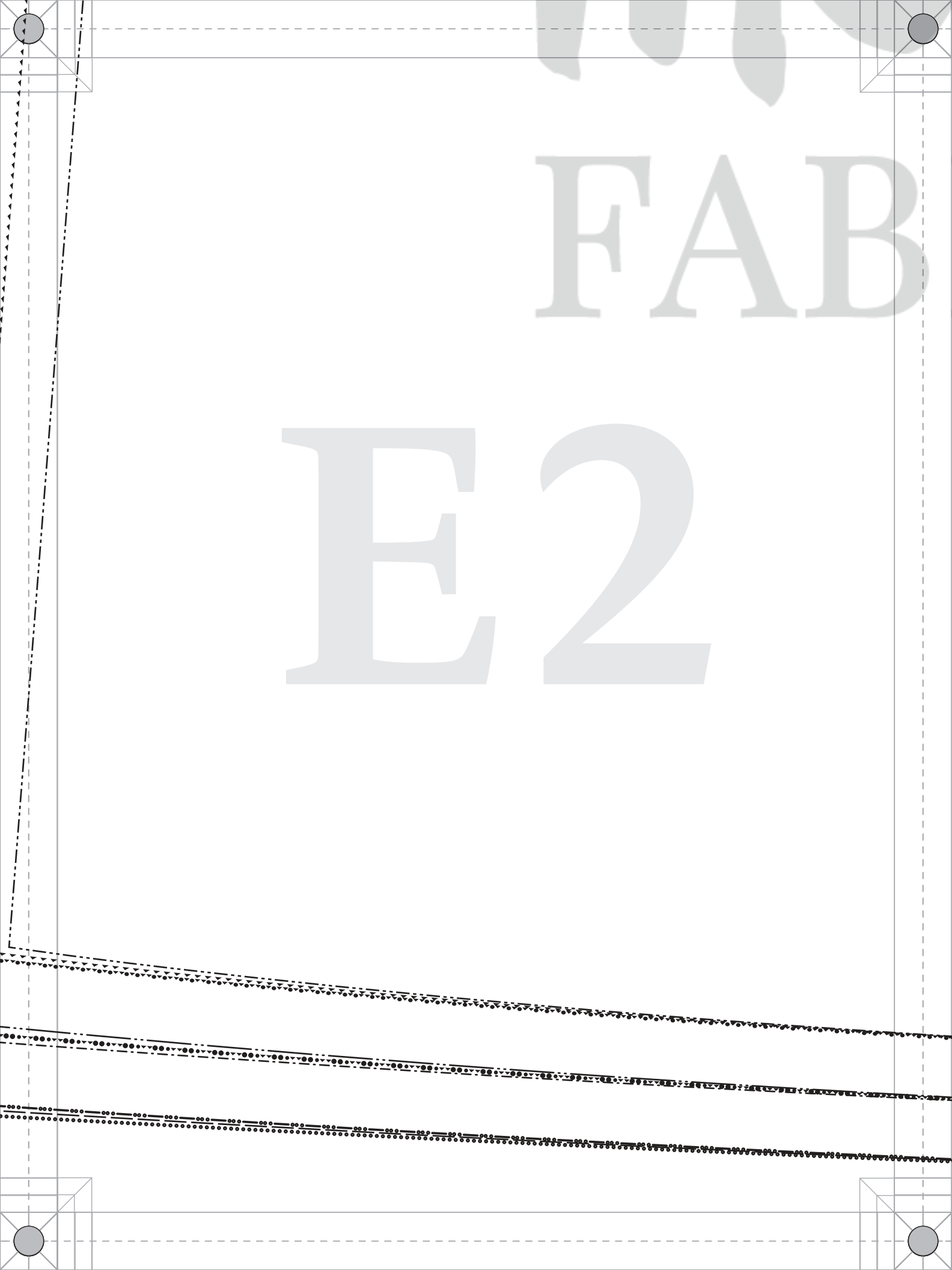
FAB
E2

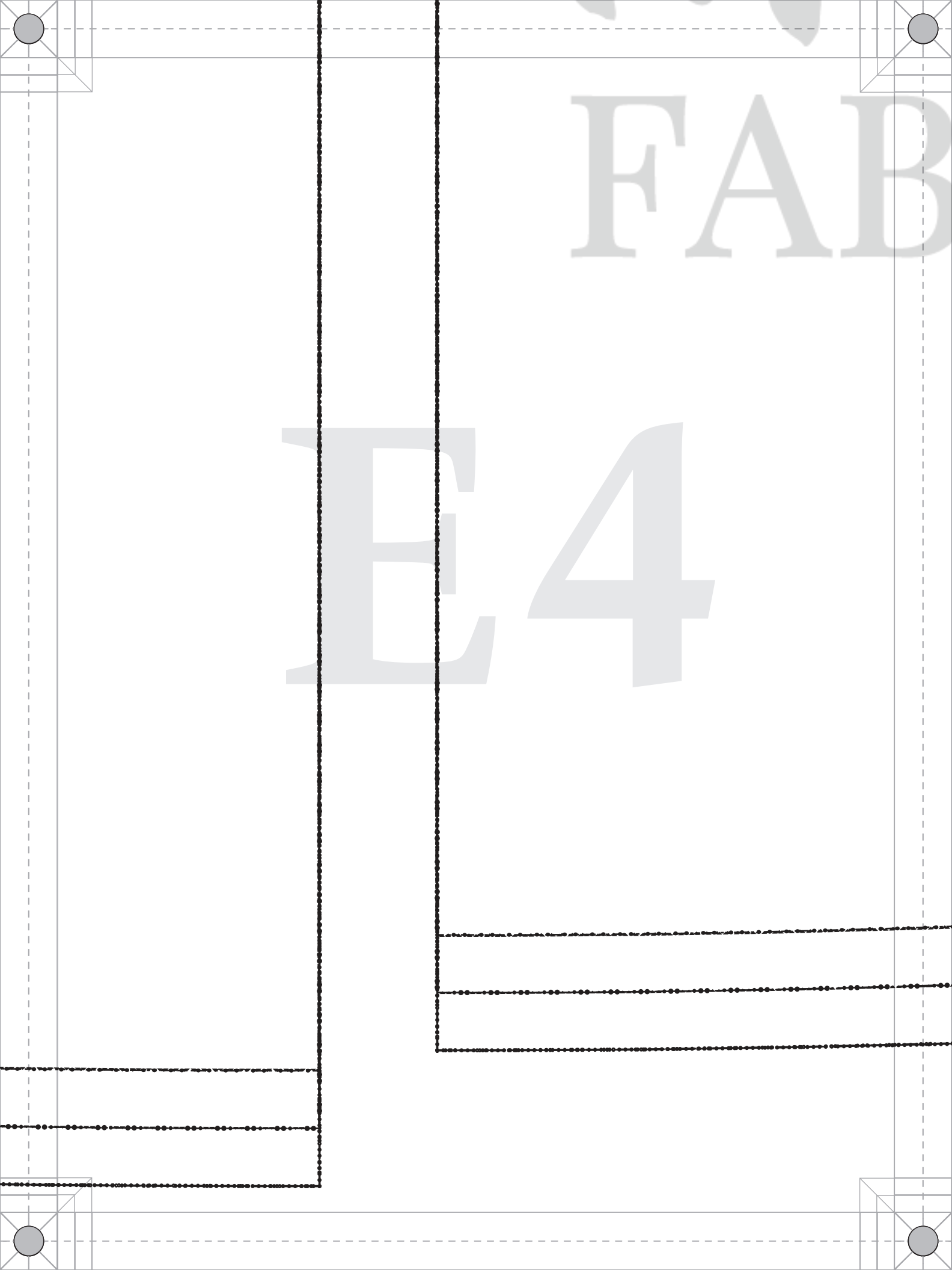
FAB
E4

BRICS

E5

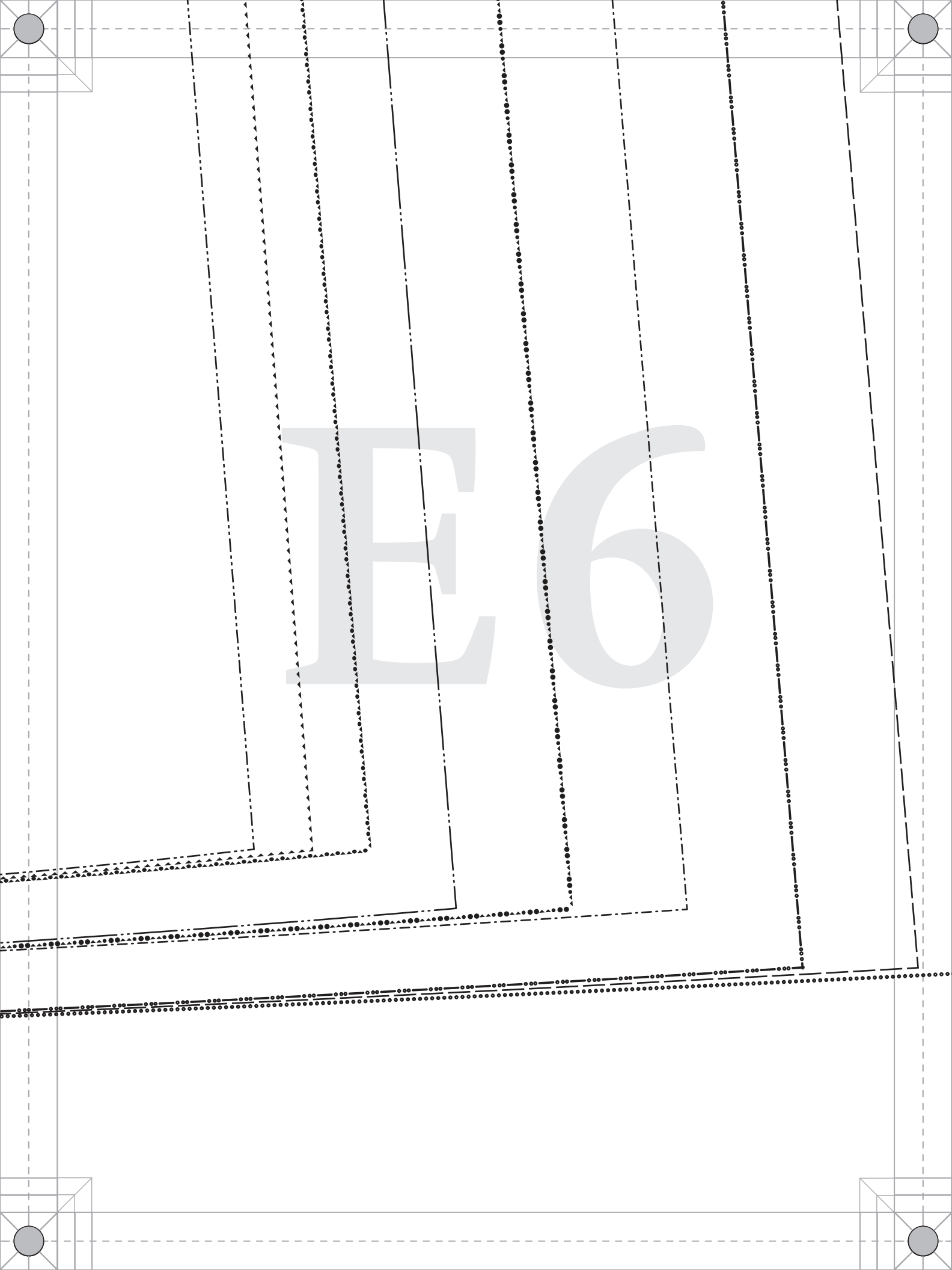
E6

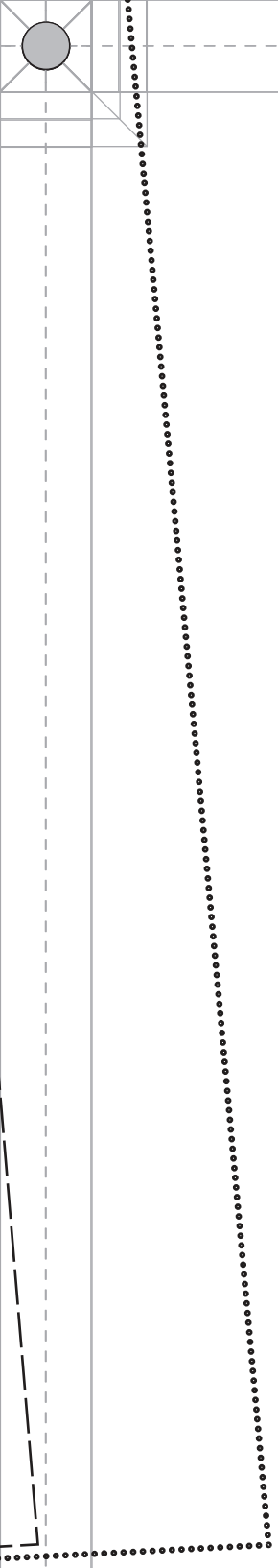

E7



PATTERNS BY mood FABRICS MDF563

#MoodCortinaPattern

"The Cortina Scarf-Collar Coat" MDF563

D - FRONT FACING

FABRIC: Cut 2 mirrored

Ladies Sizes XS to 5XL

1/2" seam allowances (SA's) included

F3



F4

FABRICS F6

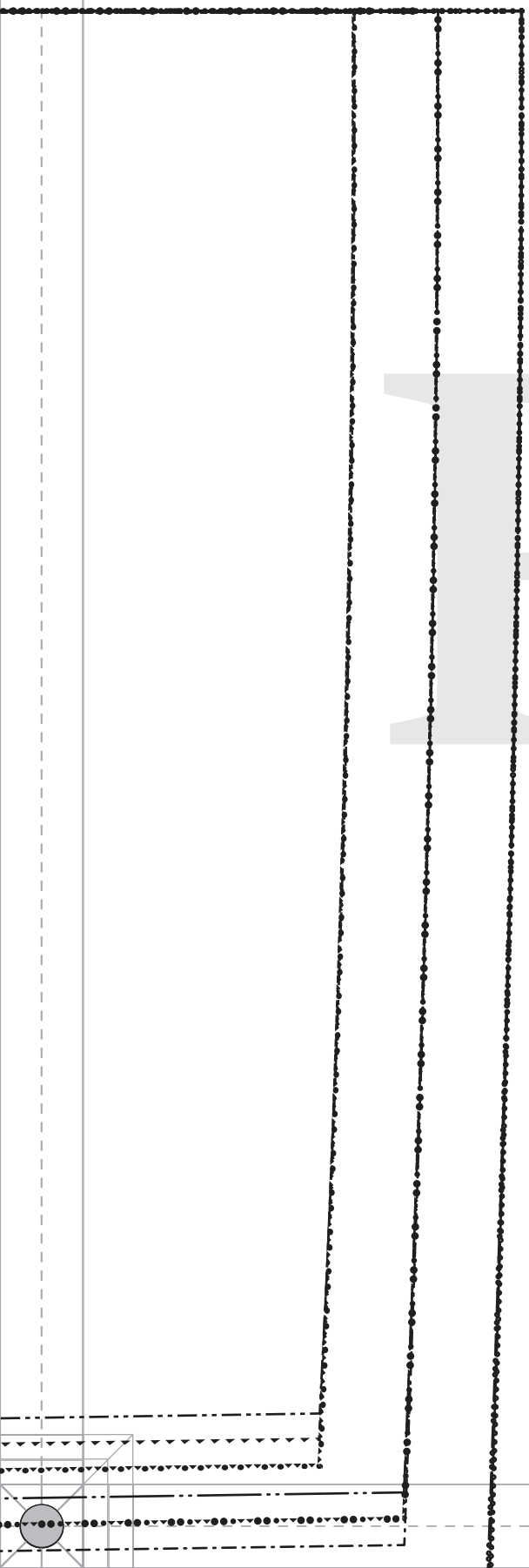

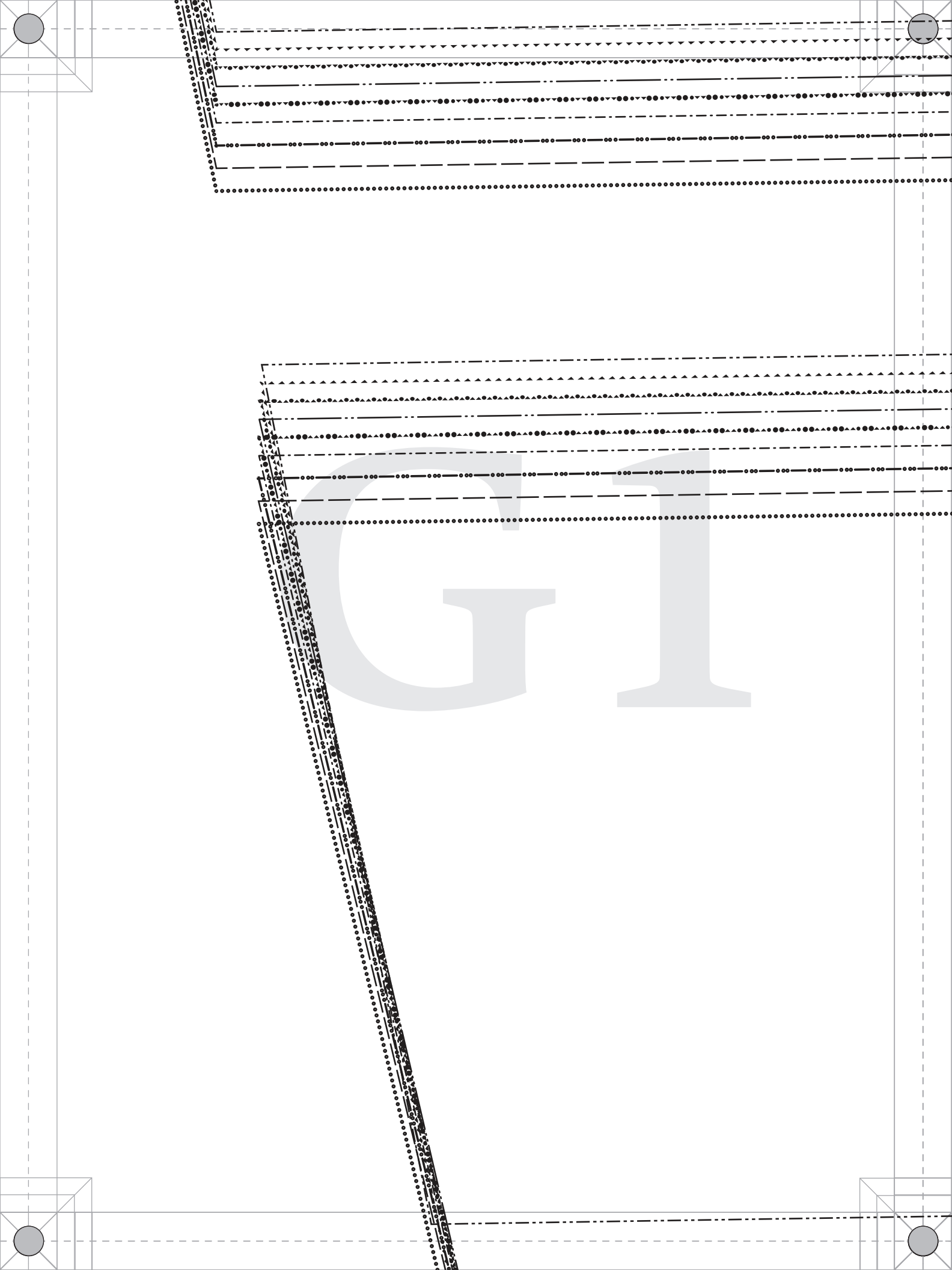

PATTERNS BY mood FABRICS MDF563

#MoodCortinaPattern

"The Cortina Scarf-Collar Coat" MDF563

C - FRONT LINING

LINING: Cut 2 mirrored

Ladies Sizes XS to 5XL

1/2" seam allowances (SA's) included

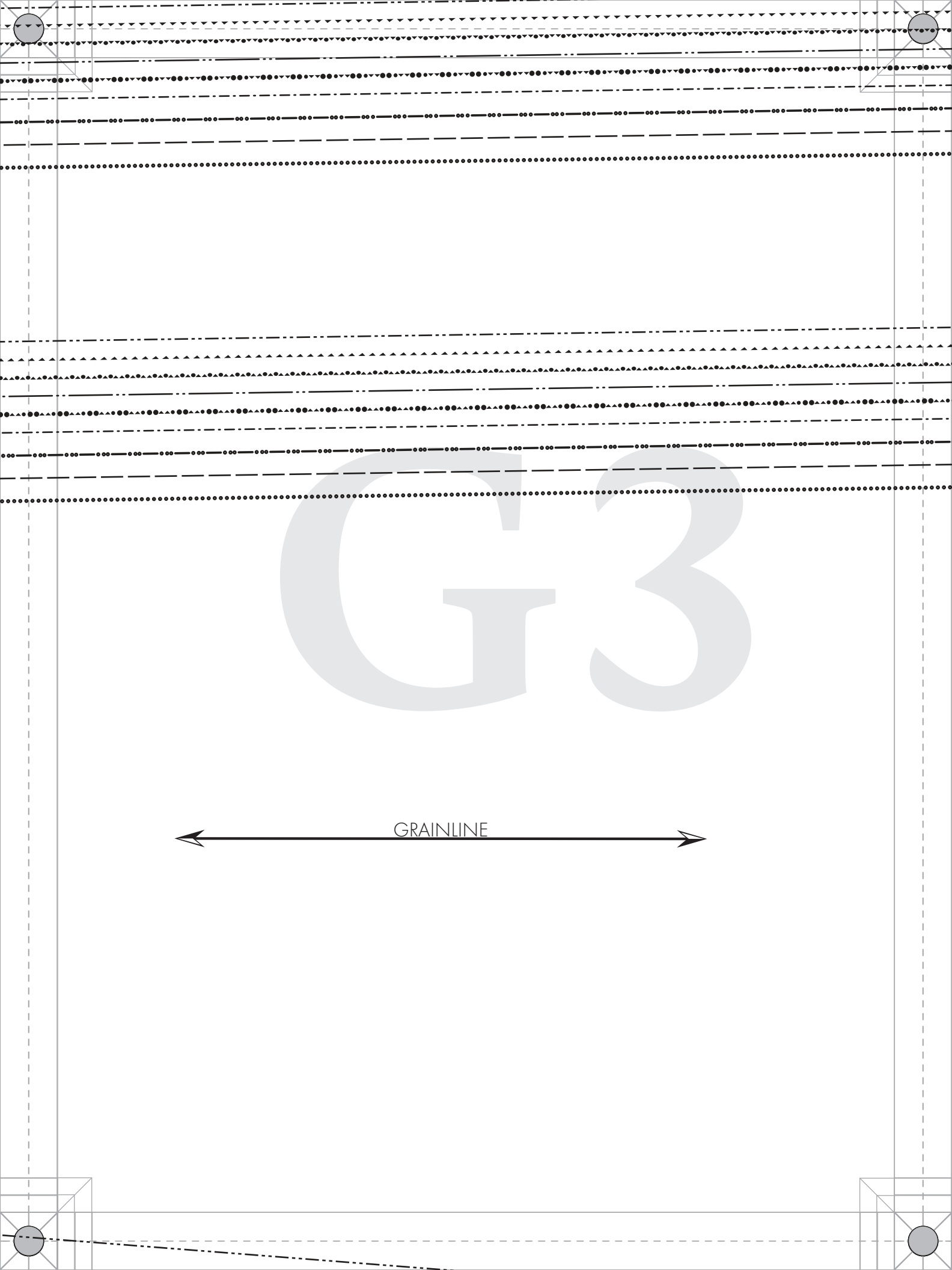
G3
GRAINLINE

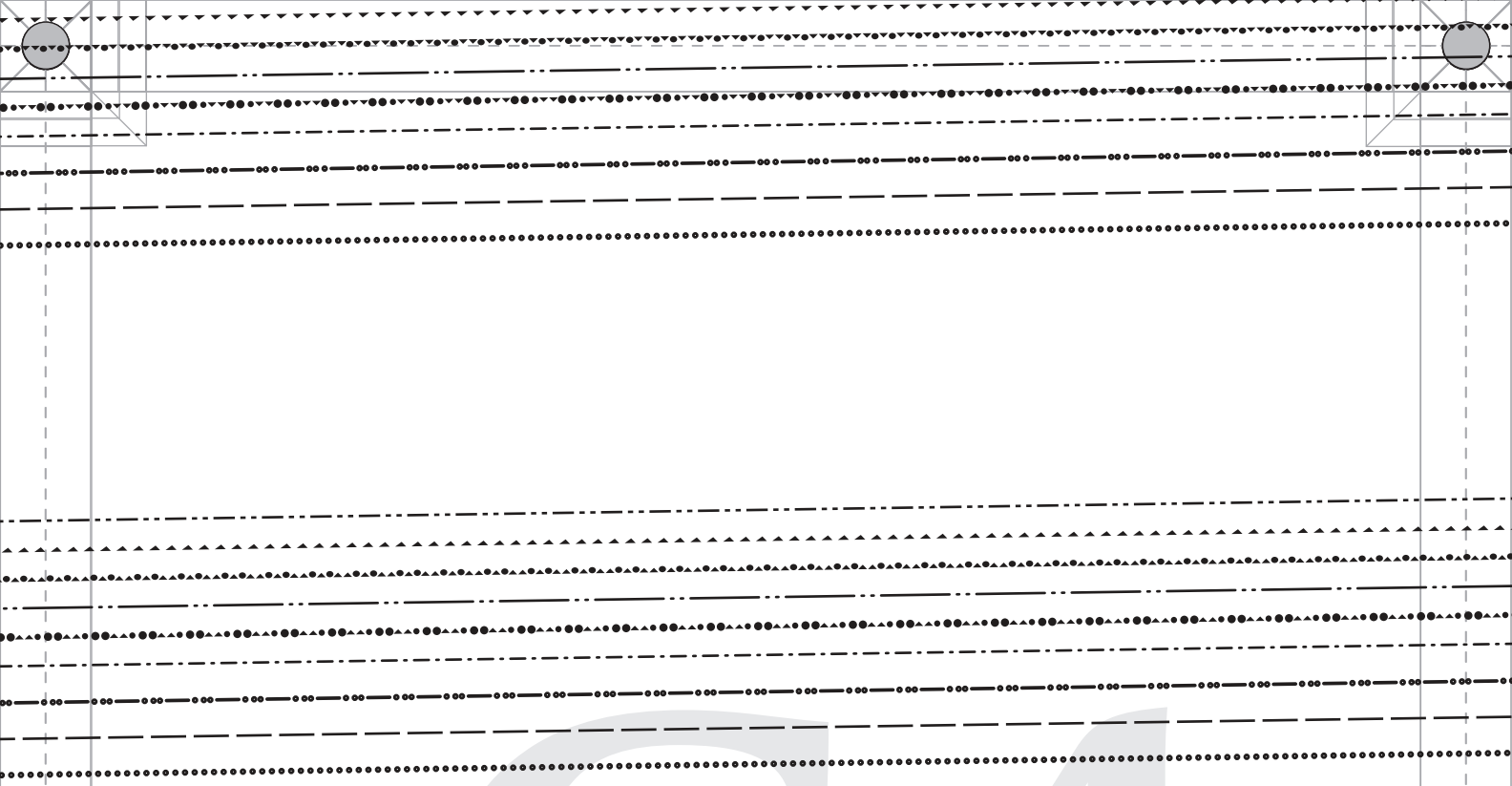
G4

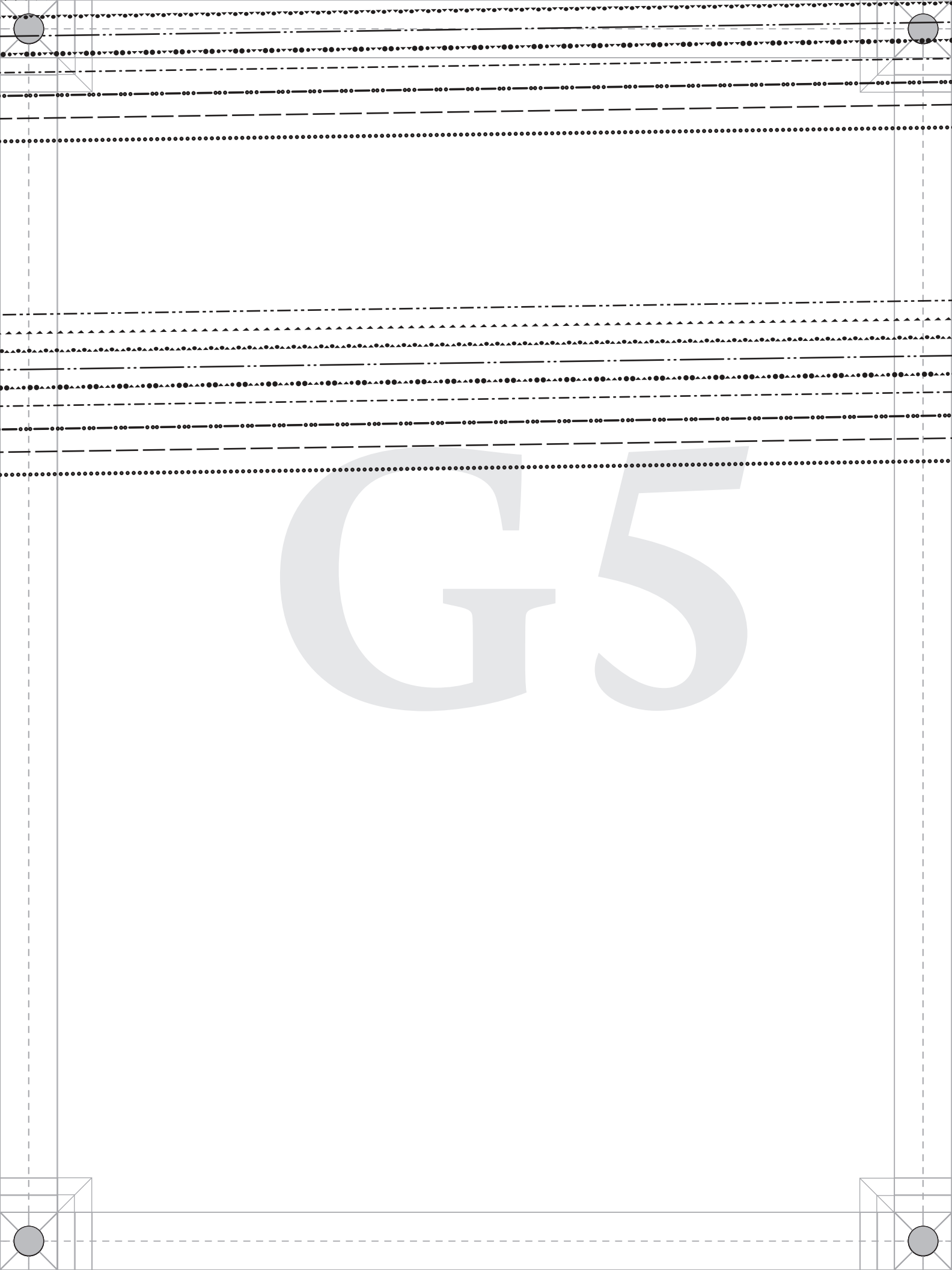
G5

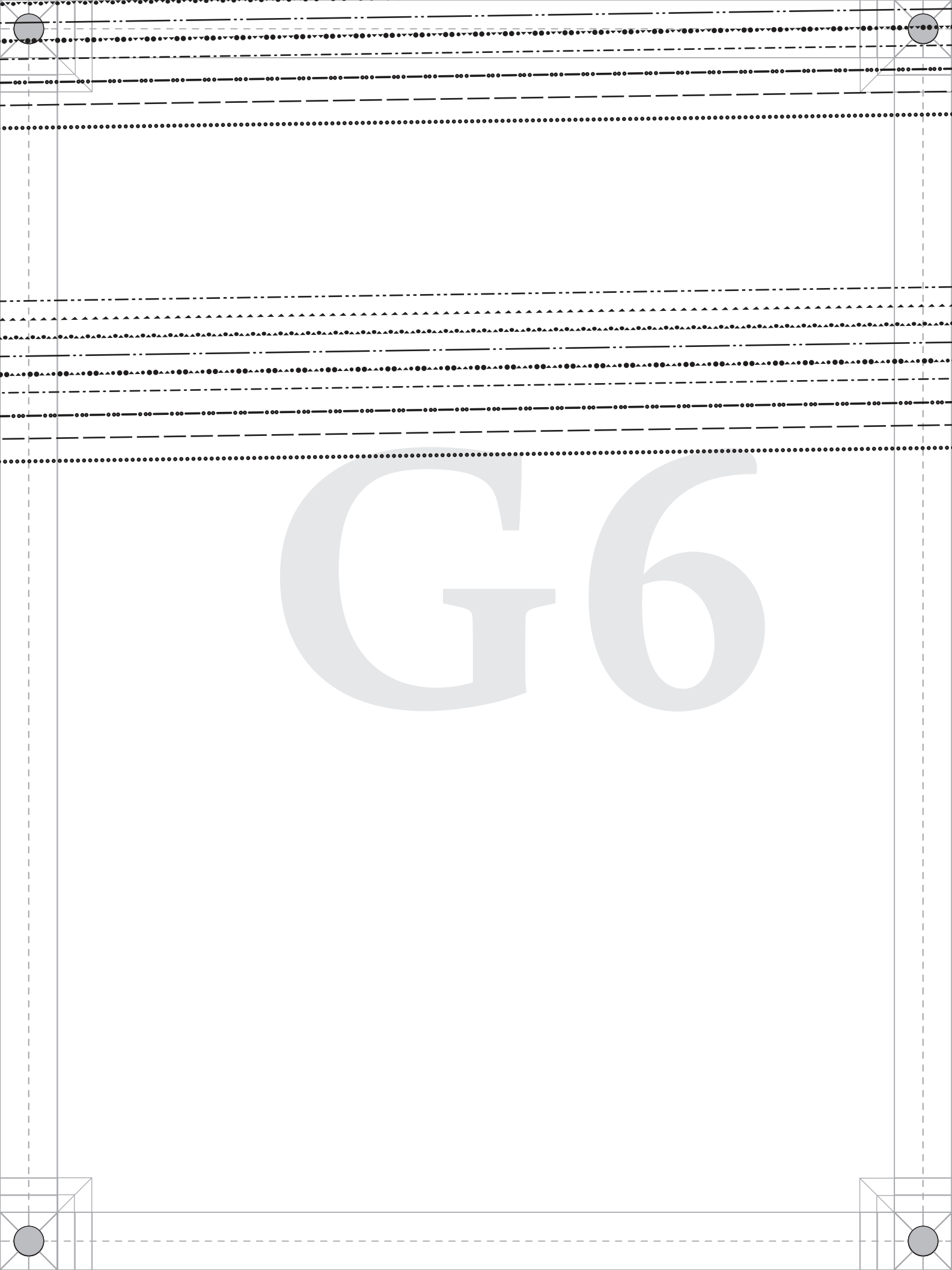

G6

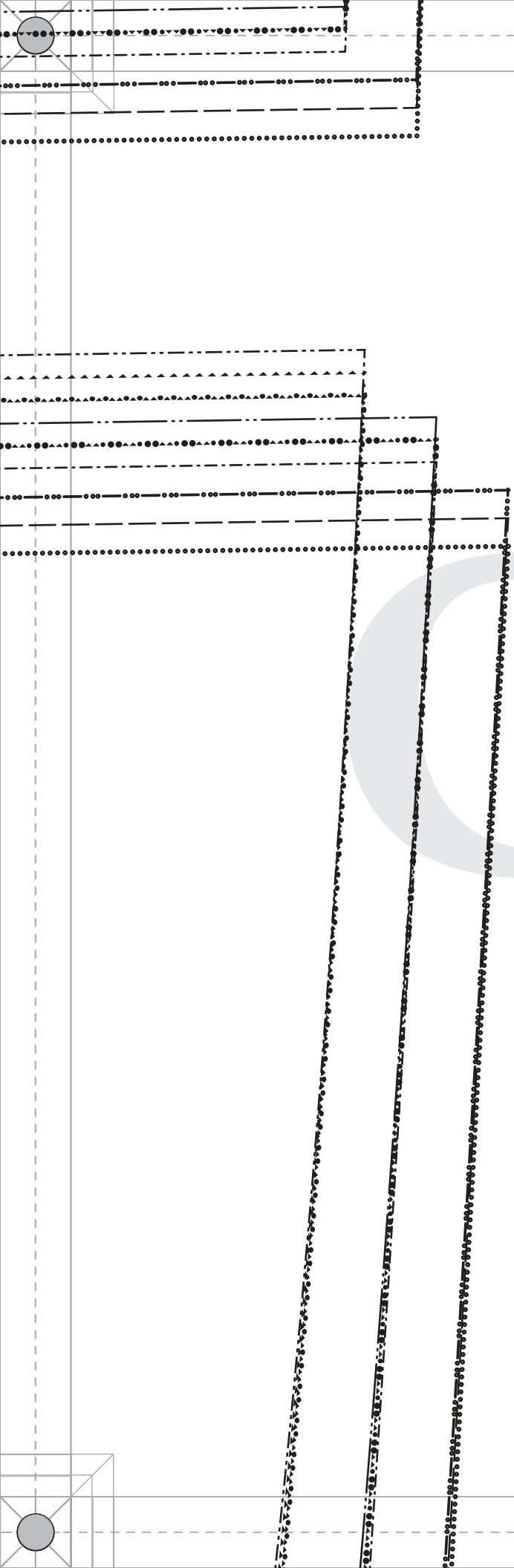

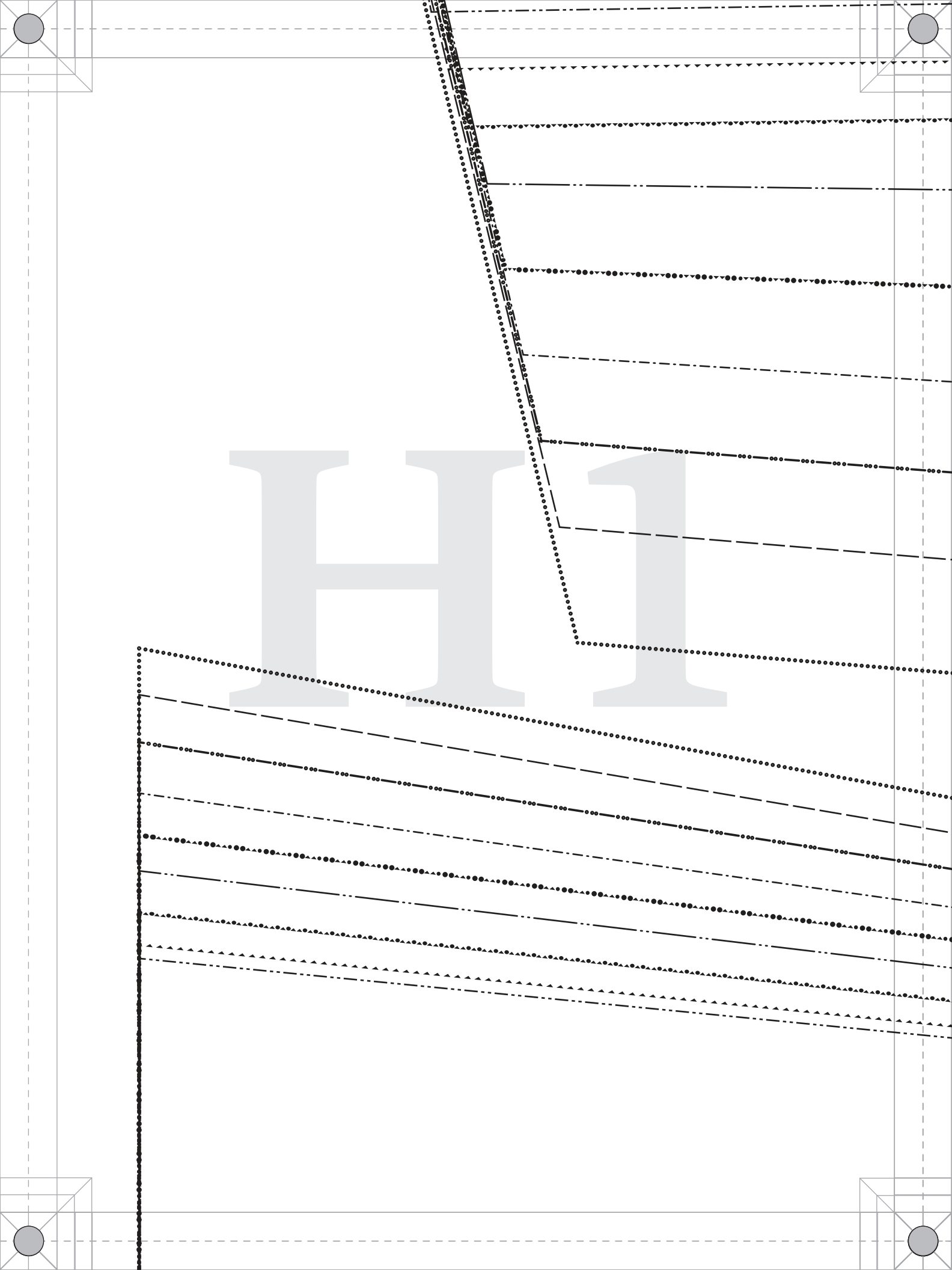

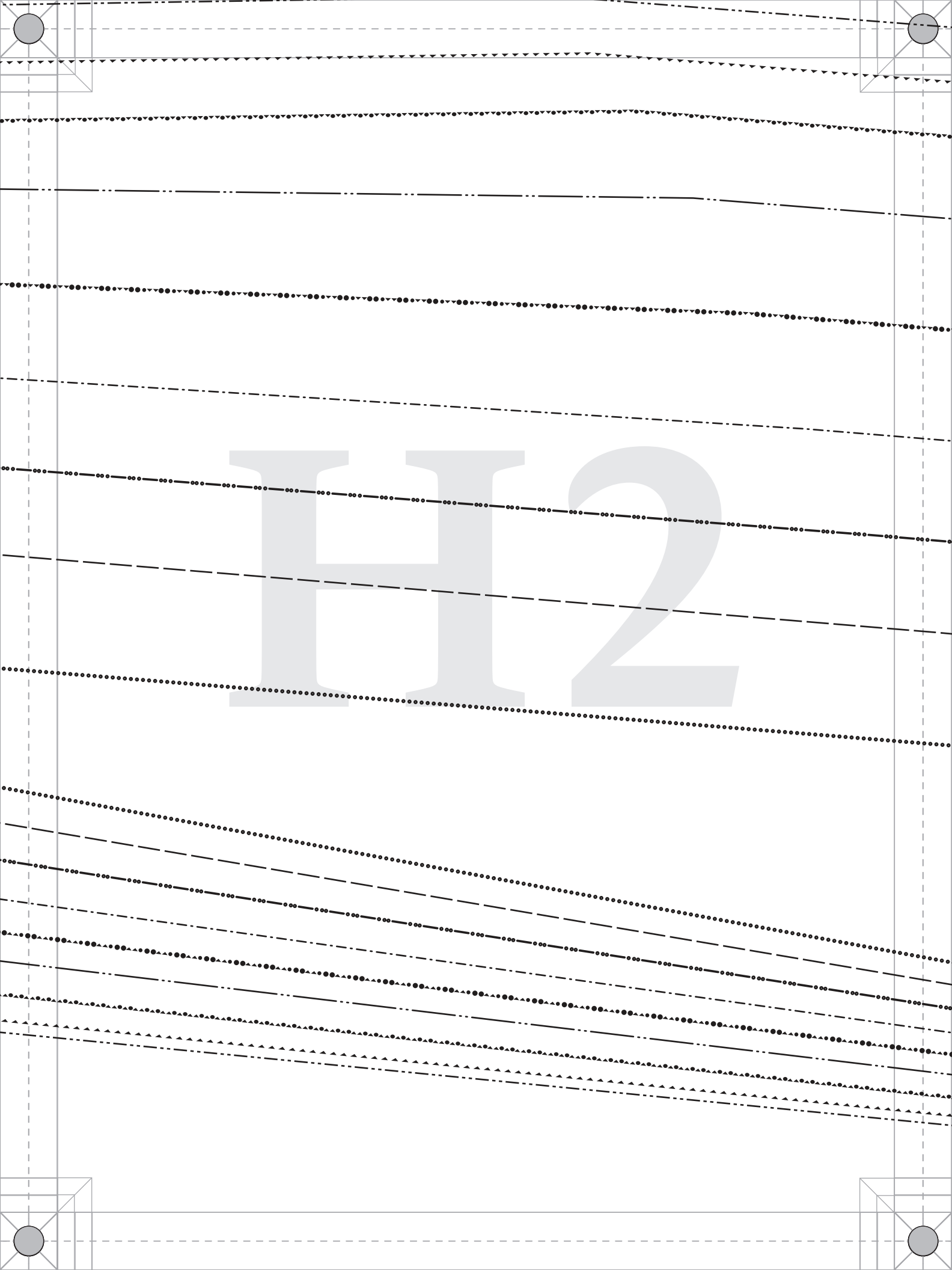
H2

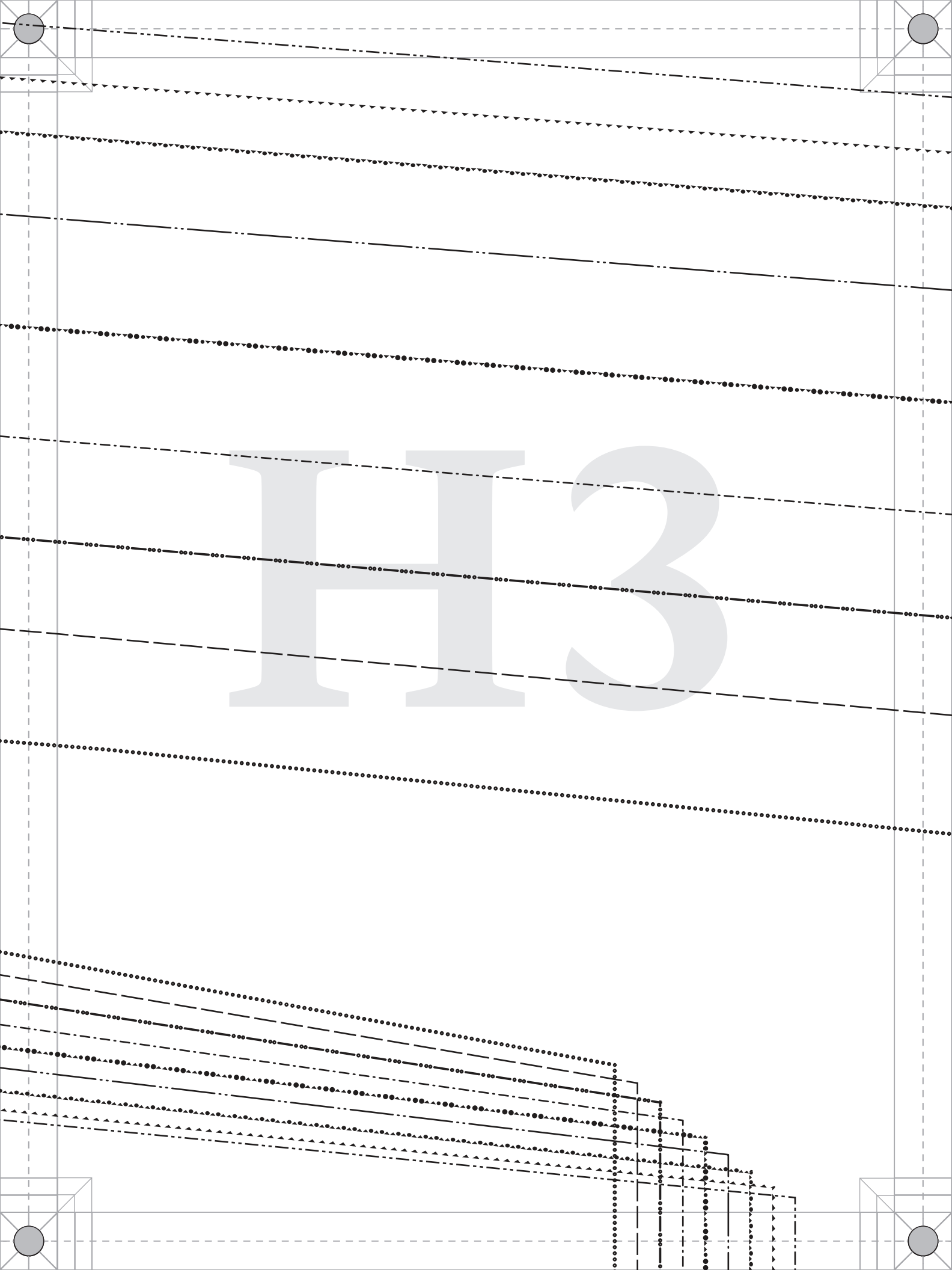
H3

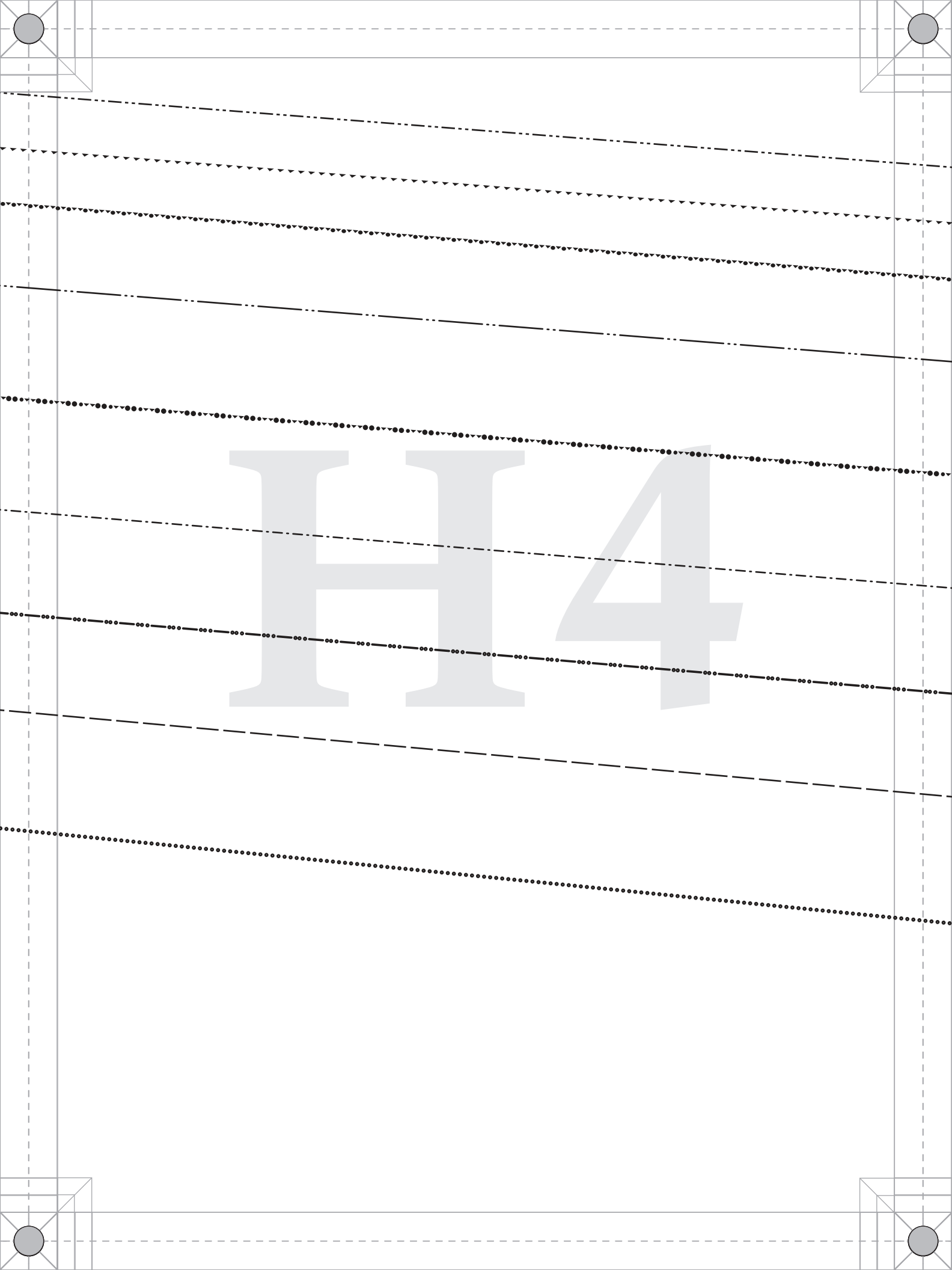
H4

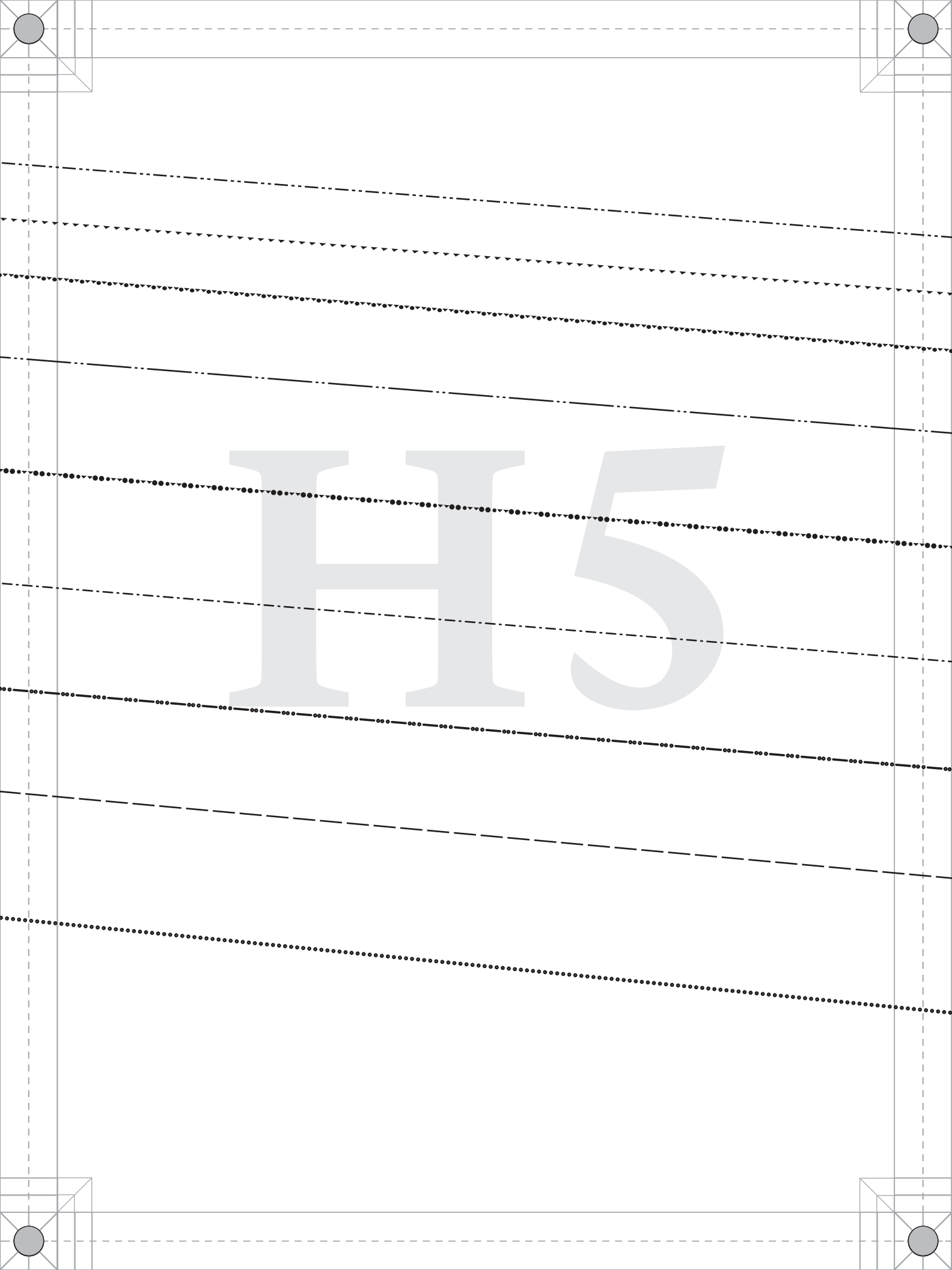
H5

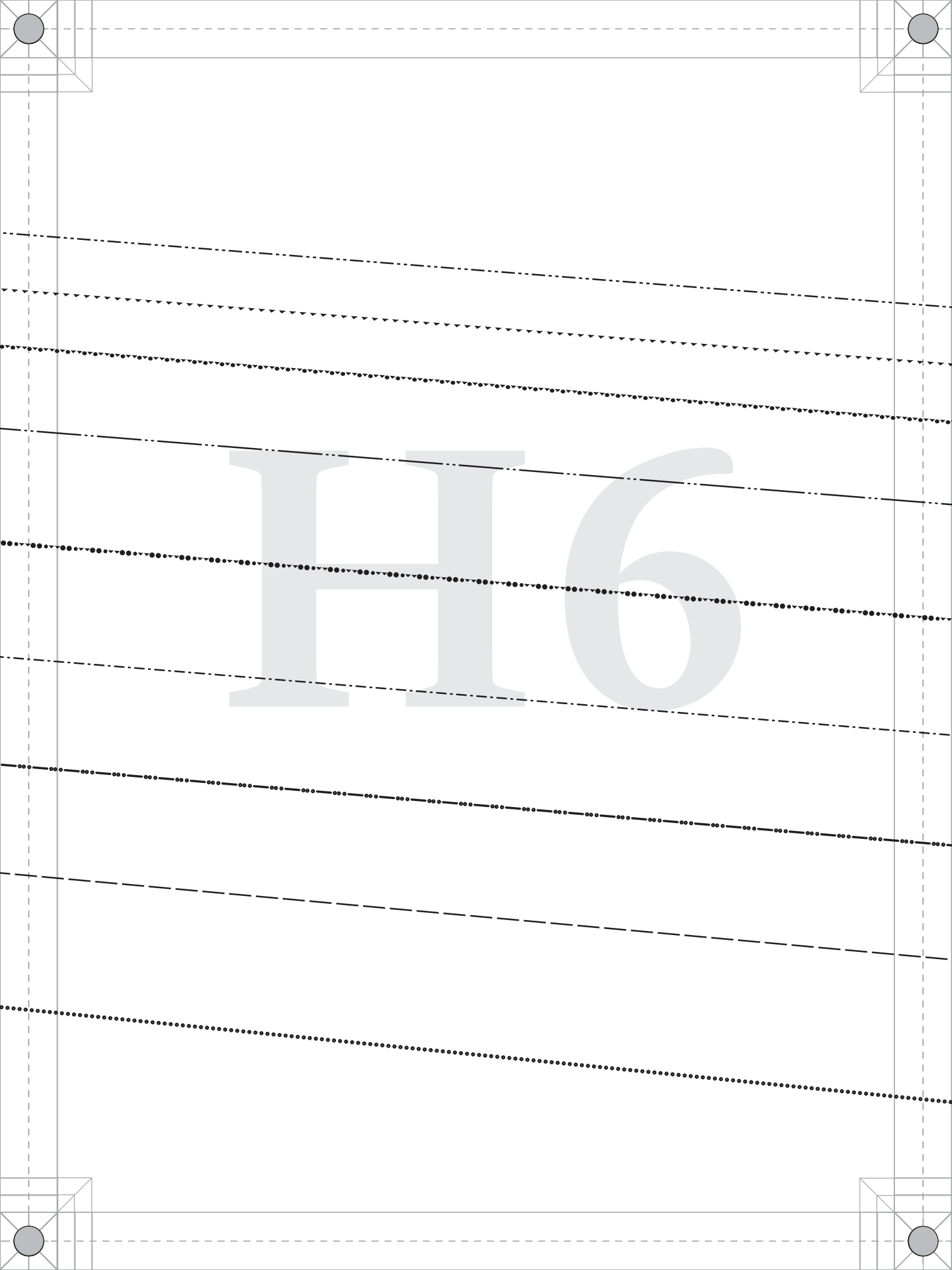
H6

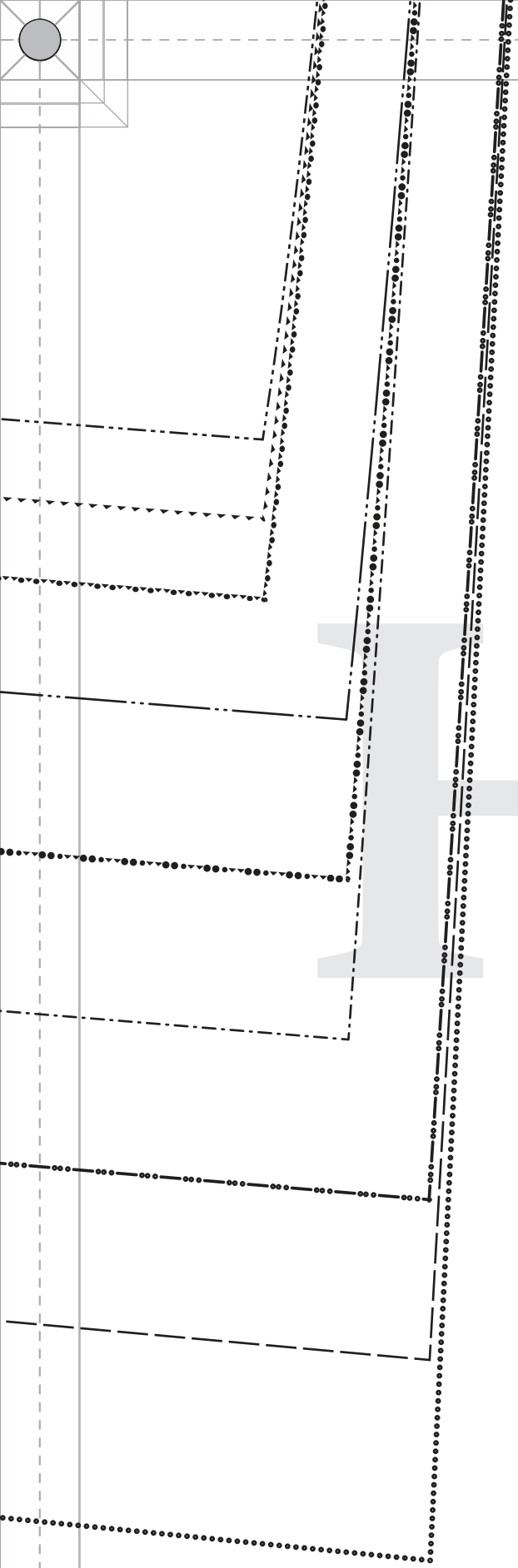

PATTERNS BY mood FABRICS MDF563

#MoodCortinaPattern

"The Cortina Scarf-Collar Coat" MDF563

F - SLEEVES

FABRIC: Cut 2 mirrored
LINING: Cut 2 mirrored

Ladies Sizes XS to 5XL
1/2" seam allowances (SA's) included



12

FABRICS

I3

PATTERNS BY mood FABRICS MDF563

#MoodCortinaPattern

"The Cortina Scarf-Collar Coat"
MDF563

H - POCKET FLAPS
FABRIC: Cut 2

Ladies Sizes XS to 5XL
1/2" seam allowances (SA's) included

XS-M

L-2XL

3XL-5XL

PATTERNS BY mood FABRICS MDF563

#MoodCortinaPattern

"The Cortina Scarf-Collar Coat" MDF563

G - POCKETS

LINING: Cut 2 mirrored sets

Ladies Sizes XS to 5XL
1/2" seam allowances (SA's) included

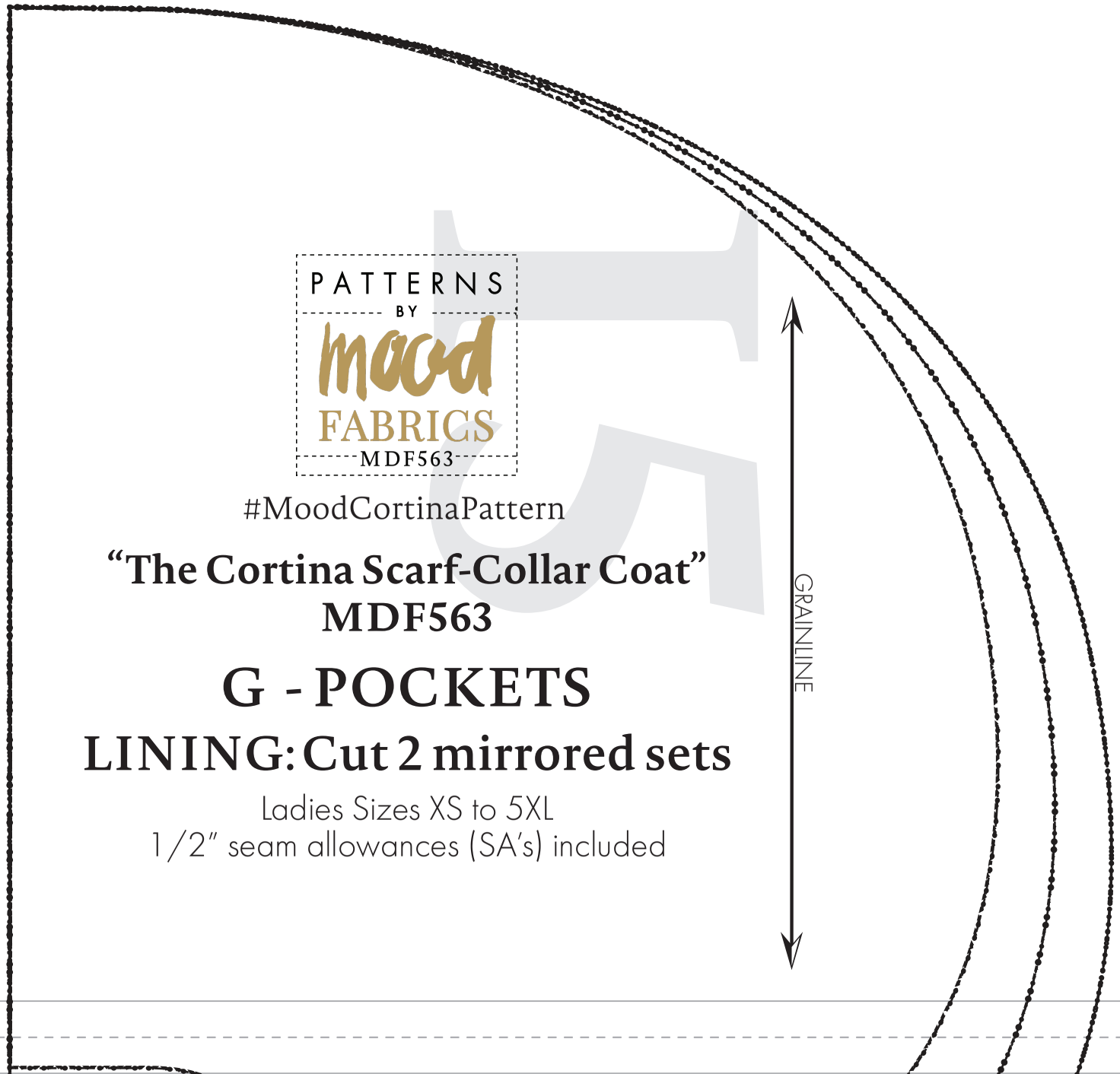

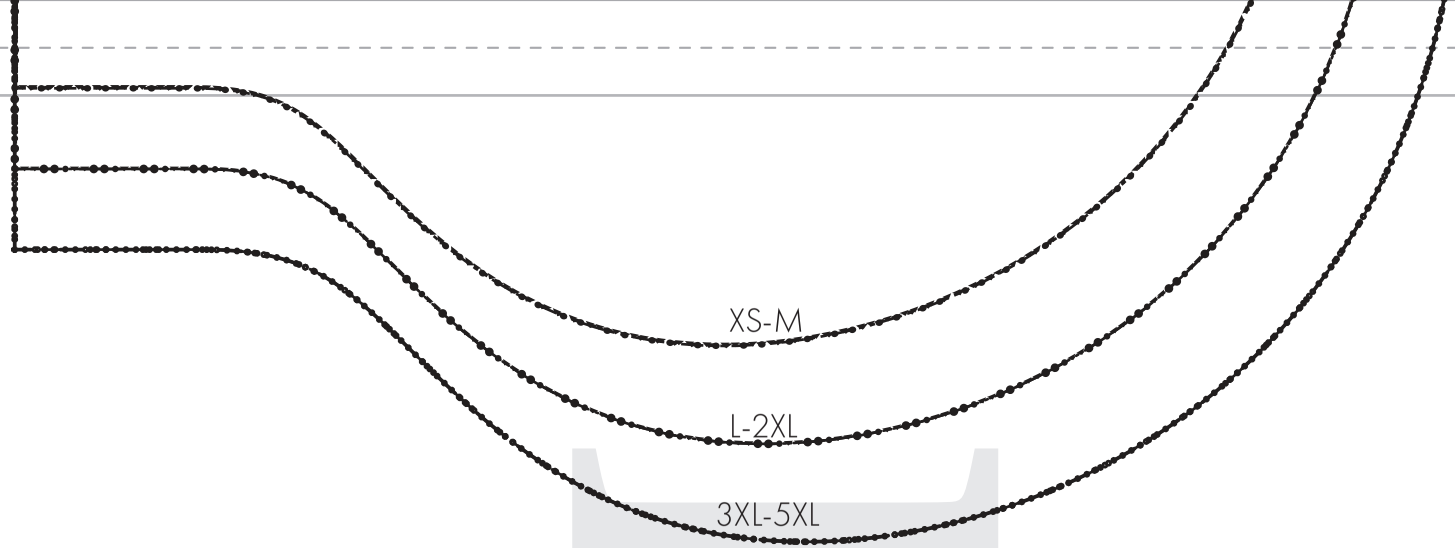
XS-M
L-2XL
3XL-5XL

