PATTERNS BY mood FABRICS

MDF496

#MoodTopekaPattern

"The Topeka Keyhole Dress"

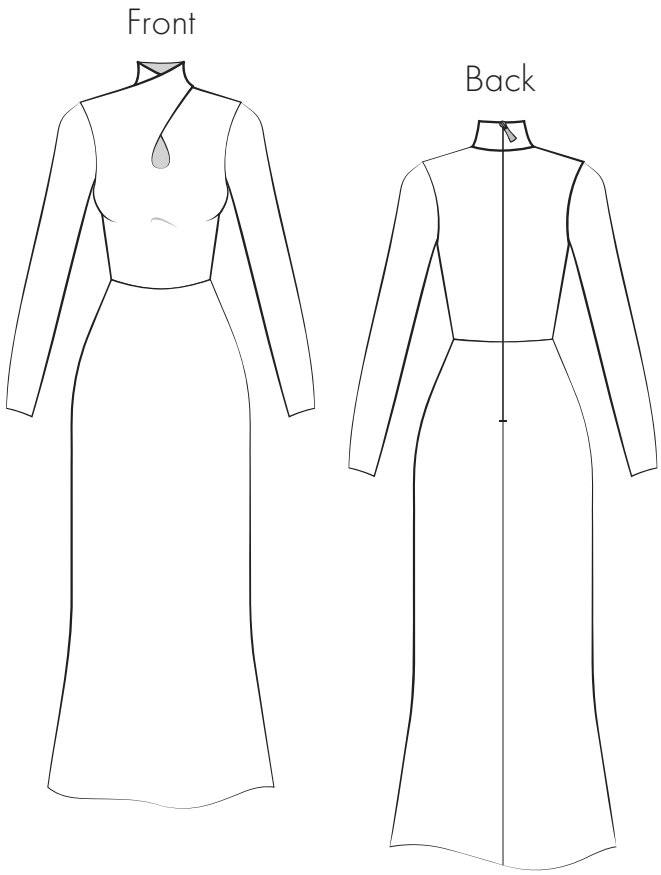

STOP!

Print only this page first to check accuracy. The Mood square above should measure 2 inches. Print "actual size" in "portrait" mode (not auto center). Formatted for both US Letter & A4 paper sizes.

Formatted for both US Letter & A4 Paper

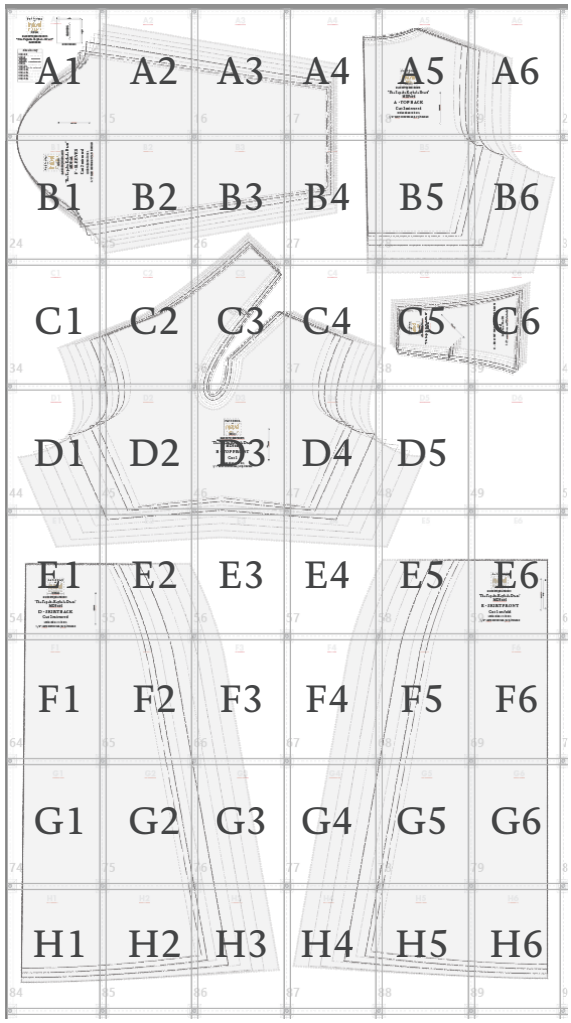

Trimless Option:
This is the fastest! No trimming needed! Place left-side margins over right-side margins, overlapping dashed lines and dots. In the same fashion, top margins will overlap bottom margins. Slight unprinted gaps are normal for this method.

Trimmed Option:
This removes any unprinted gaps. Trim along the top and right margins at the dashed lines. Overlap the trimmed margins to the untrimmed margins, matching dashed lines and dots.

Tip! Build rows first, then join the rows together as you go.

©2026 MoodFabrics.com / MoodSewciety.com
Mass production, resale, or distribution of this pattern in any form is strictly prohibited.

mood SEWCIETY

#MoodTopekaPattern

PATTERNS BY mood FABRICS MDF496

MDF496 - "The Topeka Keyhole Dress"

Ladies Sizes XS to 5XL

BODY MEASUREMENTS - IN INCHES (Chart 1)

SIZE	XS	S	M	L	XL	2XL	3XL	4XL	5XL
BUST	31- 32	33 - 34	35 - 36	37 - 39	40 - 43	44 - 47	48 - 51	52 - 55	56 - 60
WAIST	23 - 24	25 - 26	27 - 28	29 - 31	32 - 35	36 - 39	40 - 43	44 - 47	48 - 52
HIPS	34 - 35	36 - 37	38 - 39	40 - 42	43 - 46	47 - 50	51 - 54	55 - 58	59 - 63

APPROXIMATE FINISHED GARMENT MEASUREMENTS - IN INCHES (Chart 2)

SIZE	XS	S	M	L	XL	2XL	3XL	4XL	5XL
BUST	34	36	38	41	45	49	53	57	62
WAIST	25	27	29	32	36	40	44	48	53
HIPS	36.5	38.5	40.5	43.5	47.5	51.5	55.5	59.5	64.5

*Designed for stretch fabrics. Size guide is based on the suggested design and wearing ease for this style. You can also choose the size according to your desired finished garment measurements, blending between sizes as needed. Measure the printed patterns to make sure the dimensions are according to the desired fitting and adjust if needed before cutting the fabric. For best results, sew a test garment in a similar fabric to adjust your pattern.

Recommended Fabric: Ponte Knit, Stretch Fabric.

We love creating these free patterns for the community and we want to keep them free! In return, we hope you check out MoodFabrics.com for your next project!

Want to use one of our patterns to make a garment to sell? Our patterns are royalty-free! We just ask that you credit us with:
MoodSewciety.com
or
MoodFabrics.com
in your product description.

FOR SEWING INSTRUCTIONS AND MORE INFORMATION:
Scan the QR code or visit MoodSewciety.com and search "MDF496"

1/2" seam allowances (SA's) included unless stated otherwise.

REMEMBER TO SHARE YOUR MADE WITH MOOD LOOK!

Tag us and use:
#MoodTopekaPattern
for a shot at being featured on our social media

@mood.fabrics
@moodfabrics
@Mood_Fabrics
@moodfabrics
@moodfabrics

©2026 MoodFabrics.com / MoodSewciety.com
Mass production, resale, or distribution of this pattern in any form is strictly prohibited.

mood SEWCIETY

The Mood Sewciety Team

PATTERNS BY mood FABRICS MDF496

"The Topeka Keyhole Dress"

PATTERN PIECES

A	**TOP BACK** FABRIC - CUT 2 MIRRORED
B	**TOP FRONT** FABRIC - CUT 1
C	**FRONT NECK EXTENSION** FABRIC - CUT 1
D	**SKIRT BACK** FABRIC - CUT 2 MIRRORED
E	**SKIRT FRONT** FABRIC - CUT 1 ON FOLD
F	**SLEEVES** FABRIC - CUT 2 MIRRORED

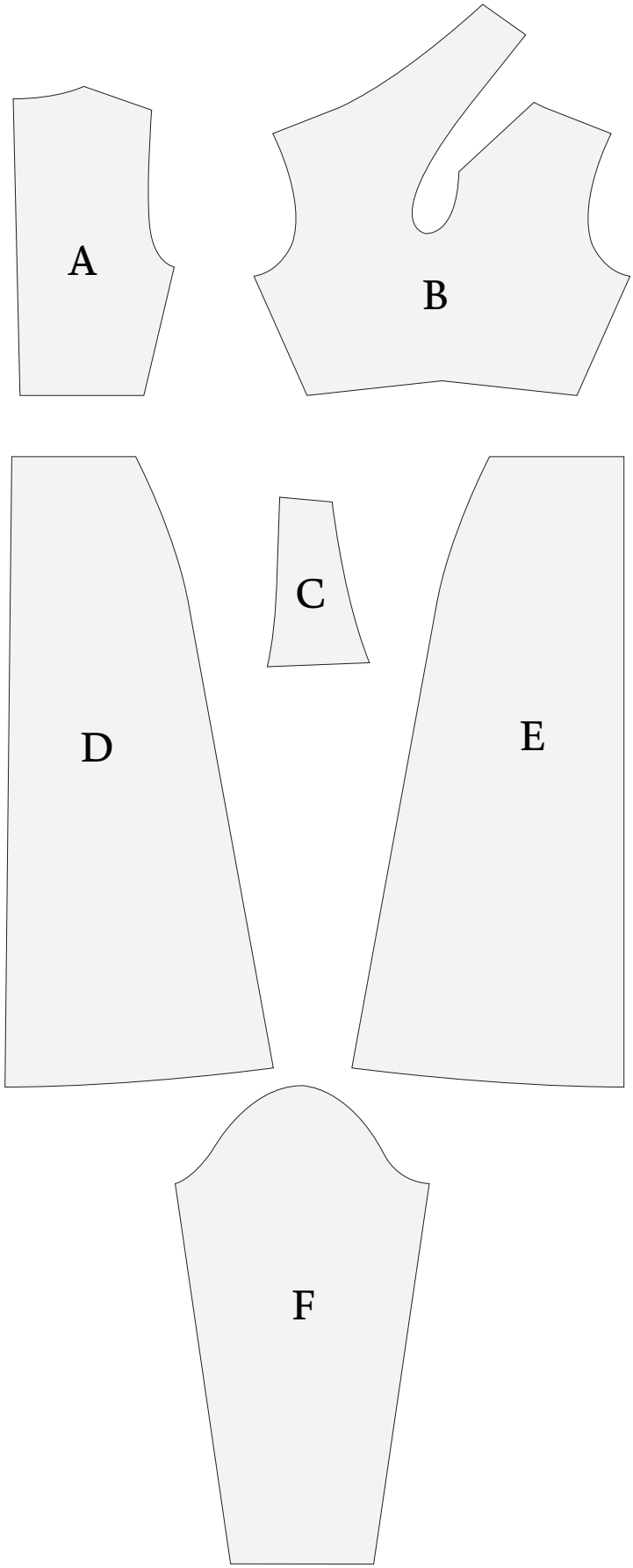

©2026 MoodFabrics.com / MoodSewciety.com
Mass production, resale, or distribution of this pattern in any form is strictly prohibited.
mood SEWCIETY

PATTERNS BY mood FABRICS MDF496

#MoodTopekaPattern

"The Topeka Keyhole Dress" MDF496

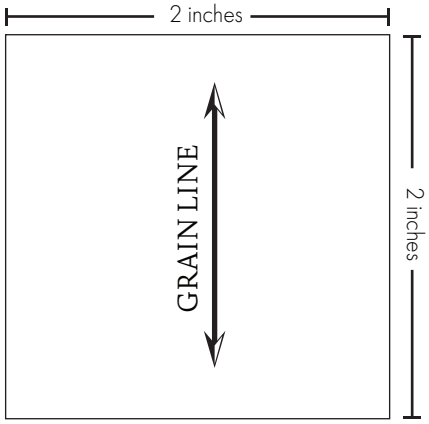

2" PRINT TEST BOX

Size Line Key
SIZE XS
SIZE S
SIZE M
SIZE L
SIZE XL
SIZE 2XL
SIZE 3XL
SIZE 4XL
SIZE 5XL

A1

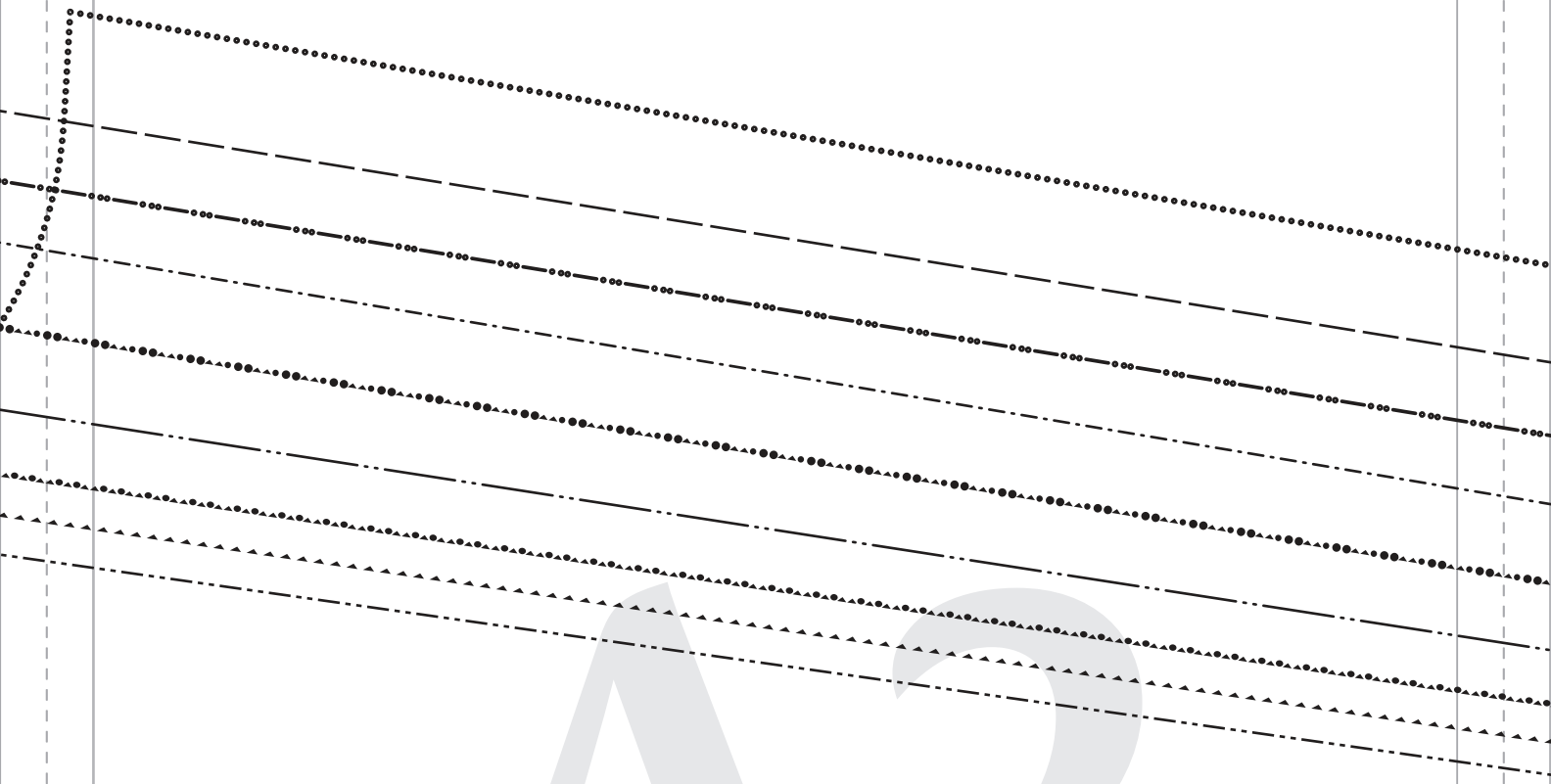

A2

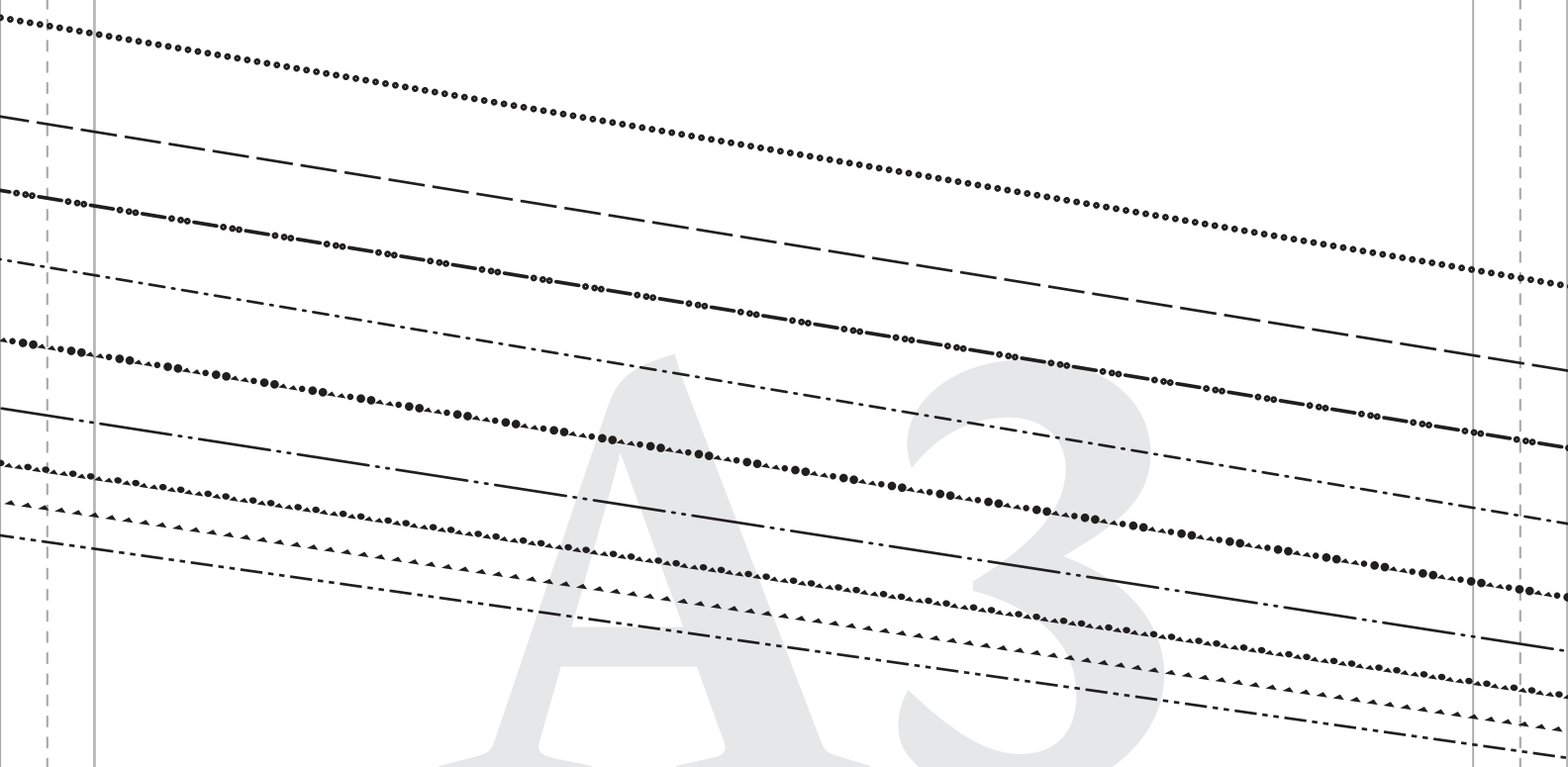
A3

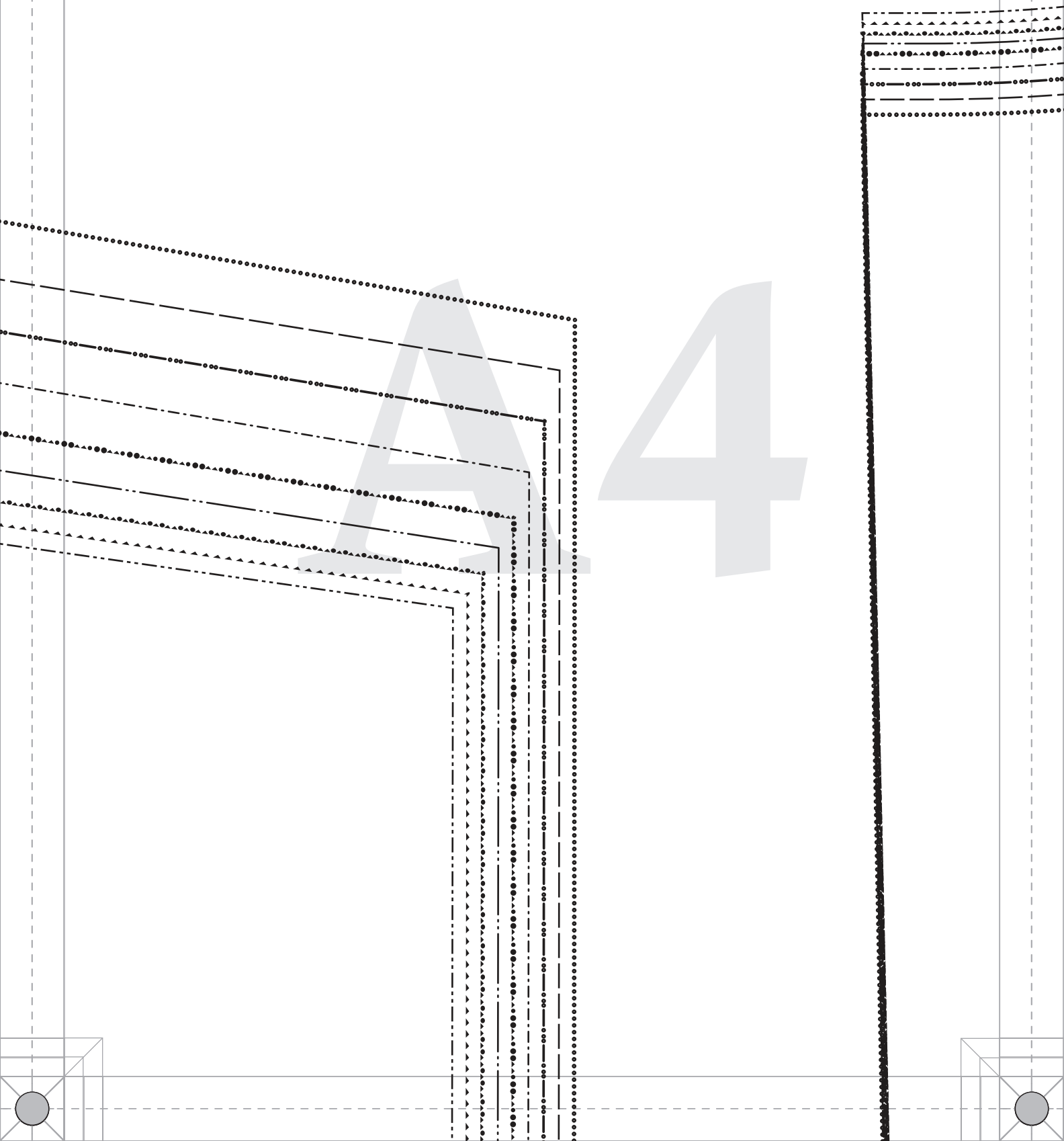
A4



PATTERNS BY mood FABRICS MDF496

#MoodTopekaPattern

"The Topeka Keyhole Dress" MDF496

A - TOP BACK

Cut 2 mirrored

Ladies Sizes XS to 5XL

1/2" seam allowances (SA's) included

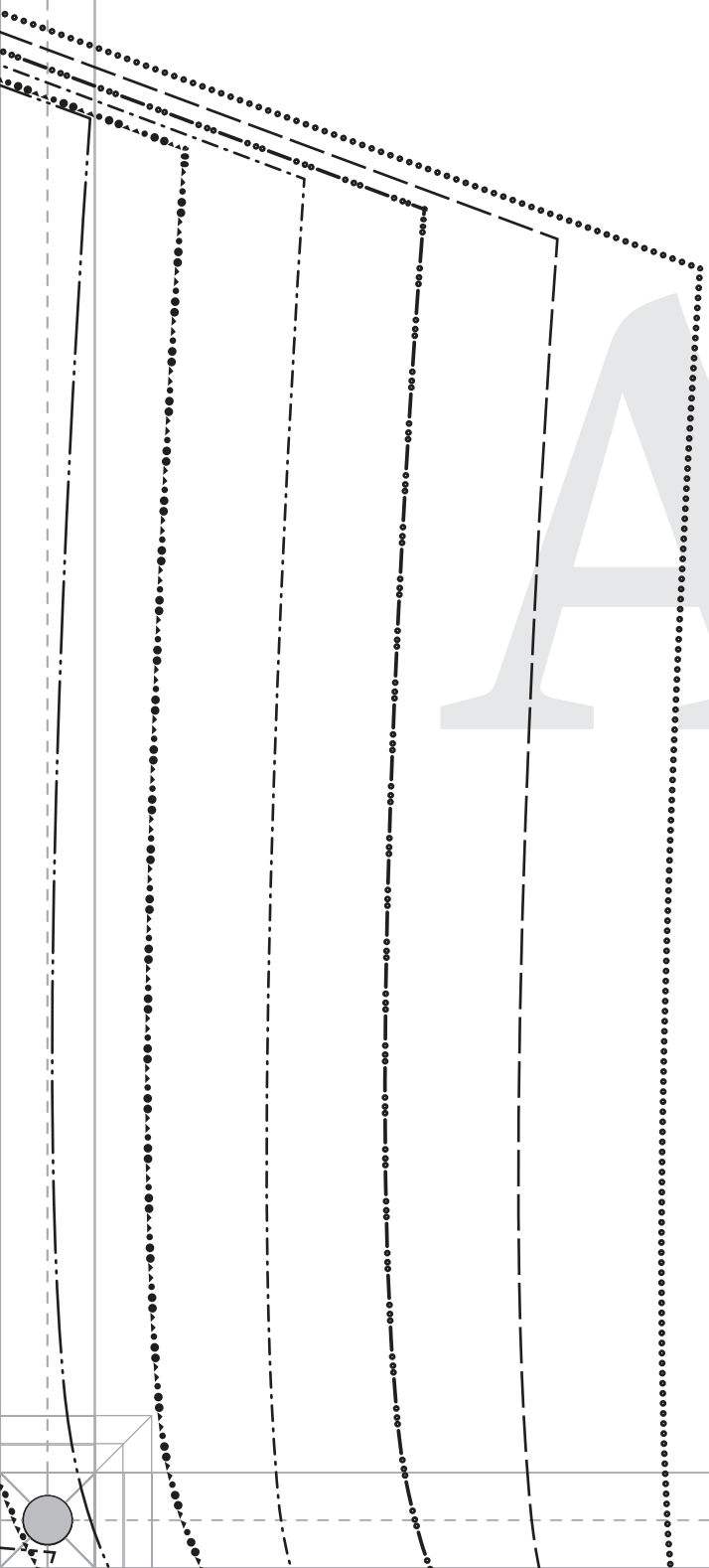

A6

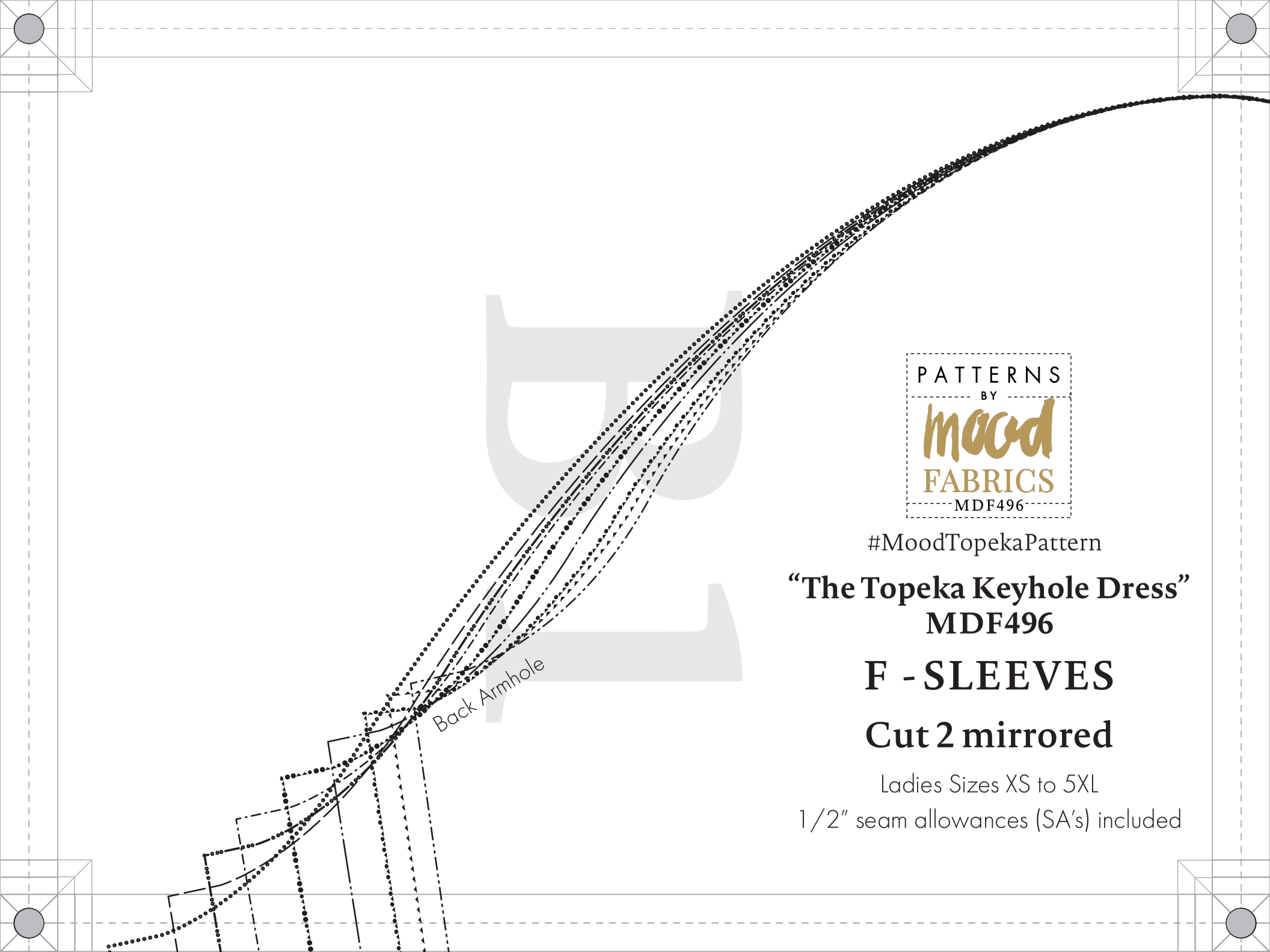

PATTERNS BY mood FABRICS MDF496

#MoodTopekaPattern

"The Topeka Keyhole Dress" MDF496

F - SLEEVES

Cut 2 mirrored

Ladies Sizes XS to 5XL

1/2" seam allowances (SA's) included

B2

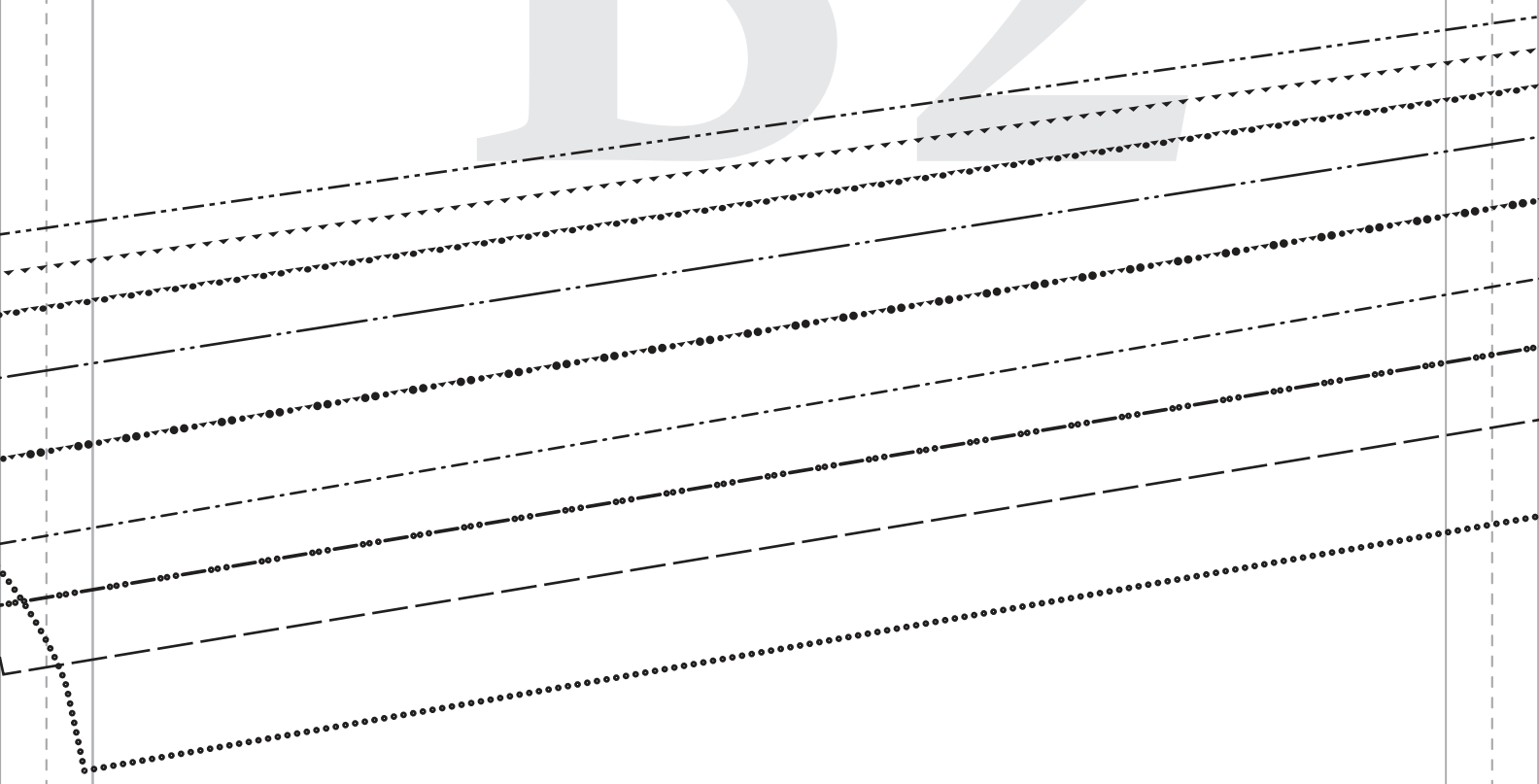

B3

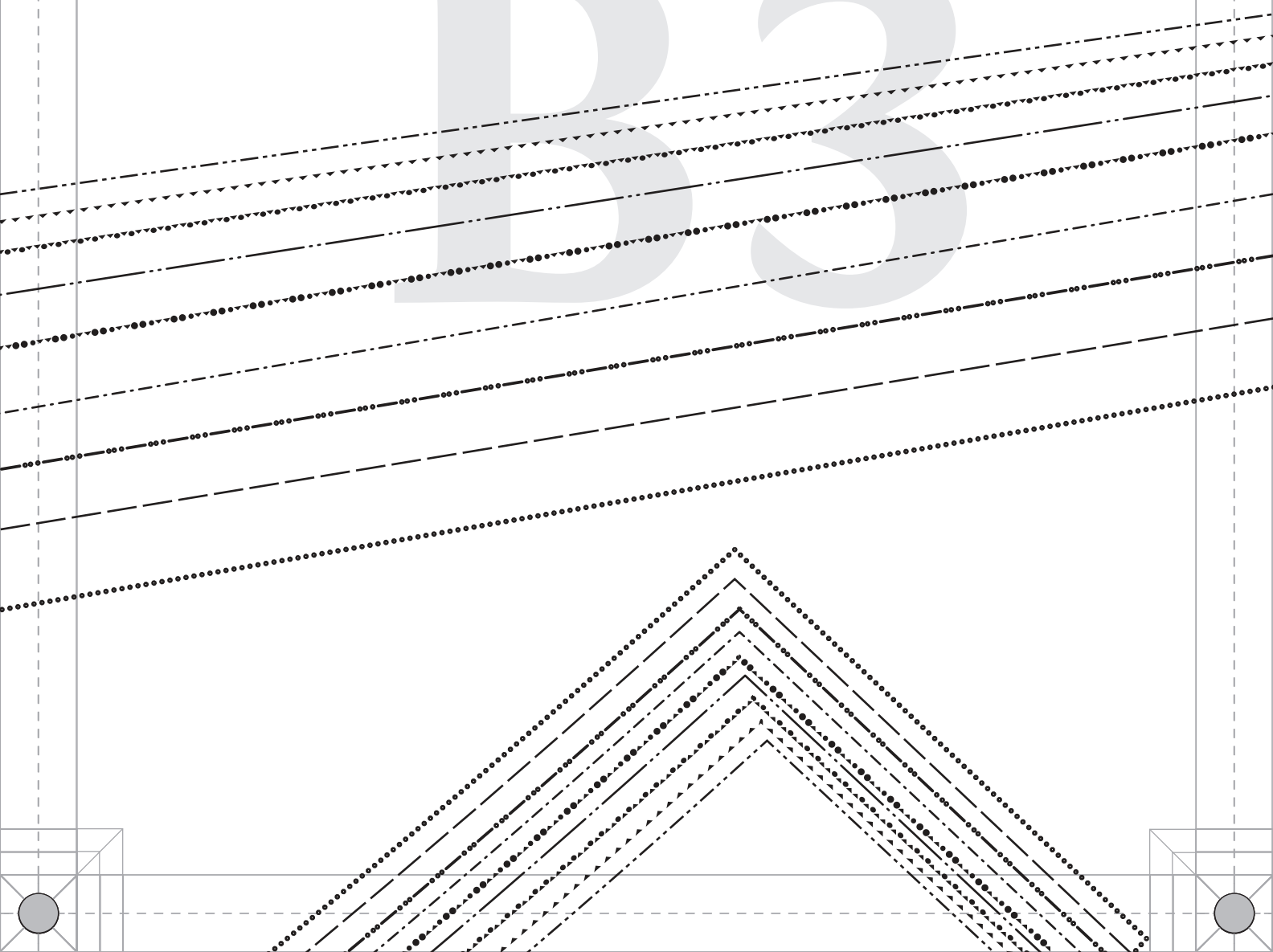

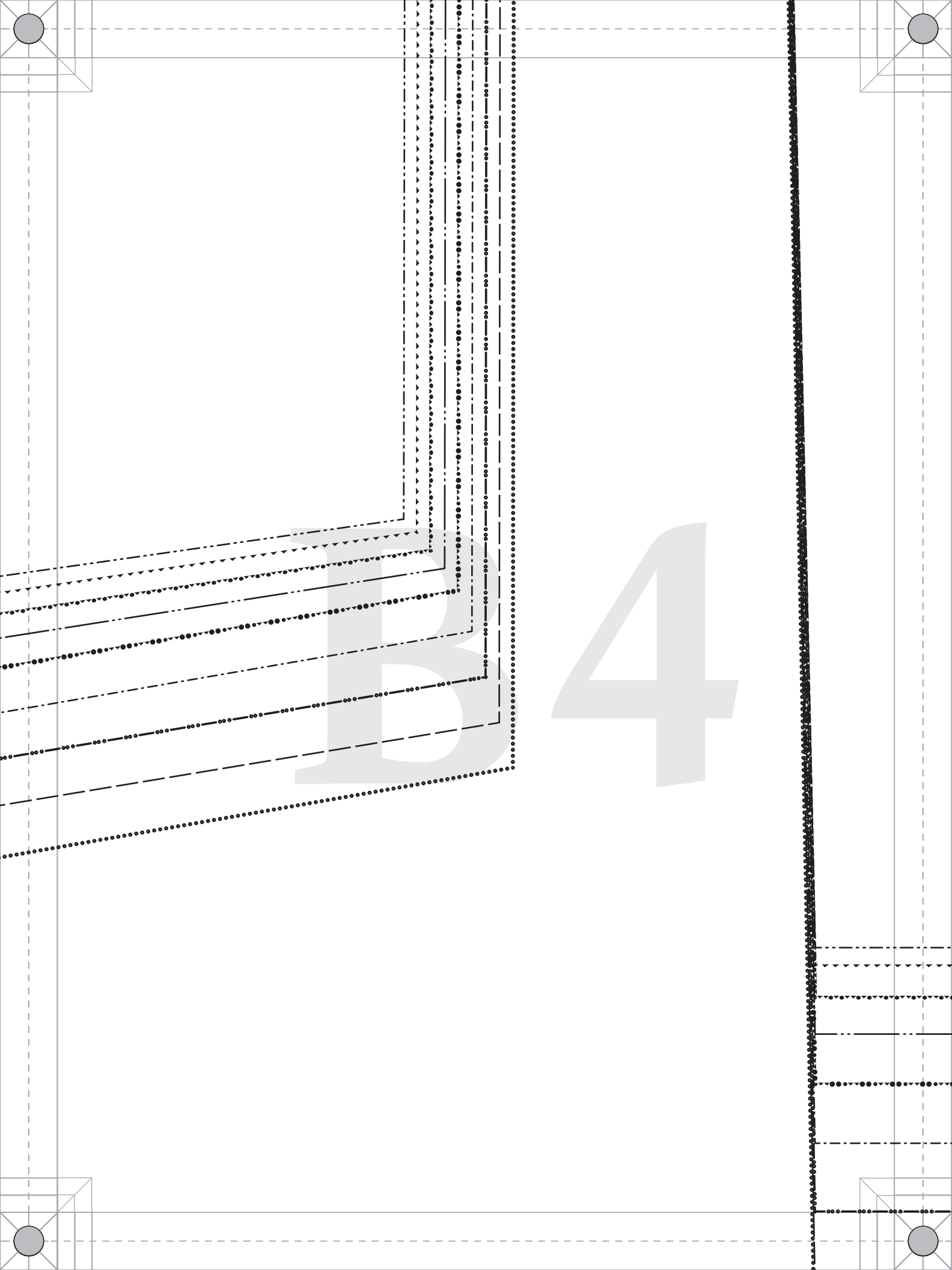
B4

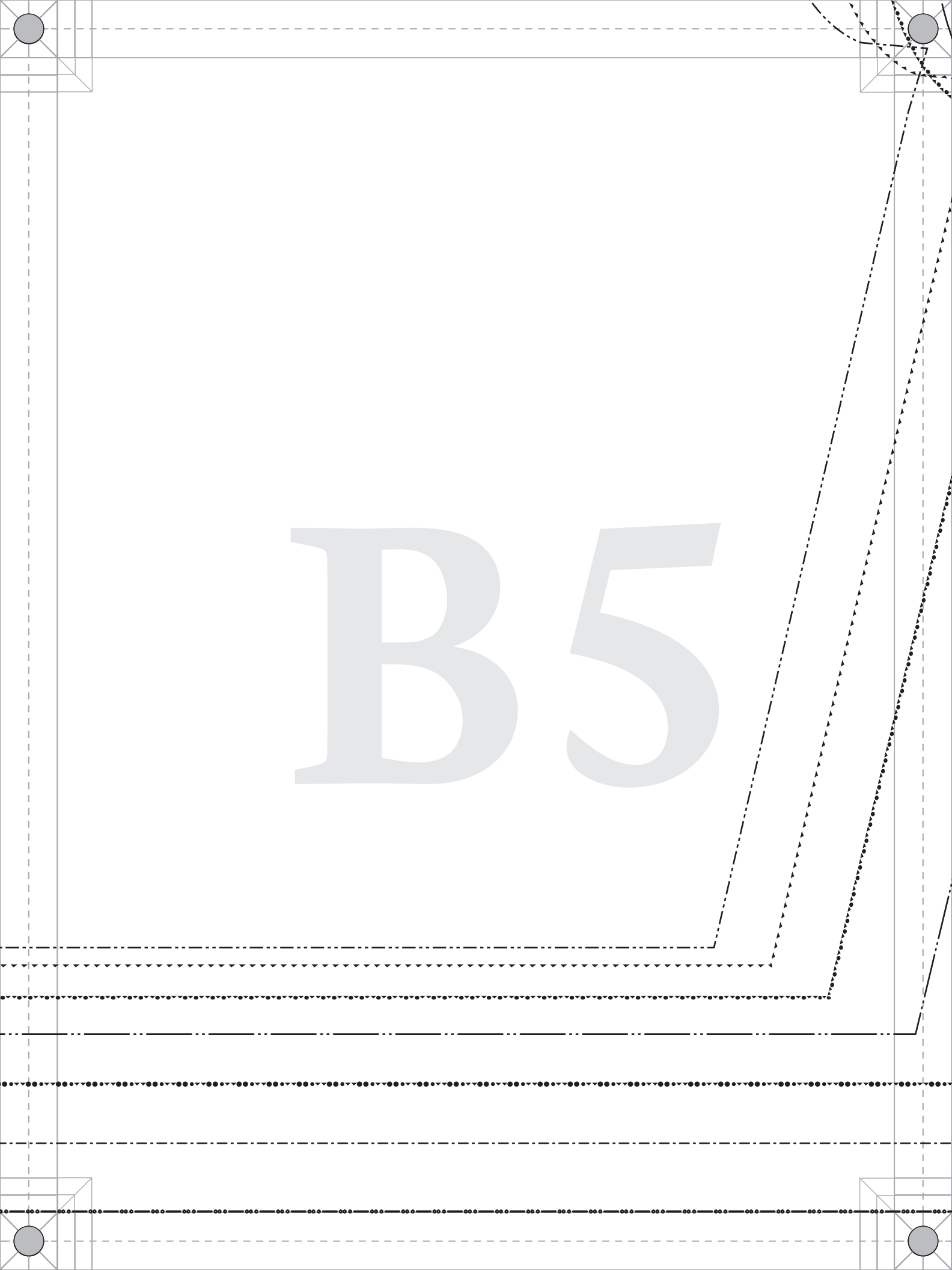
B5

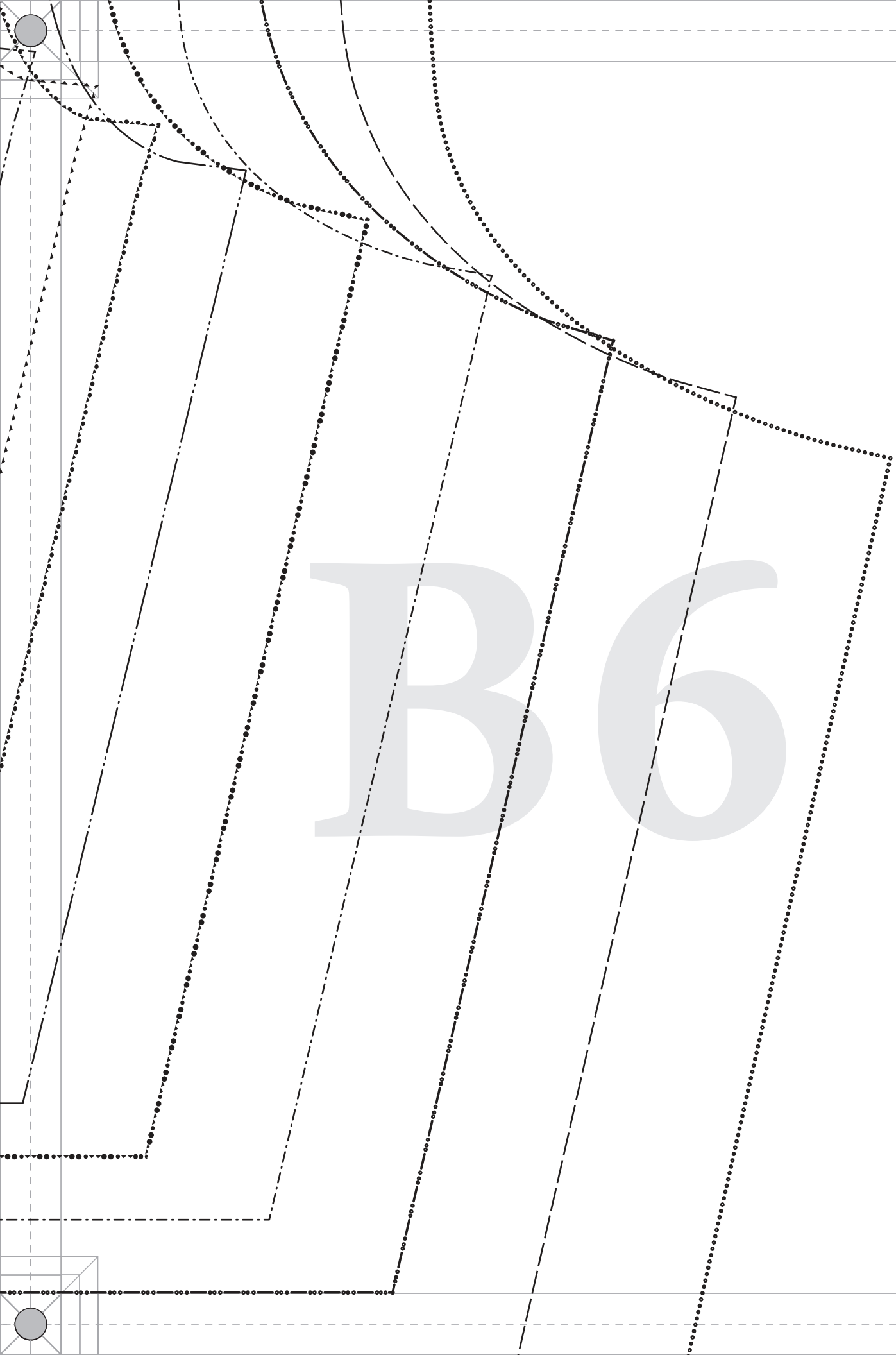
B6

C1

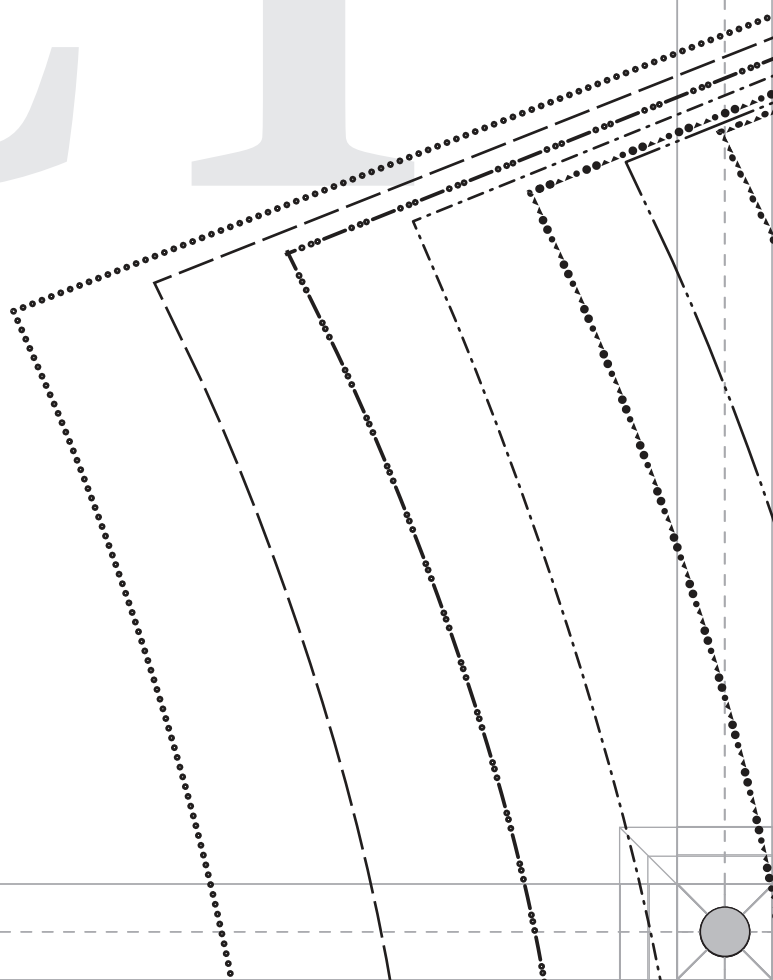

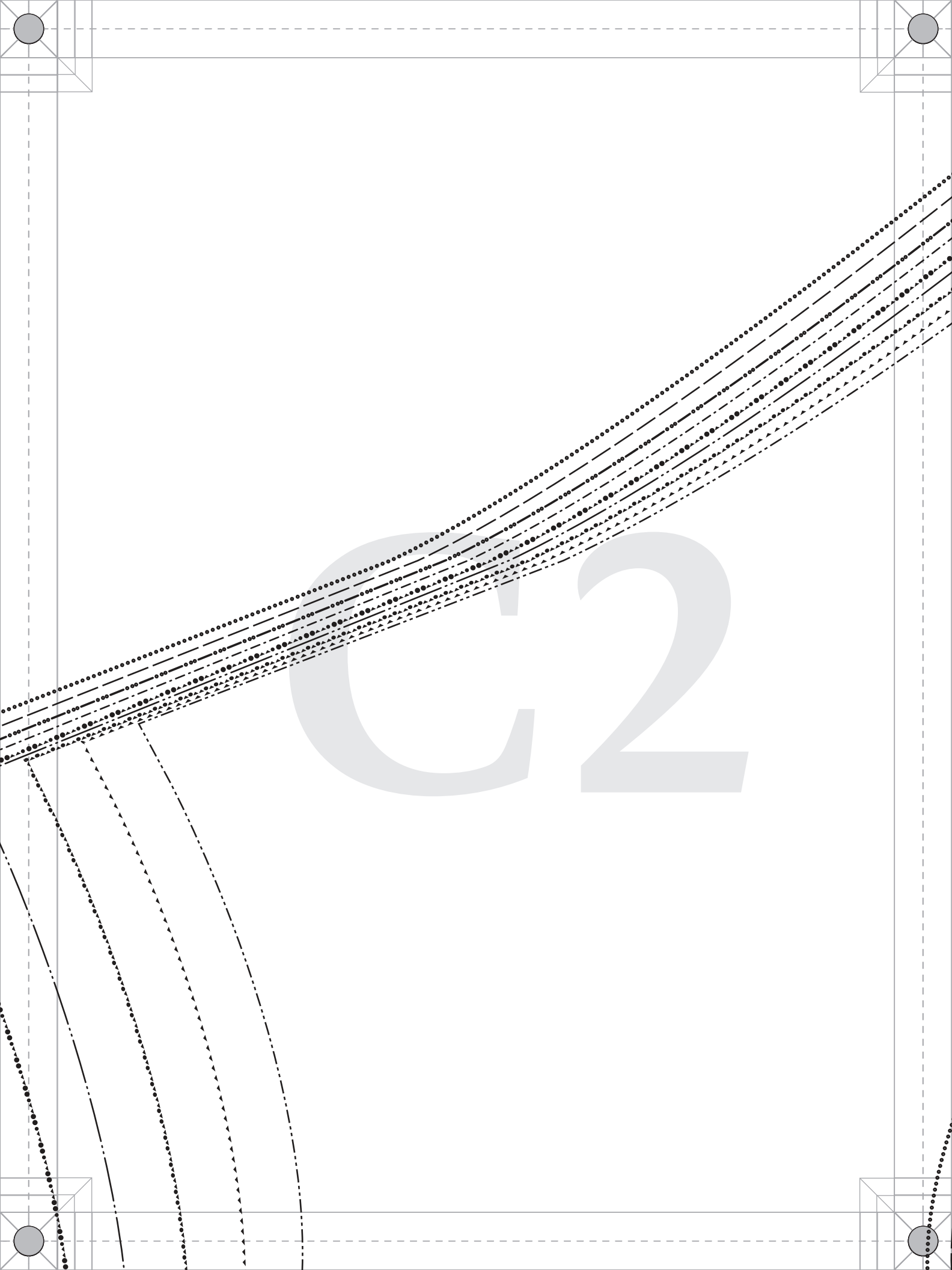
C2

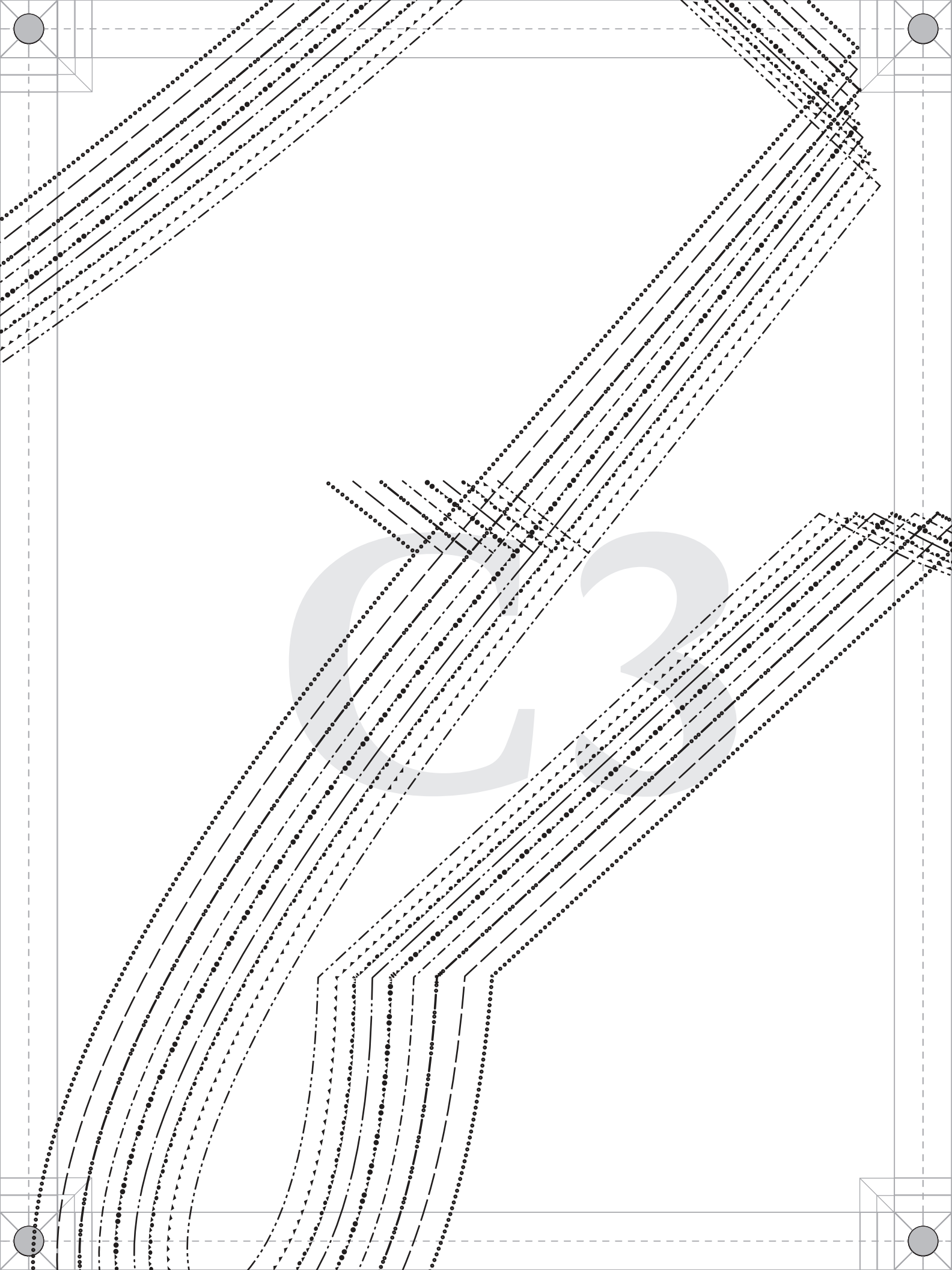

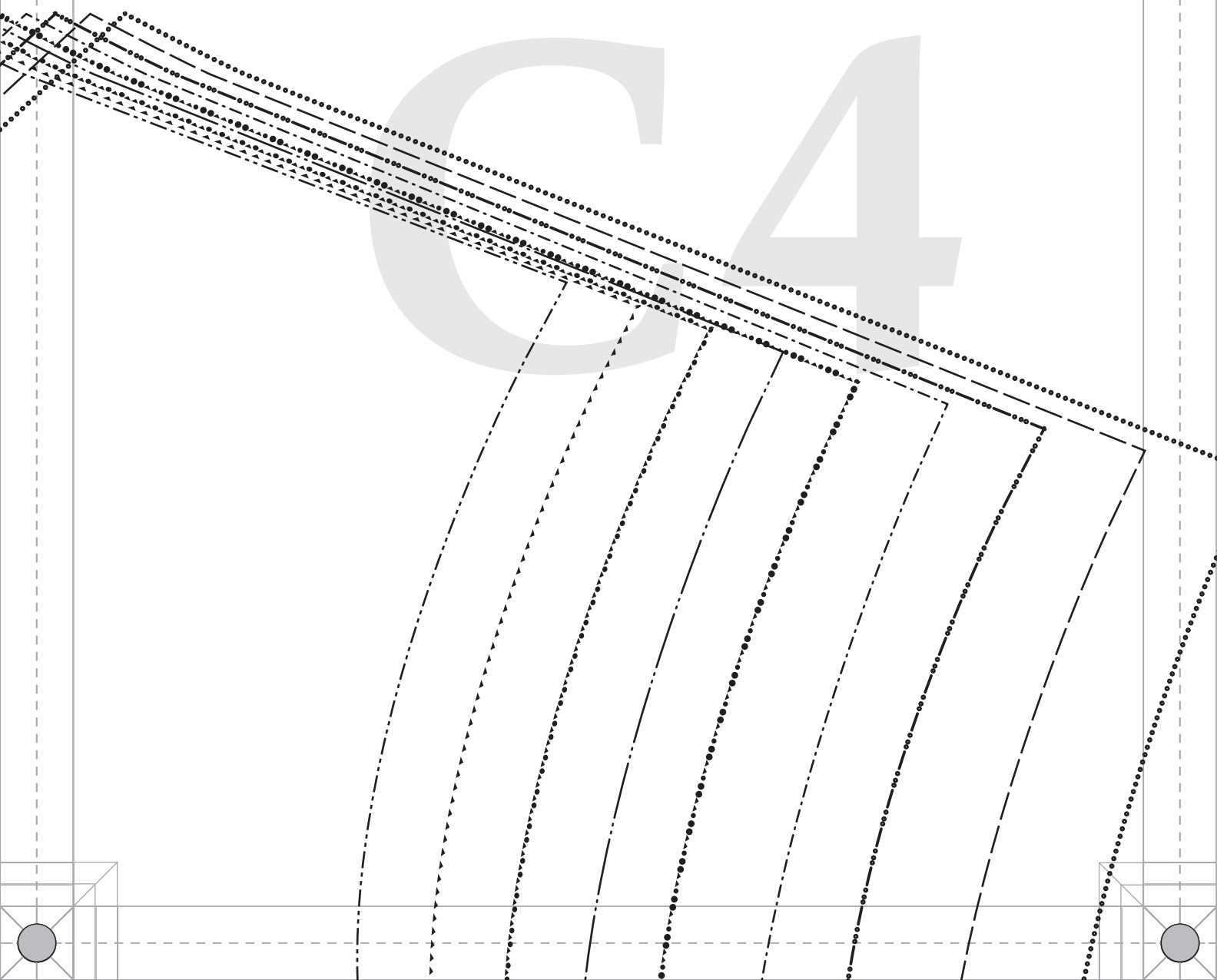
C4


PATTERNS
BY
mood
FABRICS
MDF496
#MoodTopekaPattern
"The Topeka Keyhole Dress"
MDF496
GRAINLINE

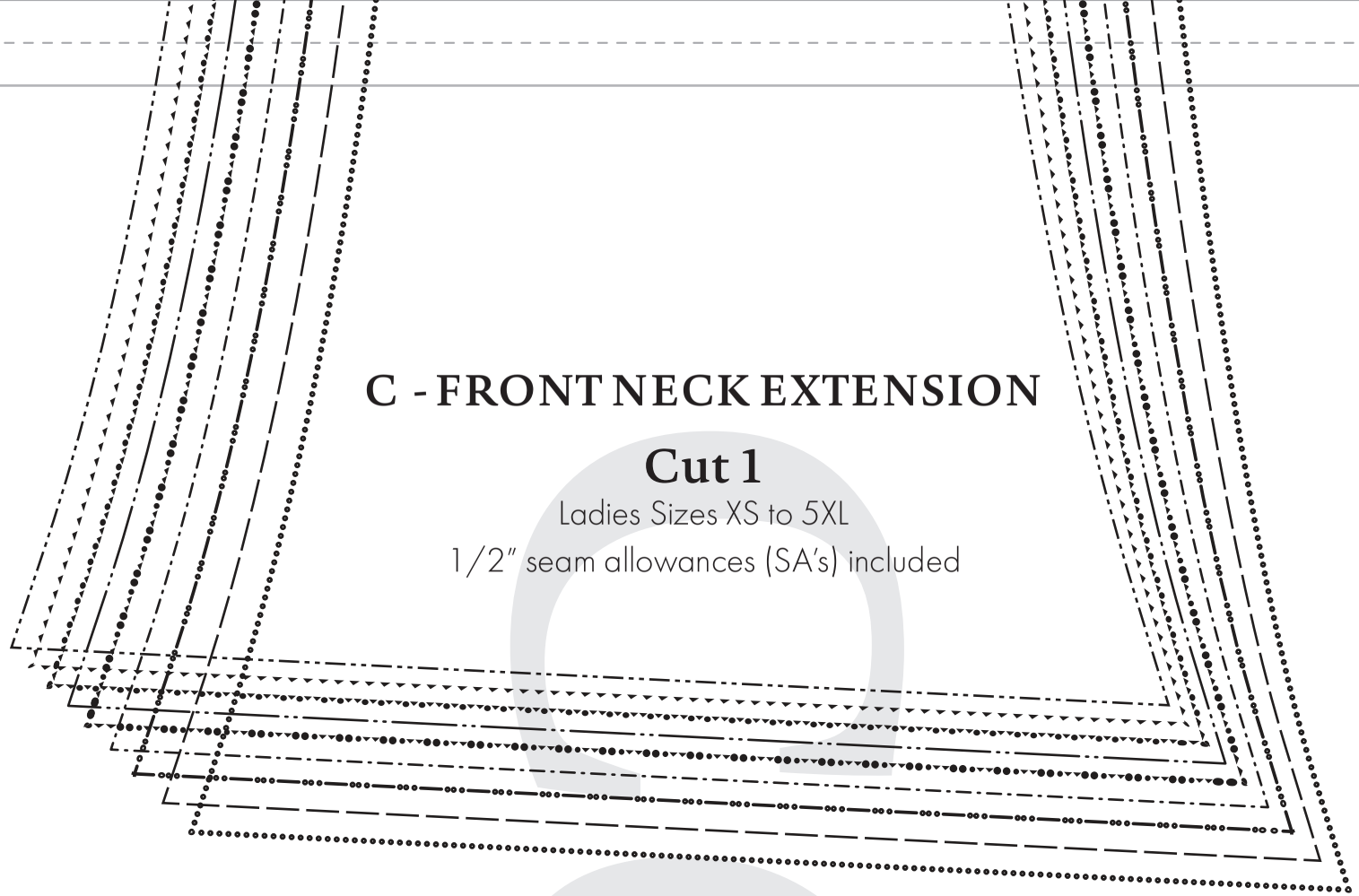

C - FRONT NECK EXTENSION

Cut 1

Ladies Sizes XS to 5XL

1/2" seam allowances (SA's) included

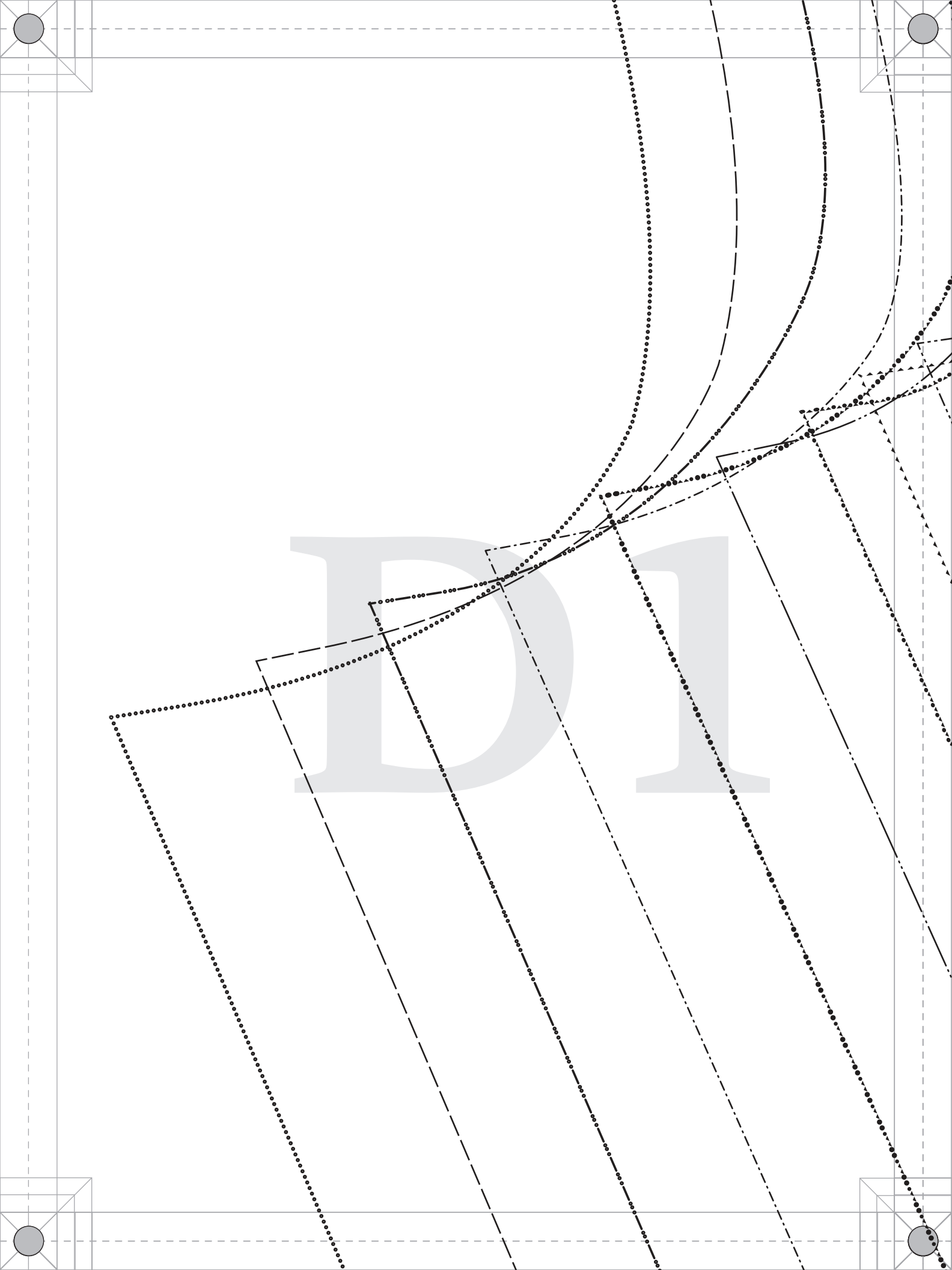

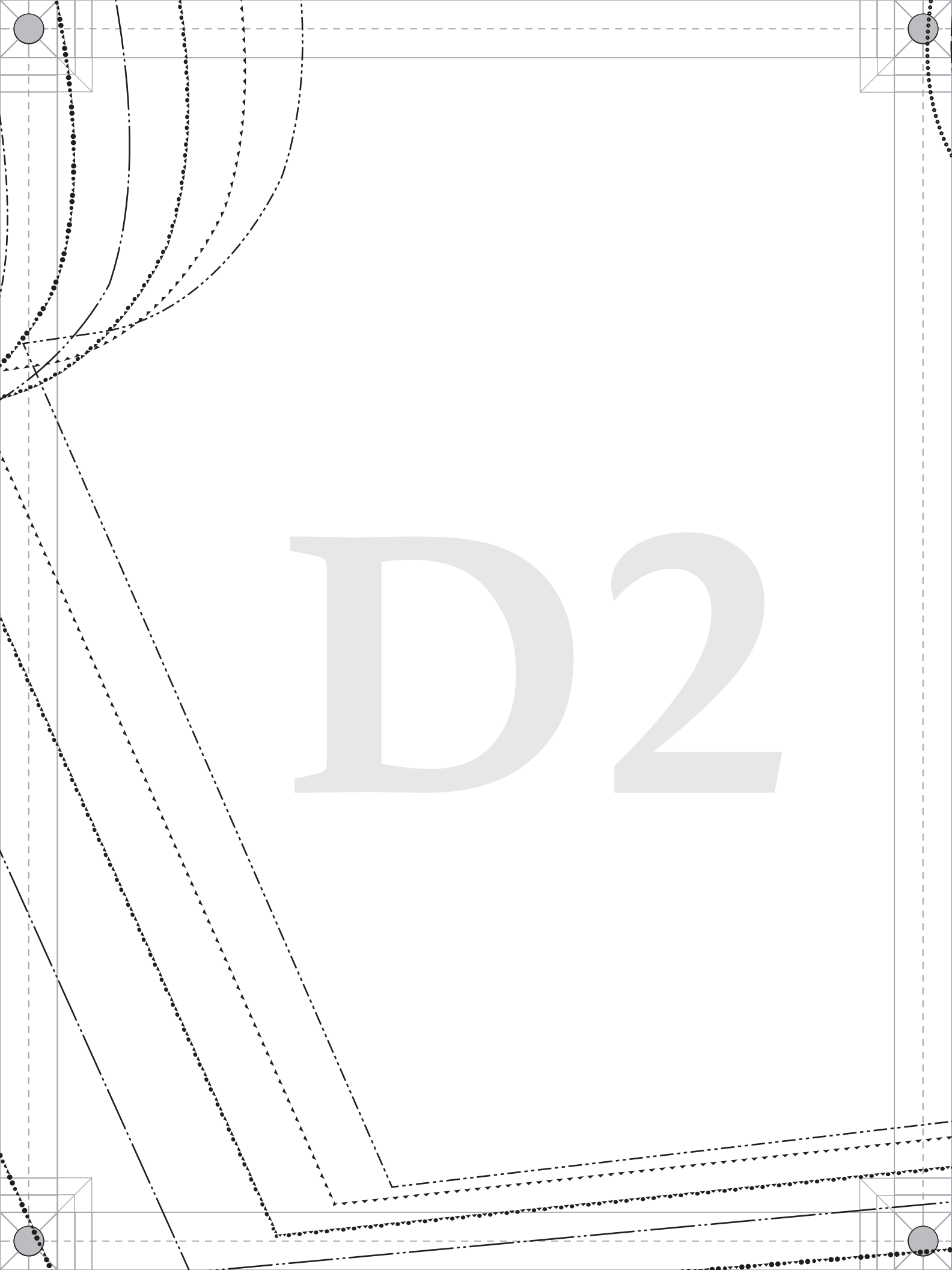
D2

PATTERNS BY mood FABRICS MDF496

#MoodTopekaPattern

"The Topeka Keyhole Dress" MDF496

B - TOP FRONT

Cut 1

Ladies Sizes XS to 5XL

1/2" seam allowances (SA's) included



D3

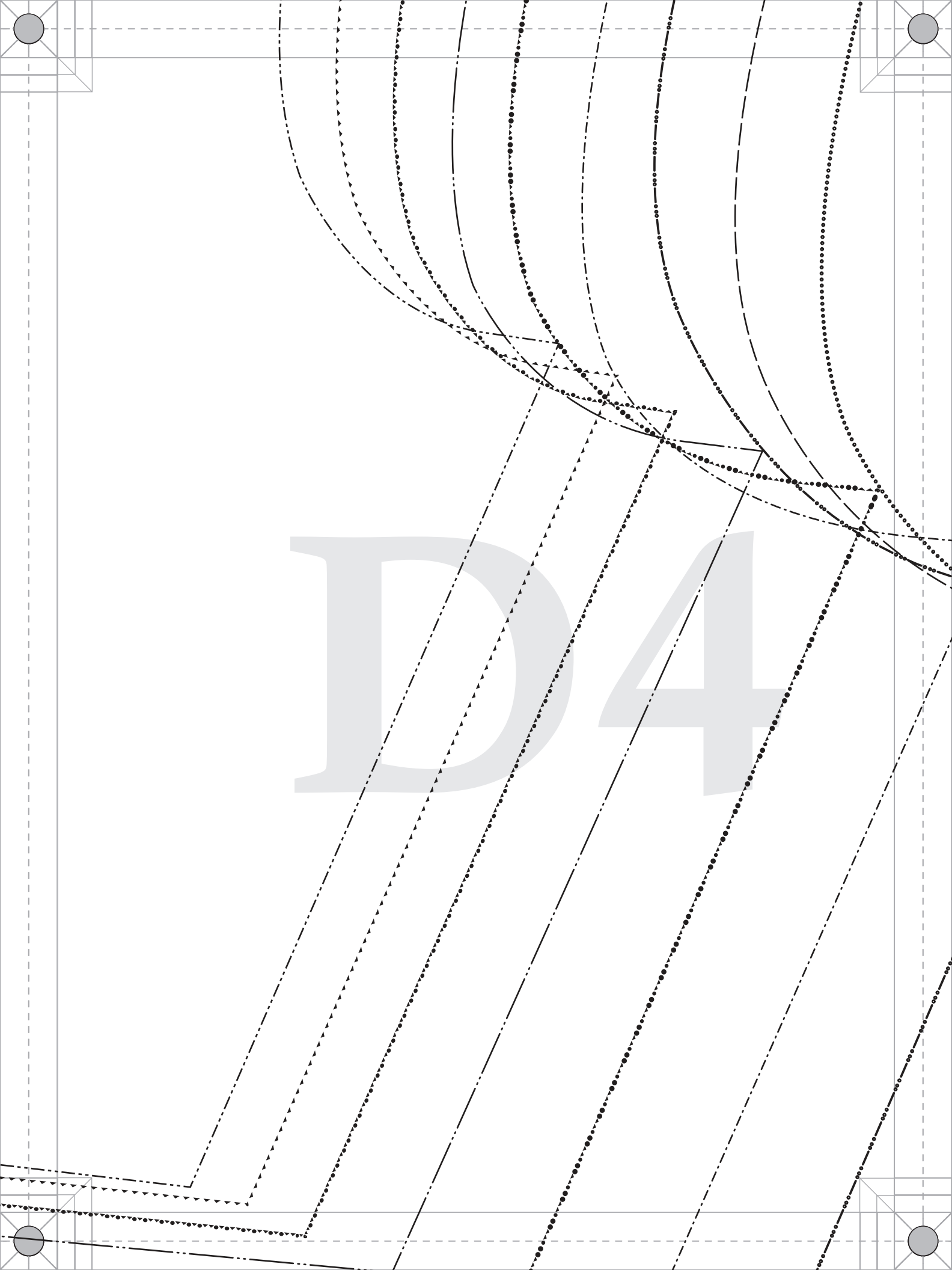
D4

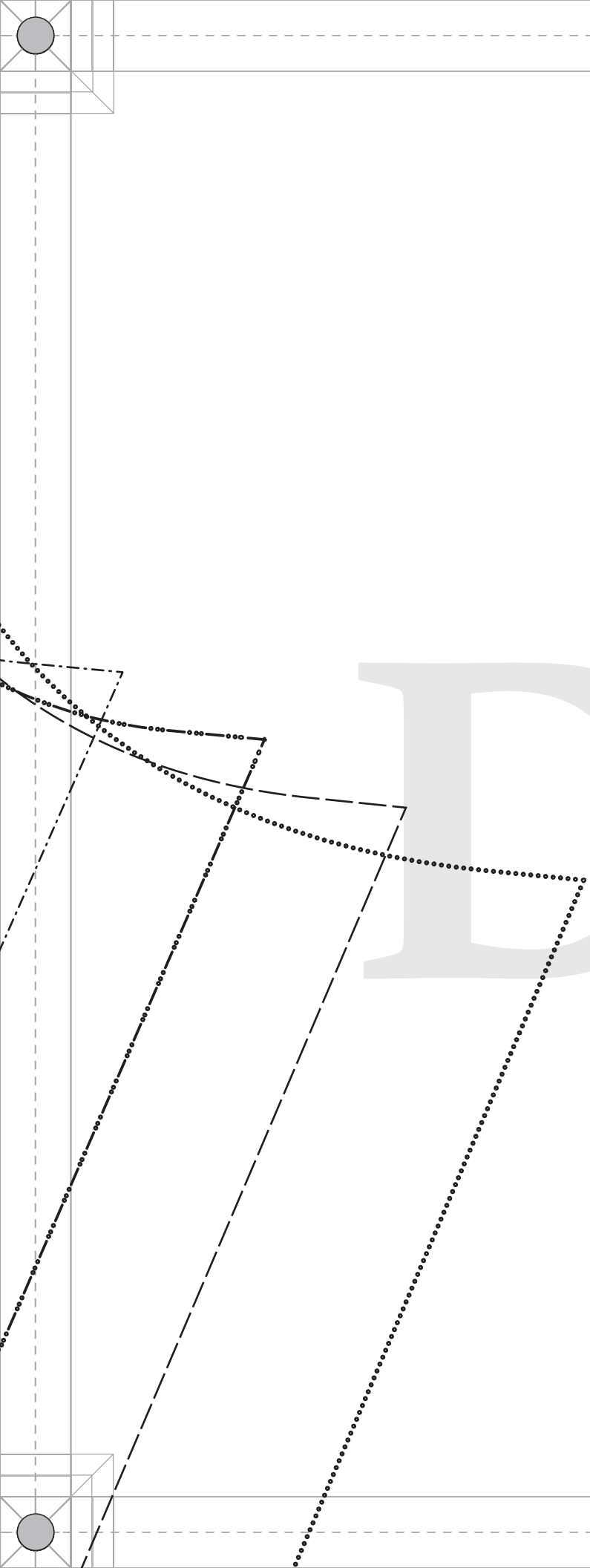

D5

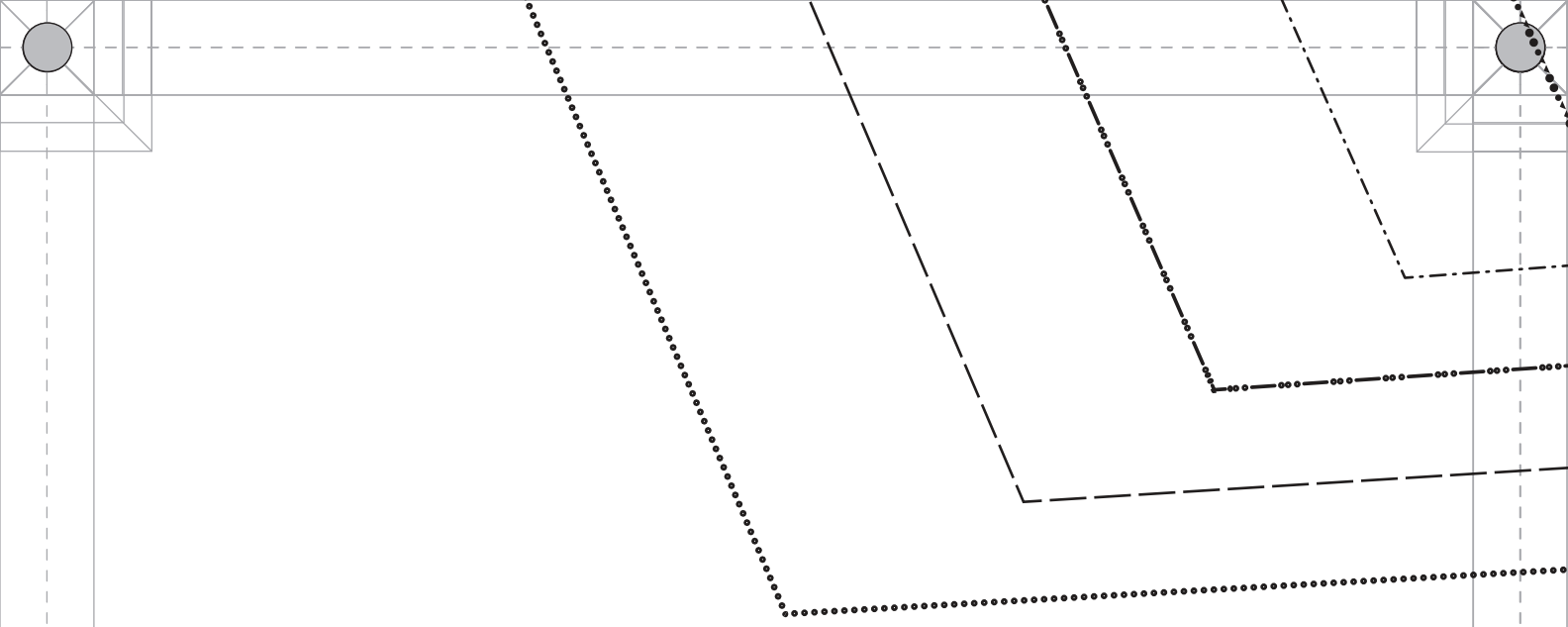

E1

PATTERNS BY mood FABRICS MDF496

#MoodTopekaPattern

"The Topeka Keyhole Dress" MDF496

D - SKIRT BACK

Cut 2 mirrored

Ladies Sizes XS to 5XL

1/2" seam allowances (SA's) included

GRAINLINE

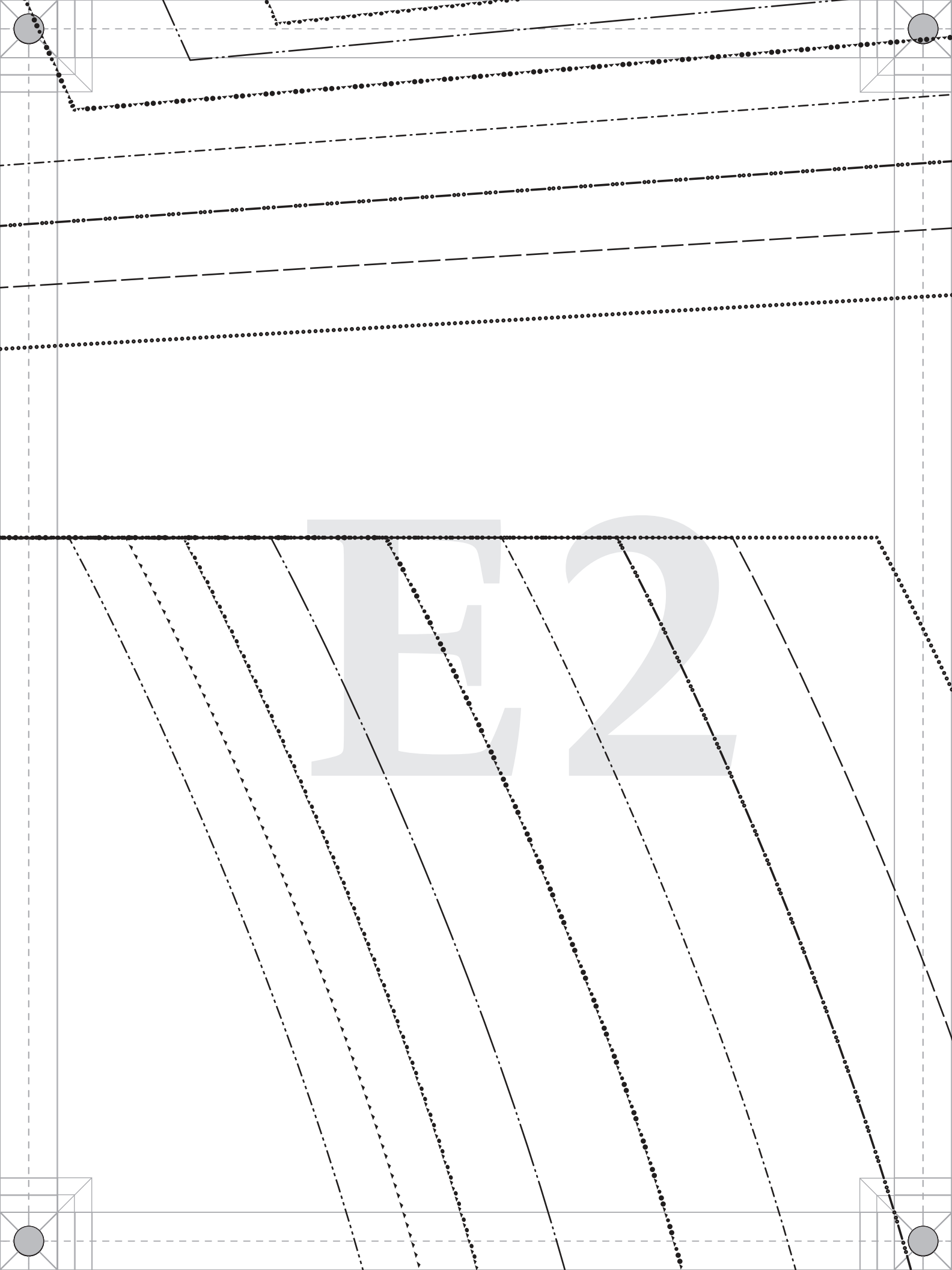
E2

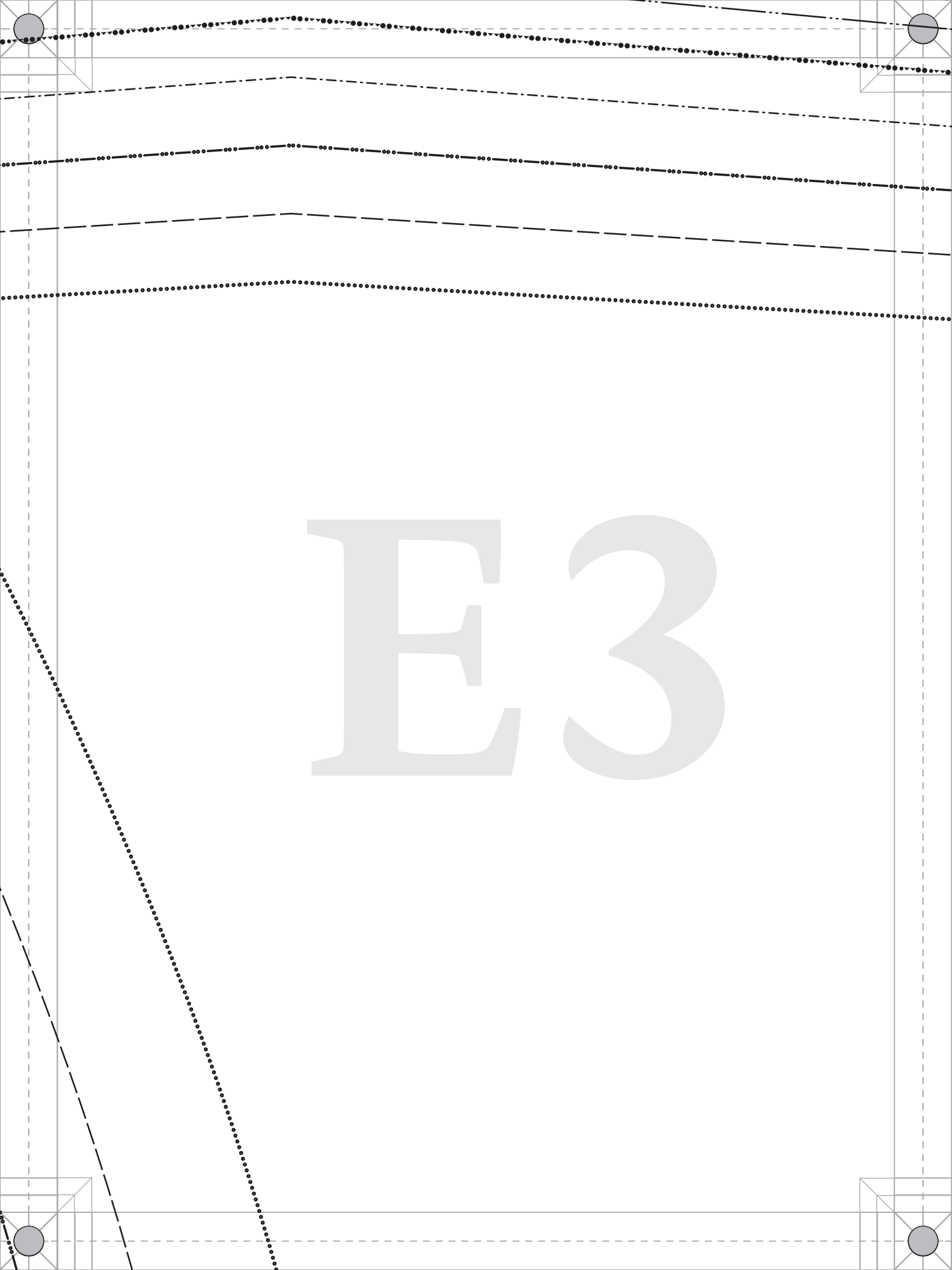
E3

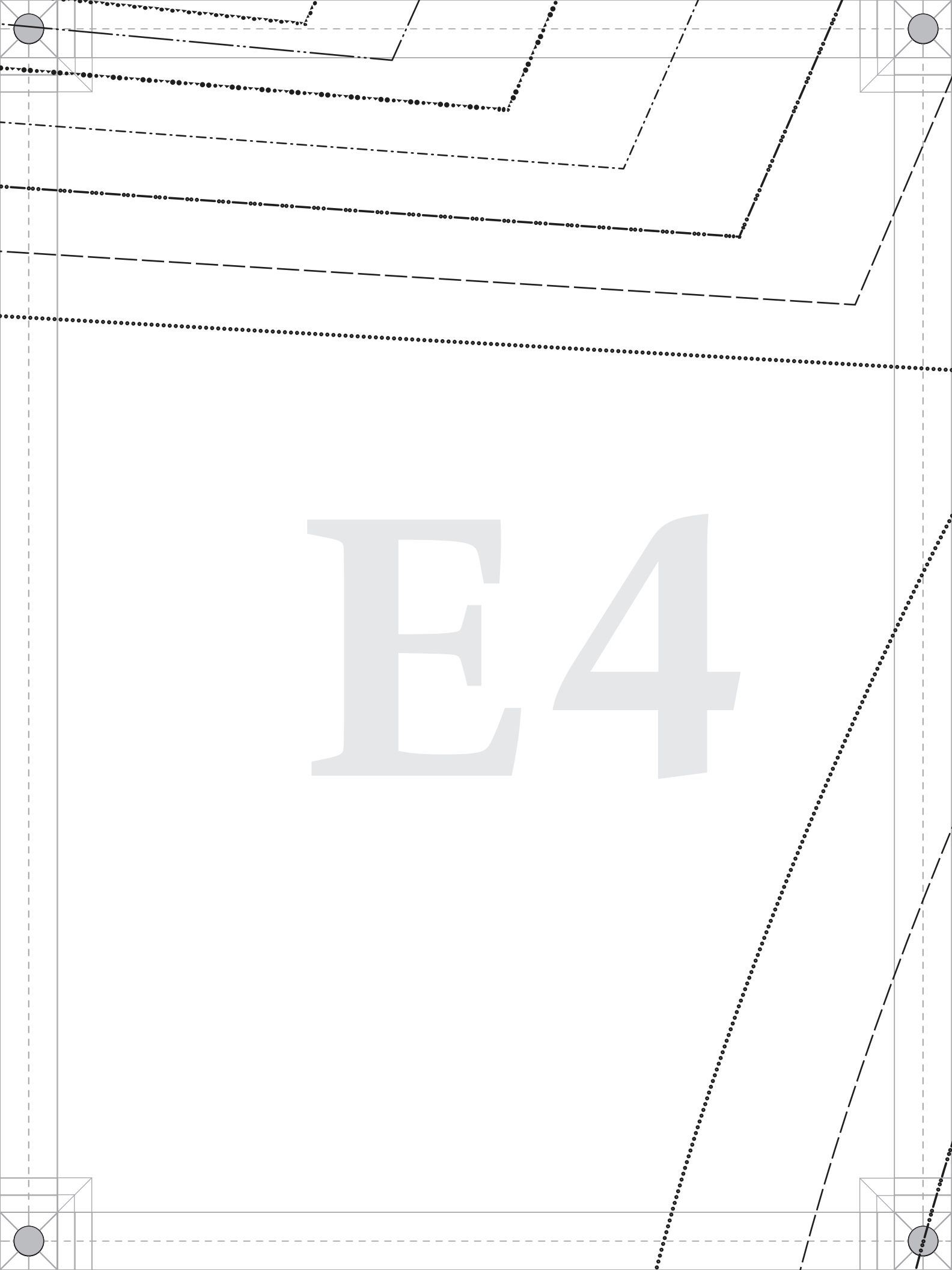
E4

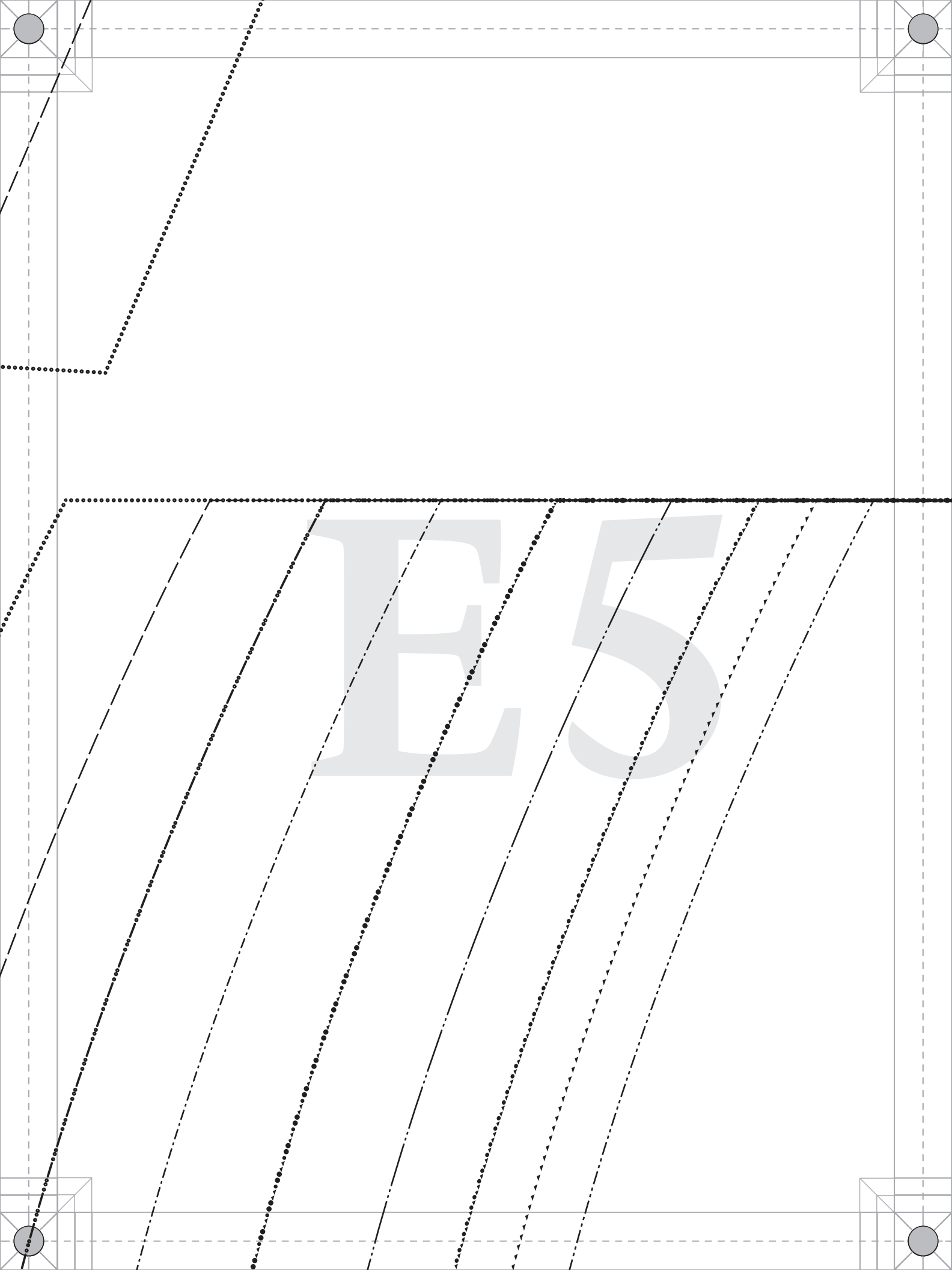

PATTERNS BY mood FABRICS MDF496

#MoodTopekaPattern

"The Topeka Keyhole Dress" MDF496

E - SKIRT FRONT

Cut 1 on fold

Ladies Sizes XS to 5XL

1/2" seam allowances (SA's) included



F1

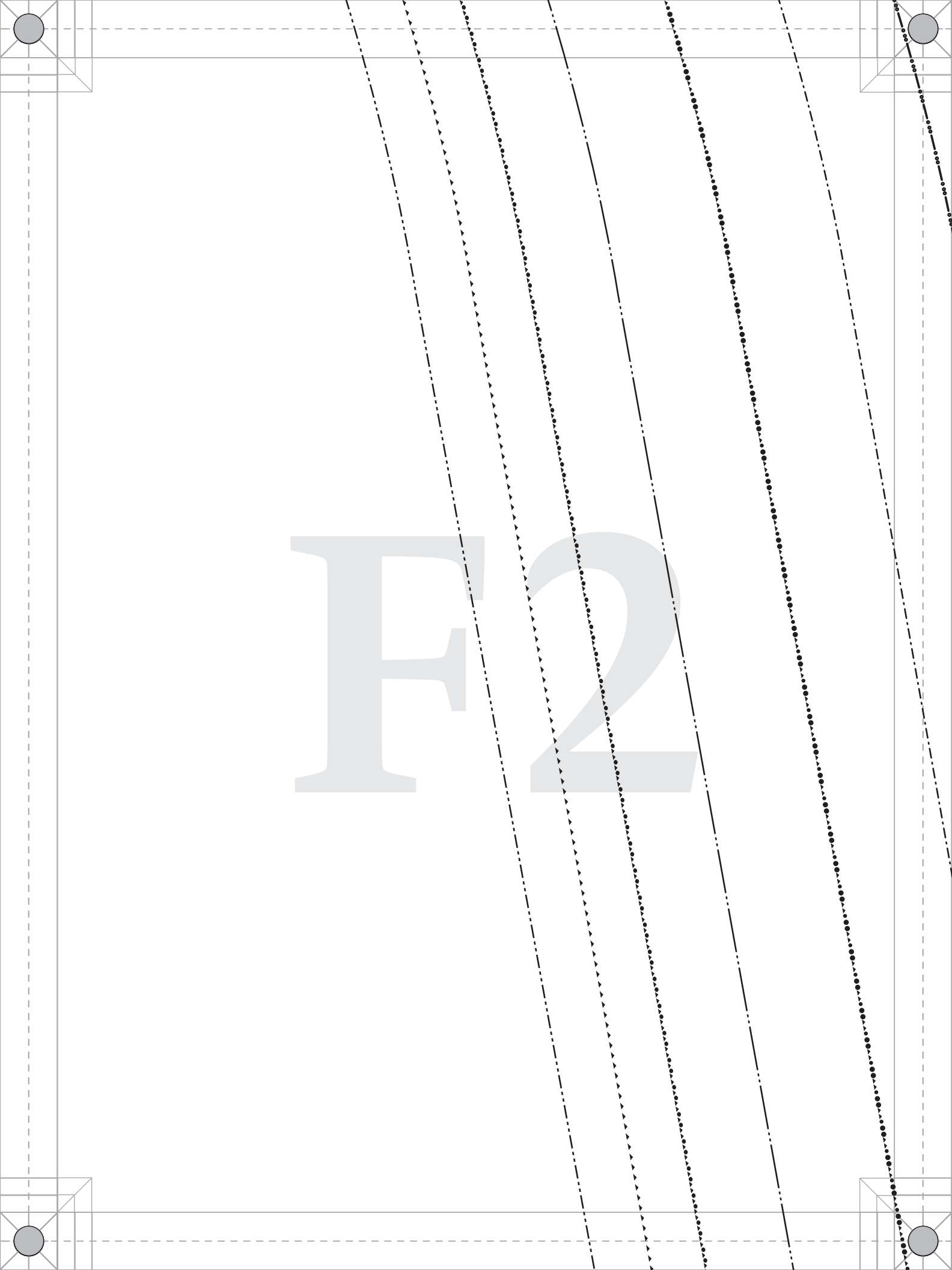
F2

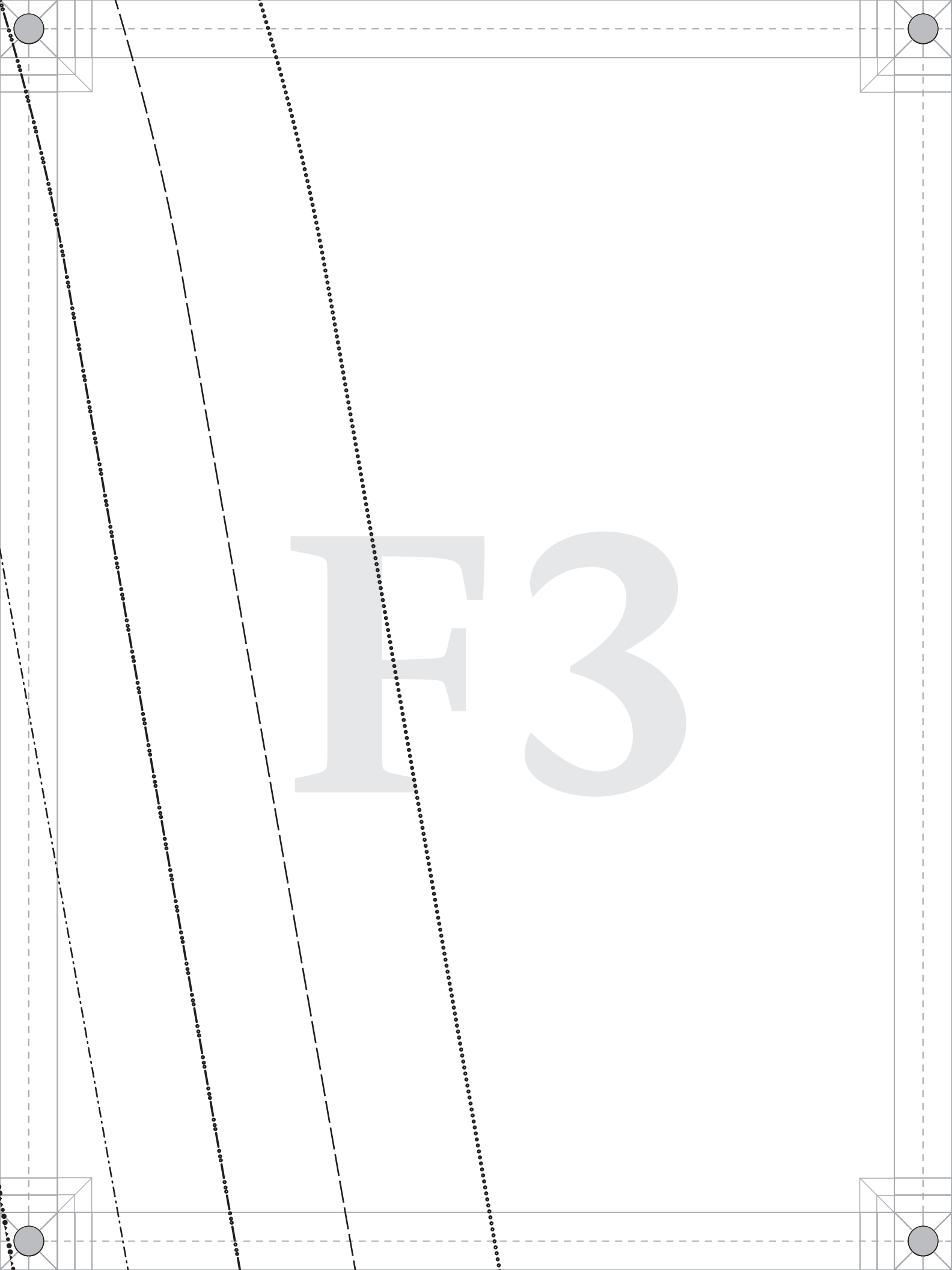
F3

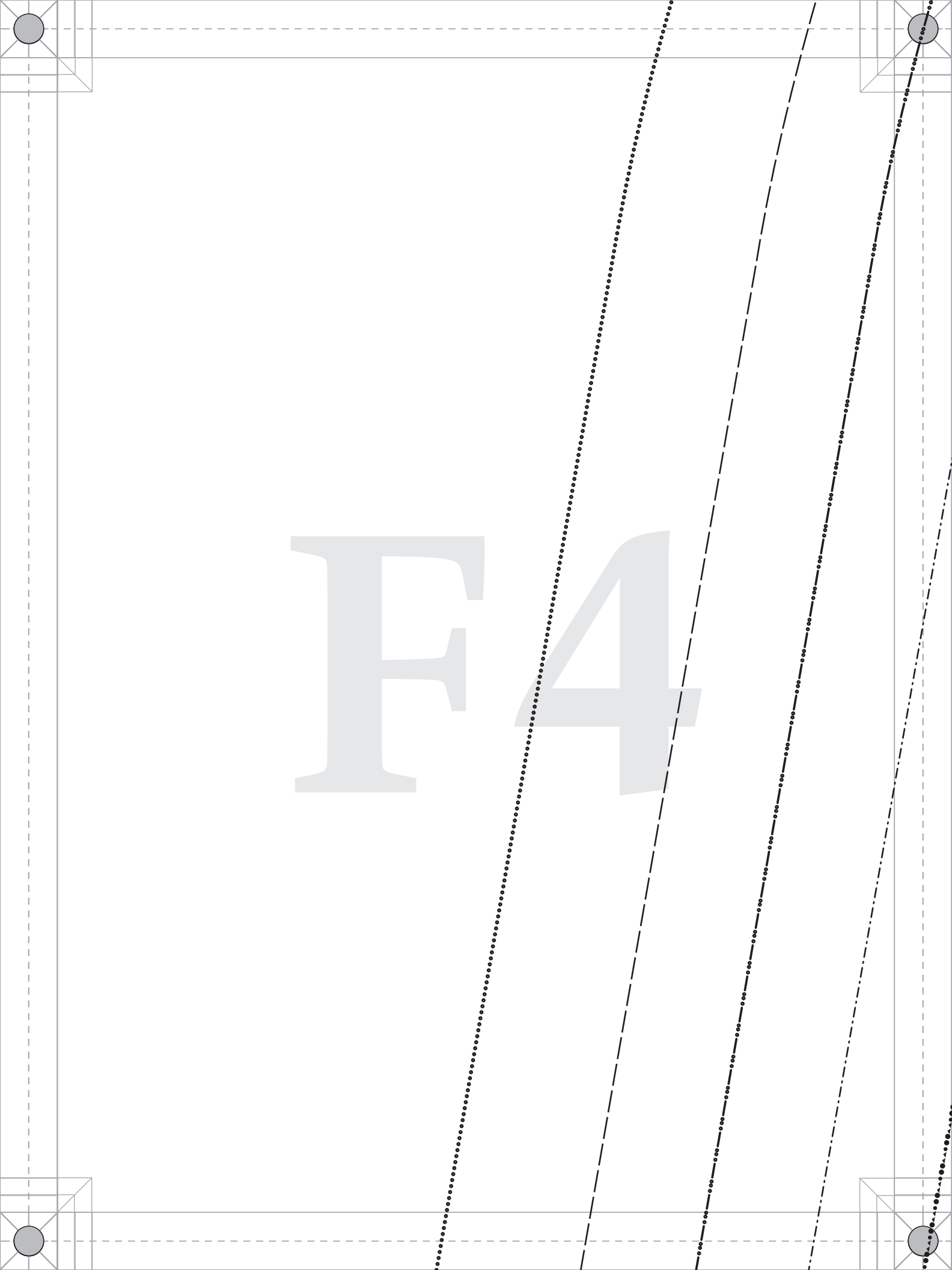
F4

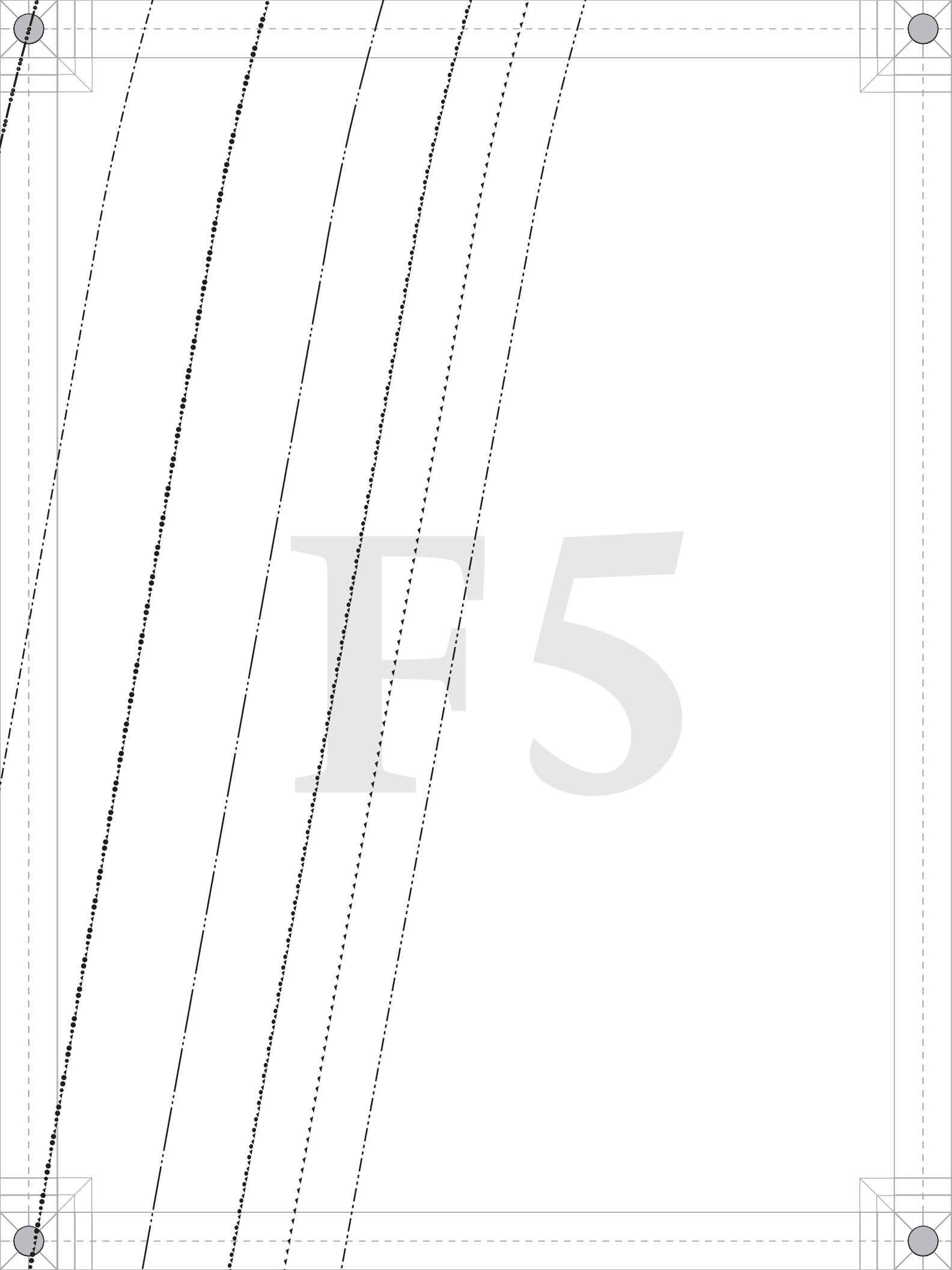
F5

F6

G1

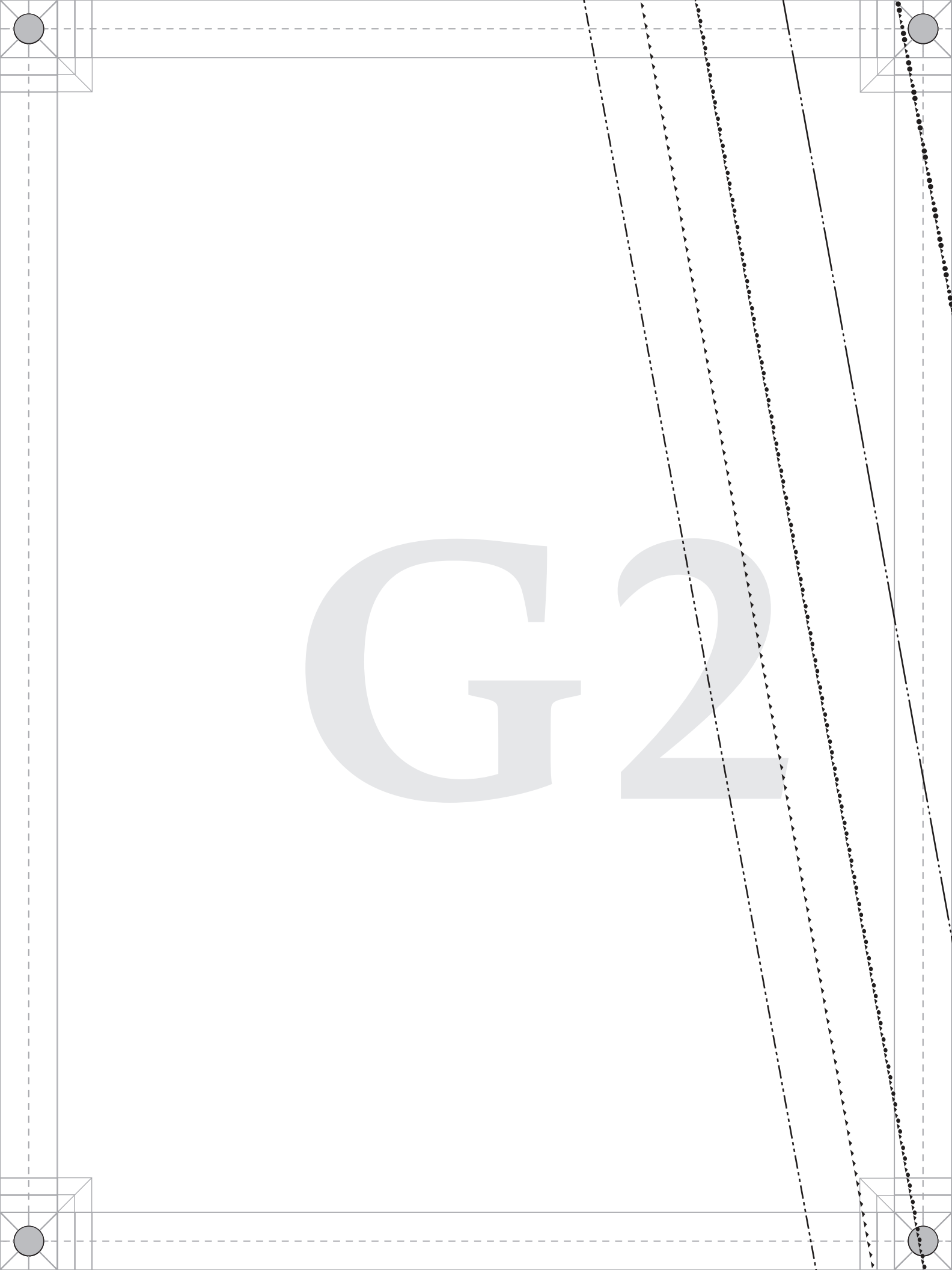
G2

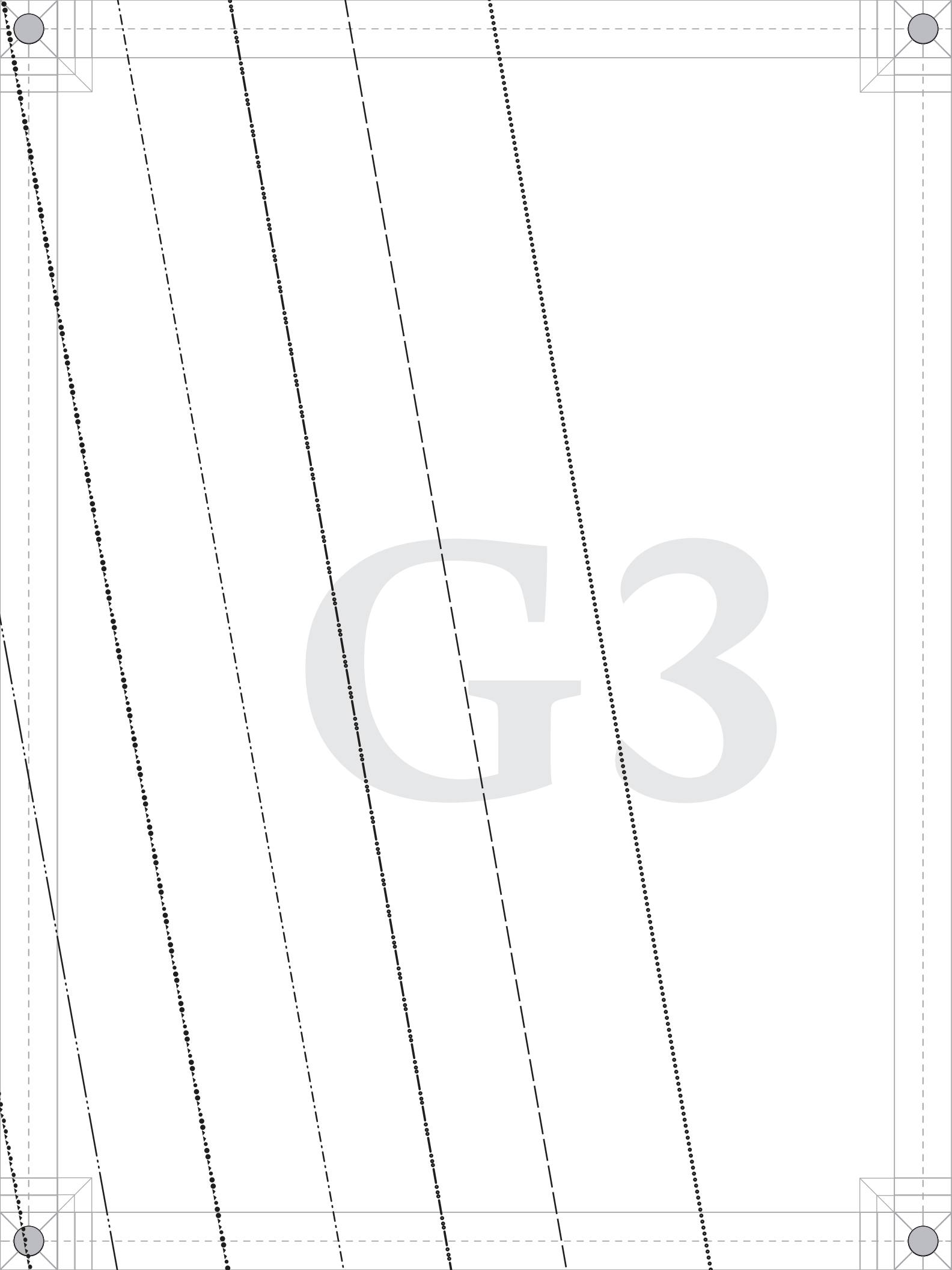
G3

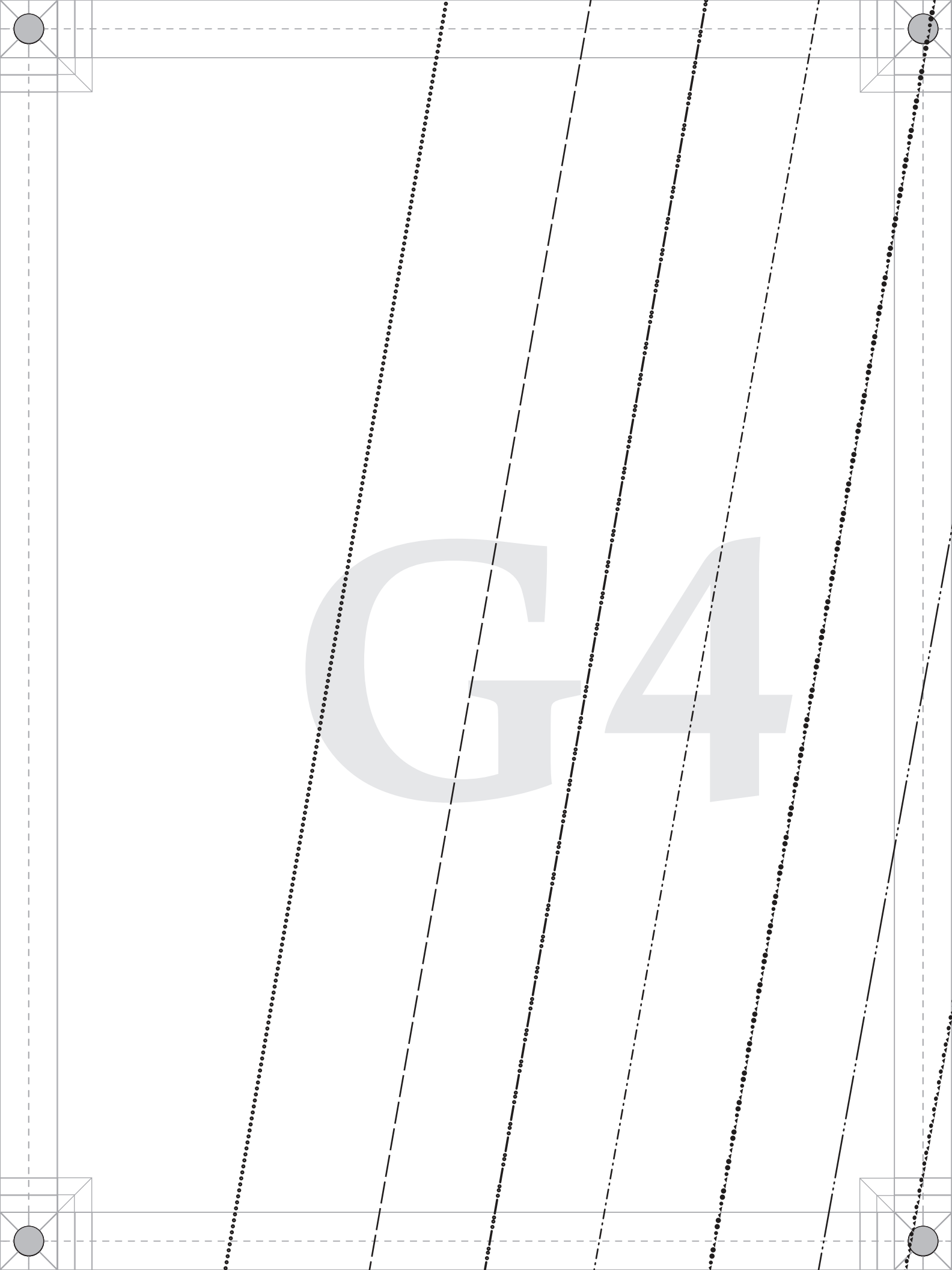
G4

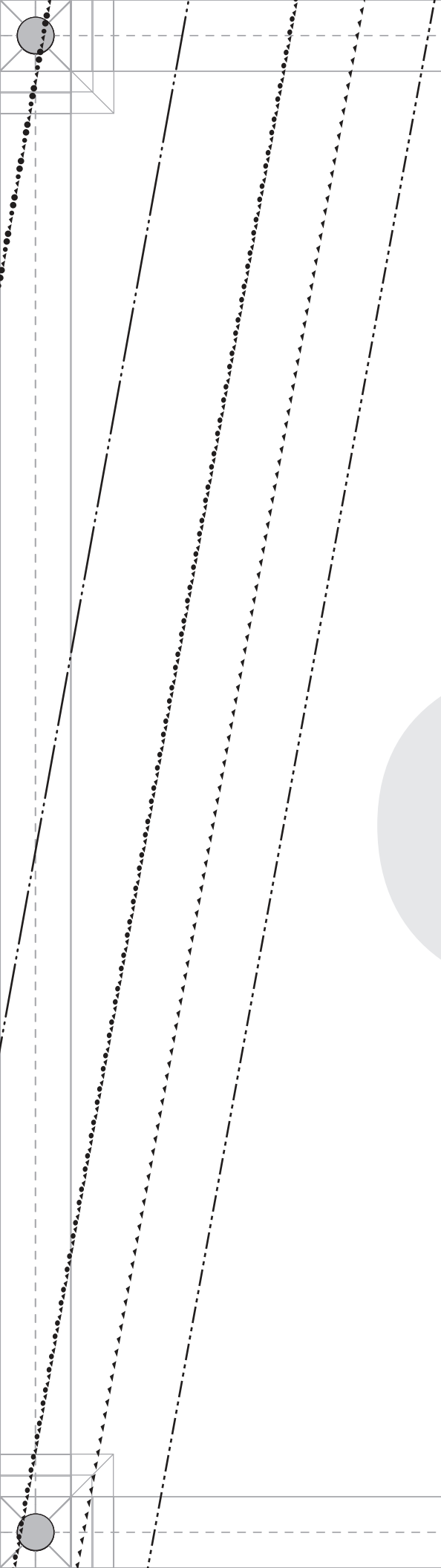

G5

G6

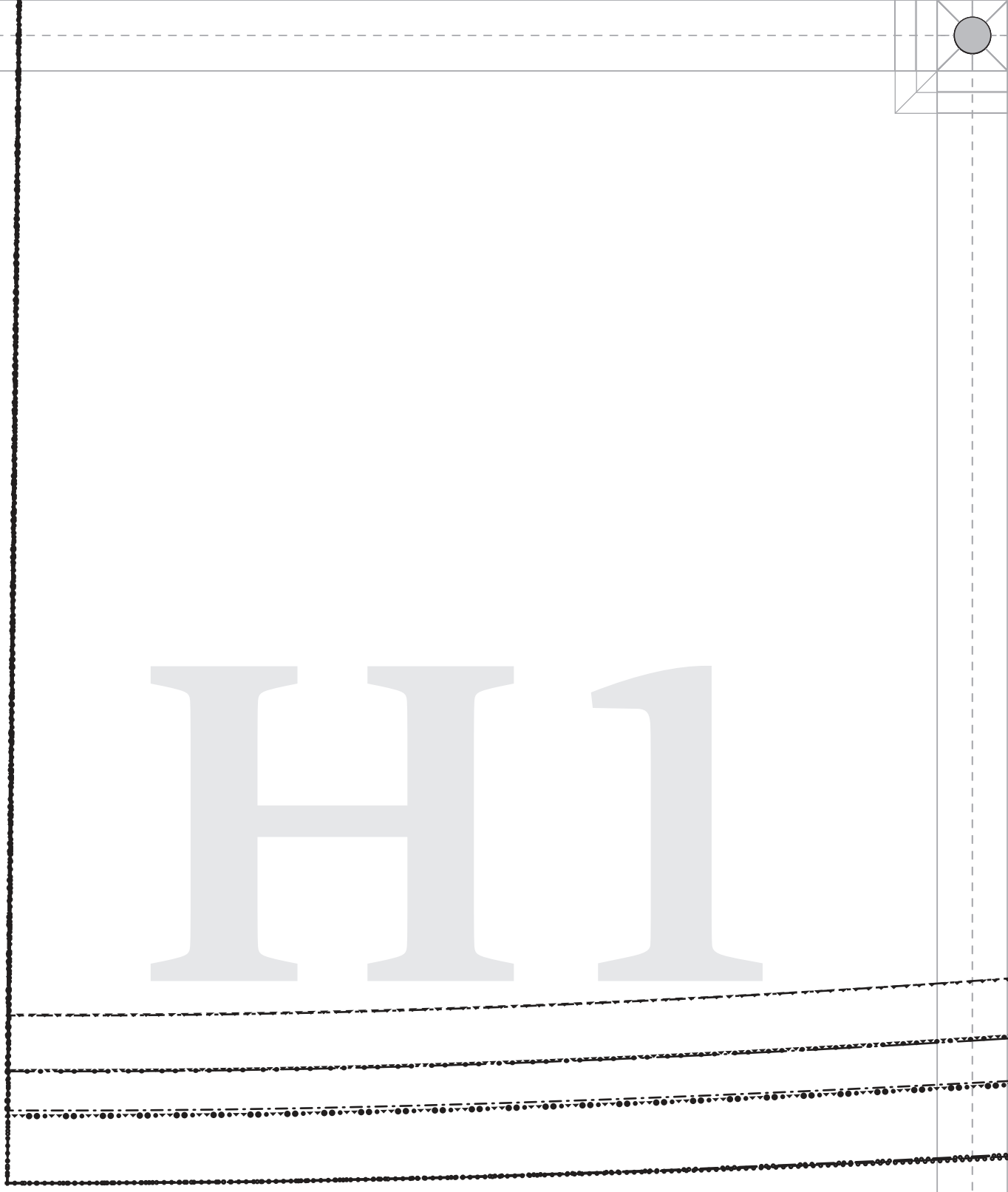
H1

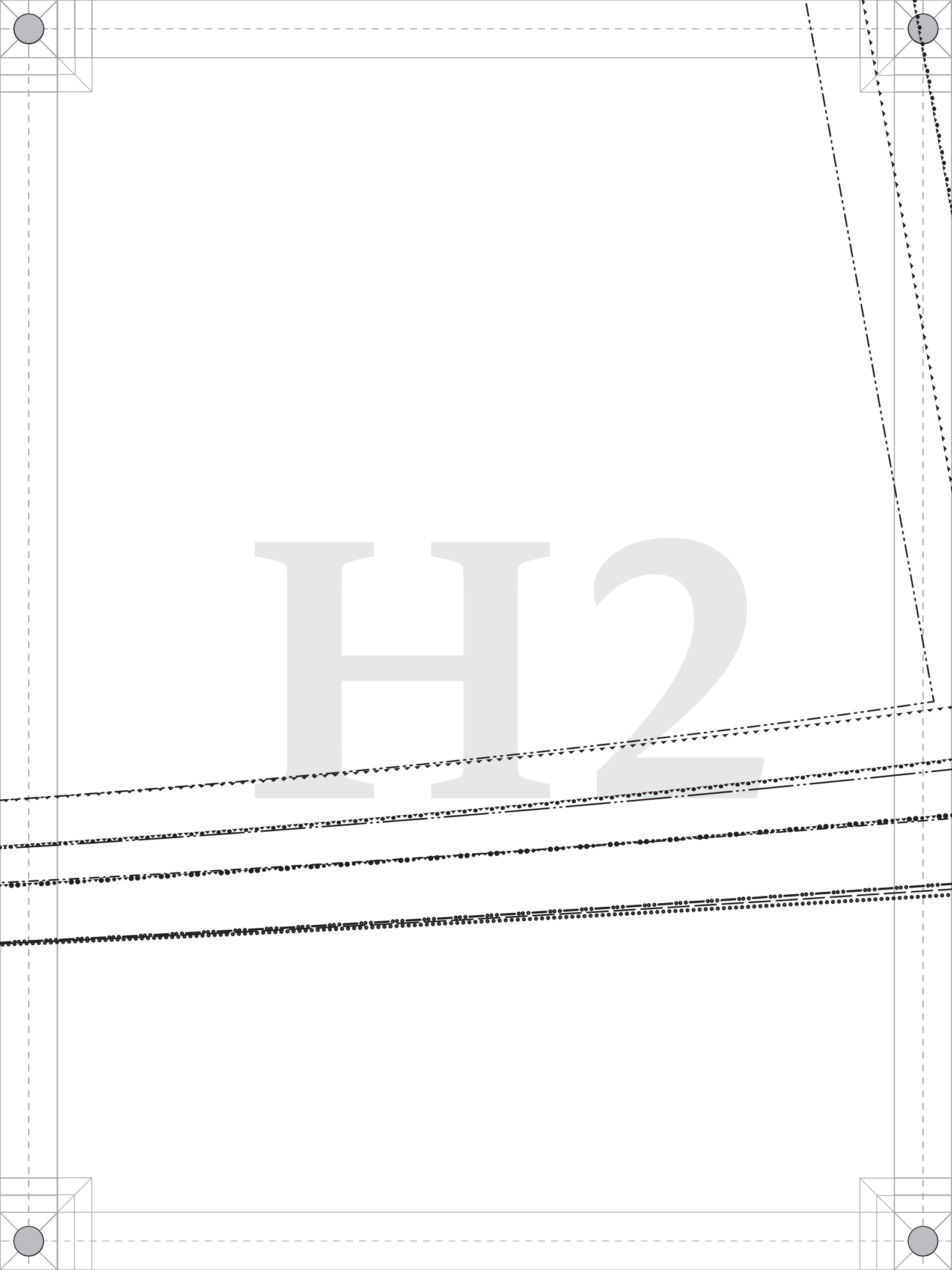
H2

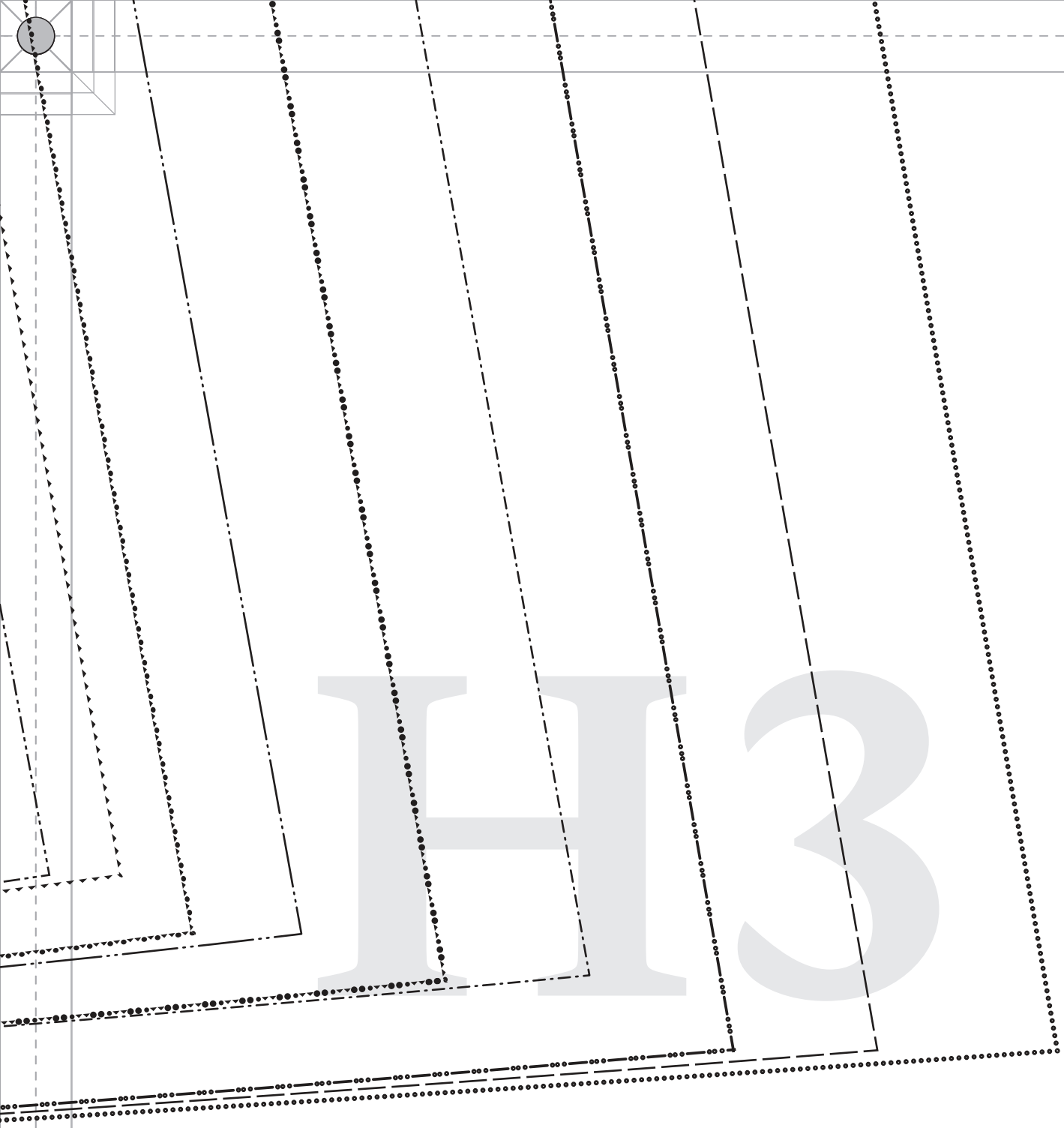
H3

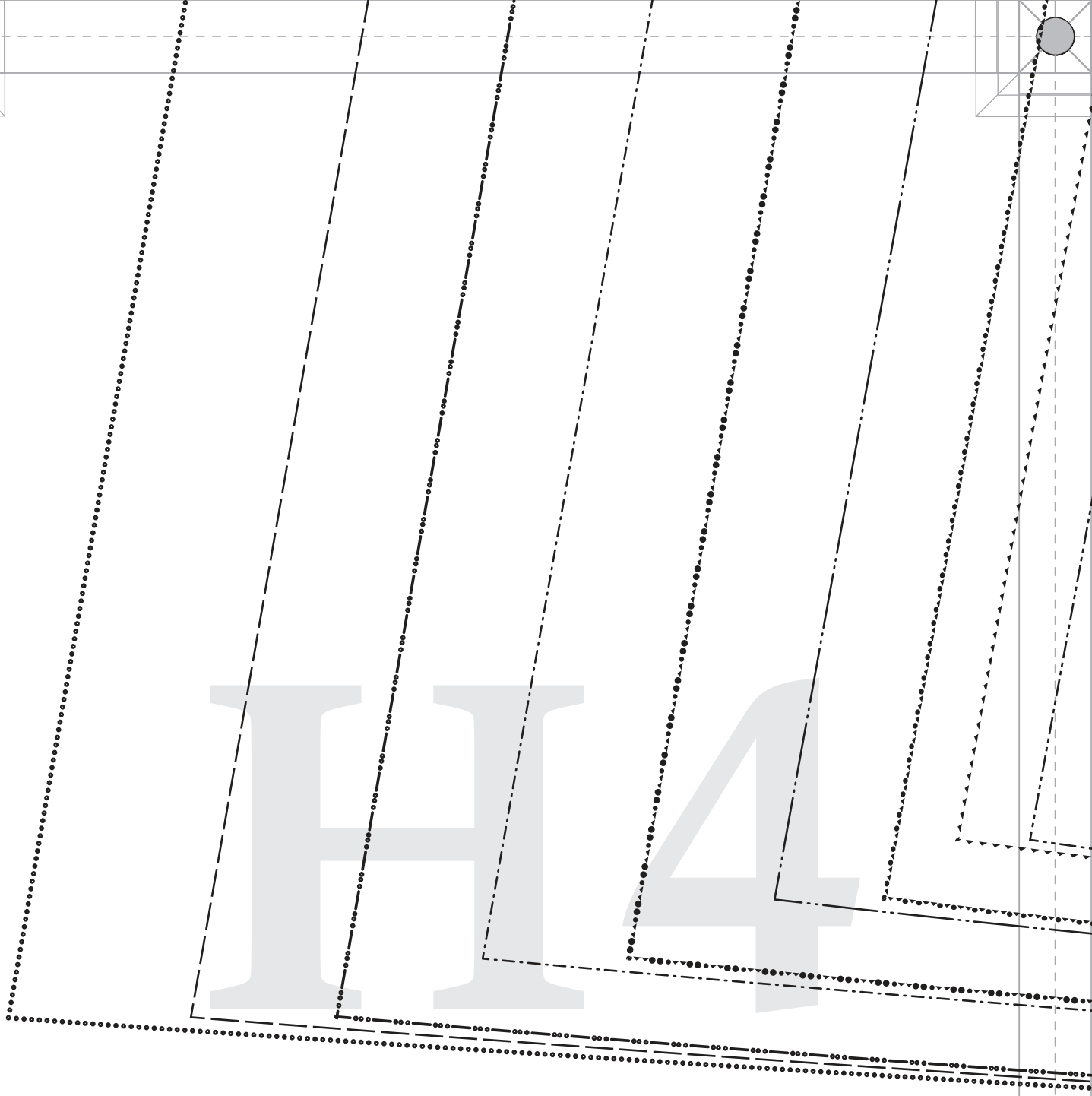
H4

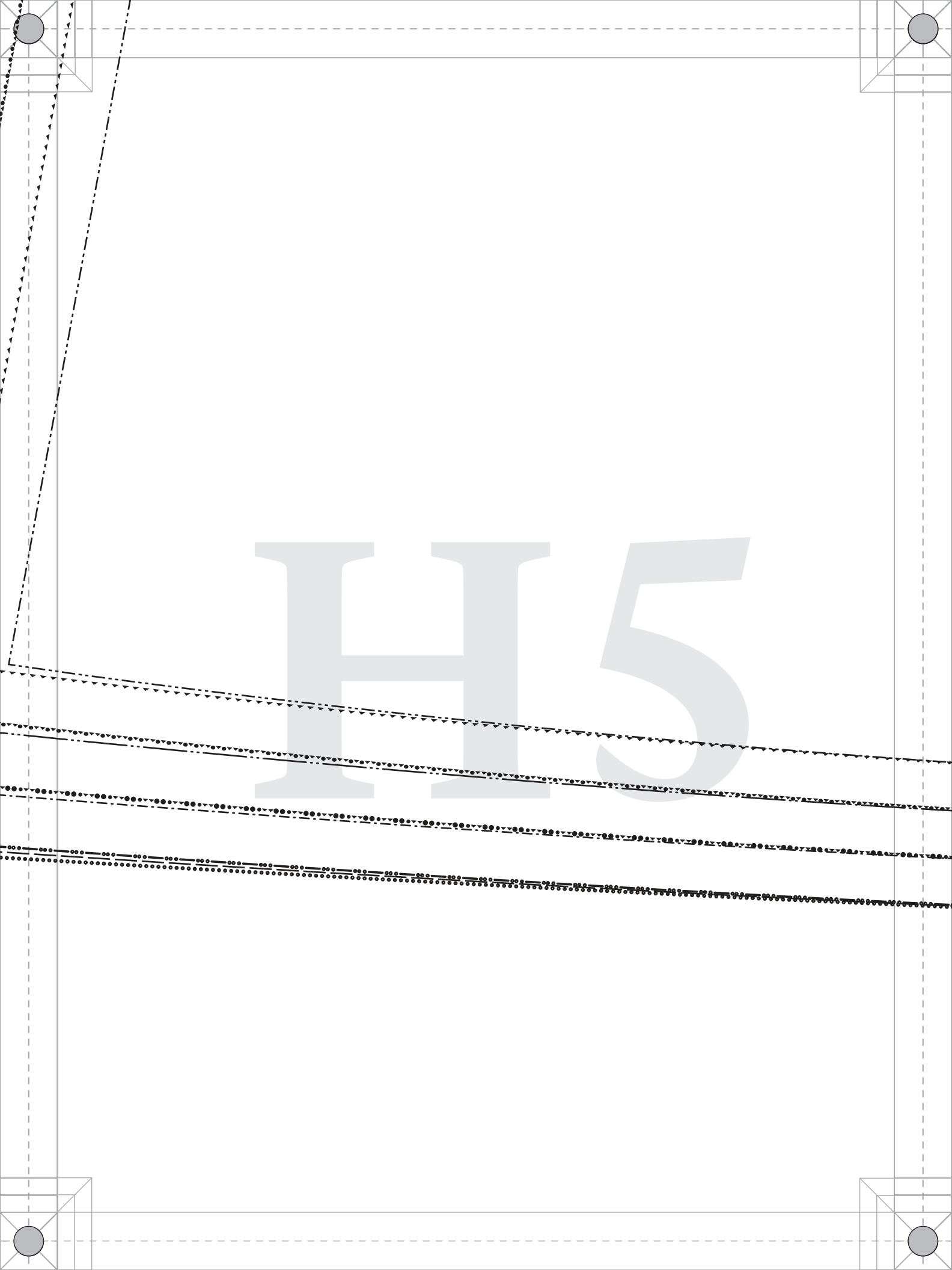
H5

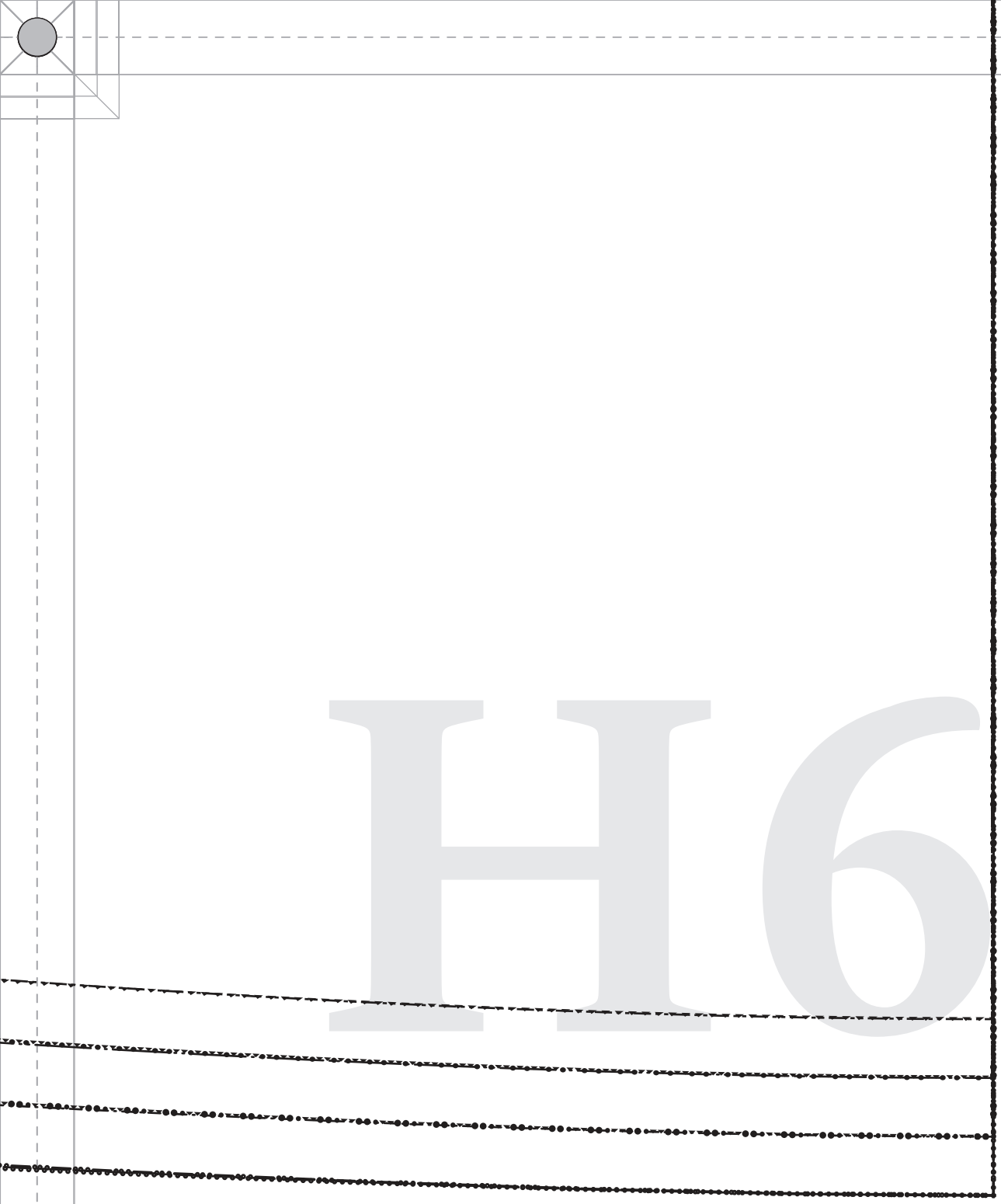
H6