PATTERNS BY mood FABRICS

MDF494

#MoodBayportPattern

"The Bayport Blousee"

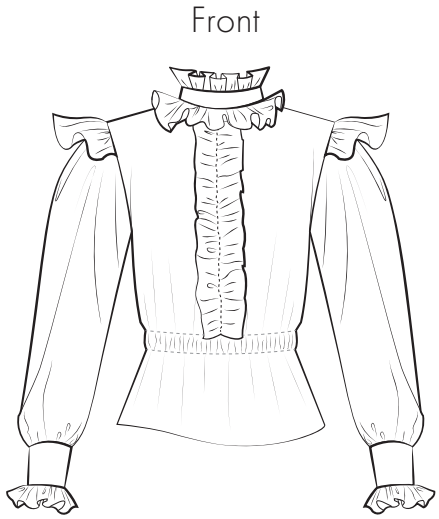

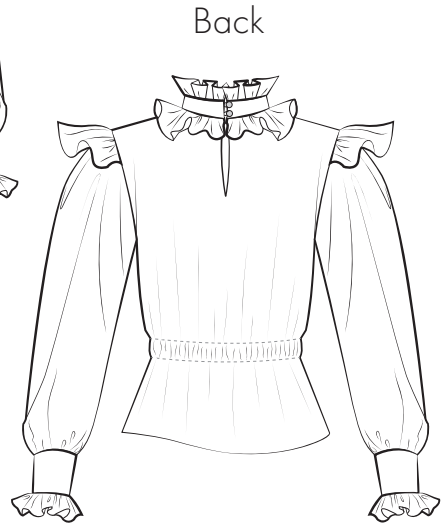

STOP!

Print only this page first to check accuracy. The Mood square above should measure 2 inches. Print "actual size" in "portrait" mode (not auto center). Formatted for both US Letter & A4 paper sizes.

Formatted for both US Letter & A4 Paper

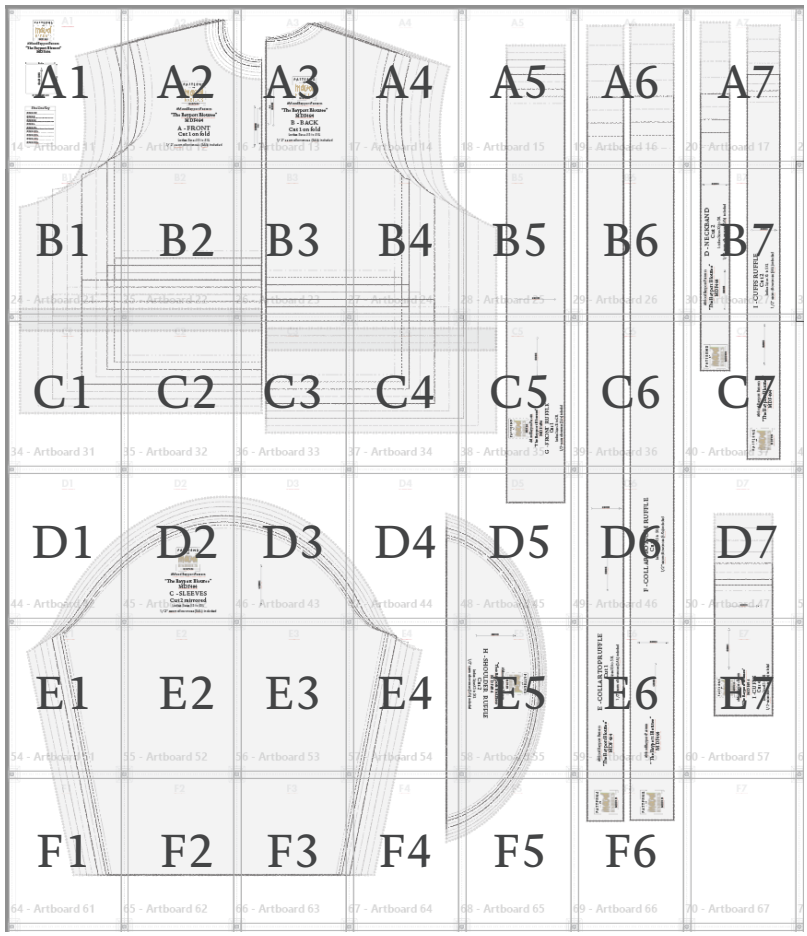

Trimless Option:
This is the fastest! No trimming needed! Place left-side margins over right-side margins, overlapping dashed lines and dots. In the same fashion, top margins will overlap bottom margins. Slight unprinted gaps are normal for this method.

Trimmed Option:
This removes any unprinted gaps. Trim along the top and right margins at the dashed lines. Overlap the trimmed margins to the untrimmed margins, matching dashed lines and dots.

Tip! Build rows first, then join the rows together as you go.

©2026 MoodFabrics.com / MoodSewciety.com
Mass production, resale, or distribution of this pattern in any form is strictly prohibited.

mood SEWCIETY

#MoodBayportPattern

PATTERNS BY mood FABRICS MDF494

MDF494 - "The Bayport Blouse"

Ladies Sizes XS to 5XL

BODY MEASUREMENTS - IN INCHES (Chart 1)

SIZE	XS	S	M	L	XL	2XL	3XL	4XL	5XL
BUST	31 - 32	33 - 34	35 - 36	37 - 39	40 - 43	44 - 47	48 - 51	52 - 55	56 - 60
WAIST	23 - 24	25 - 26	27 - 28	29 - 31	32 - 35	36 - 39	40 - 43	44 - 47	48 - 52
HIPS	34 - 35	36 - 37	38 - 39	40 - 42	43 - 46	47 - 50	51 - 54	55 - 58	59 - 63

APPROXIMATE FINISHED GARMENT MEASUREMENTS - IN INCHES (Chart 2)

SIZE	XS	S	M	L	XL	2XL	3XL	4XL	5XL
BUST	35	37	39	42	46	50	54	58	63
WAIST*	35	37	39	42	46	50	54	58	63
LENGTH	22	22.5	23	23.5	24	24.5	25.5	26	26.5

*Before adding elastic.

Size guide is based on the suggested design & wearing ease for this style. You can also choose the size according to your desired finished garment measurements, blending between sizes as needed. Measure the printed patterns to make sure the dimensions are according to the desired fitting and adjust if needed before cutting the fabric. For best results sew a test garment in a similar fabric to adjust your pattern.

Recommended Fabric: Cotton Shirting, Poplin.

We love creating these free patterns for the community and we want to keep them free! In return, we hope you check out MoodFabrics.com for your next project!

Want to use one of our patterns to make a garment to sell? Our patterns are royalty-free! We just ask that you credit us with:
MoodSewciety.com
or
MoodFabrics.com
in your product description.

FOR SEWING INSTRUCTIONS AND MORE INFORMATION:
Scan the QR code or visit MoodSewciety.com and search "MDF494"

1/2" seam allowances (SA's) included unless stated otherwise.

REMEMBER TO SHARE YOUR MADE WITH MOOD LOOK!

Tag us and use:
#MoodBayportPattern
for a shot at being featured on our social media

@mood.fabrics
@moodfabrics
@Mood_Fabrics
@moodfabrics
@moodfabrics

The Mood Sewciety Team

©2026 MoodFabrics.com / MoodSewciety.com
Mass production, resale, or distribution of this pattern in any form is strictly prohibited.

mood SEWCIETY

PATTERNS BY mood FABRICS MDF494

"The Bayport Blousee"

PATTERN PIECES

A	**FRONT** FABRIC - CUT 1 ON FOLD
B	**BACK** FABRIC - CUT 1 ON FOLD
C	**SLEEVES** FABRIC - CUT 2 MIRRORED
D	**COLLAR** FABRIC - CUT 2
E	**COLLAR TOP RUFFLE** FABRIC - CUT 1
F	**COLLAR BOTTOM RUFFLE** FABRIC - CUT 1
G	**FRONT RUFFLE** FABRIC - CUT 1
H	**SHOULDER RUFFLES** FABRIC - CUT 2
I	**CUFFS** FABRIC - CUT 4
J	**CUFFS RUFFLE** FABRIC - CUT 2

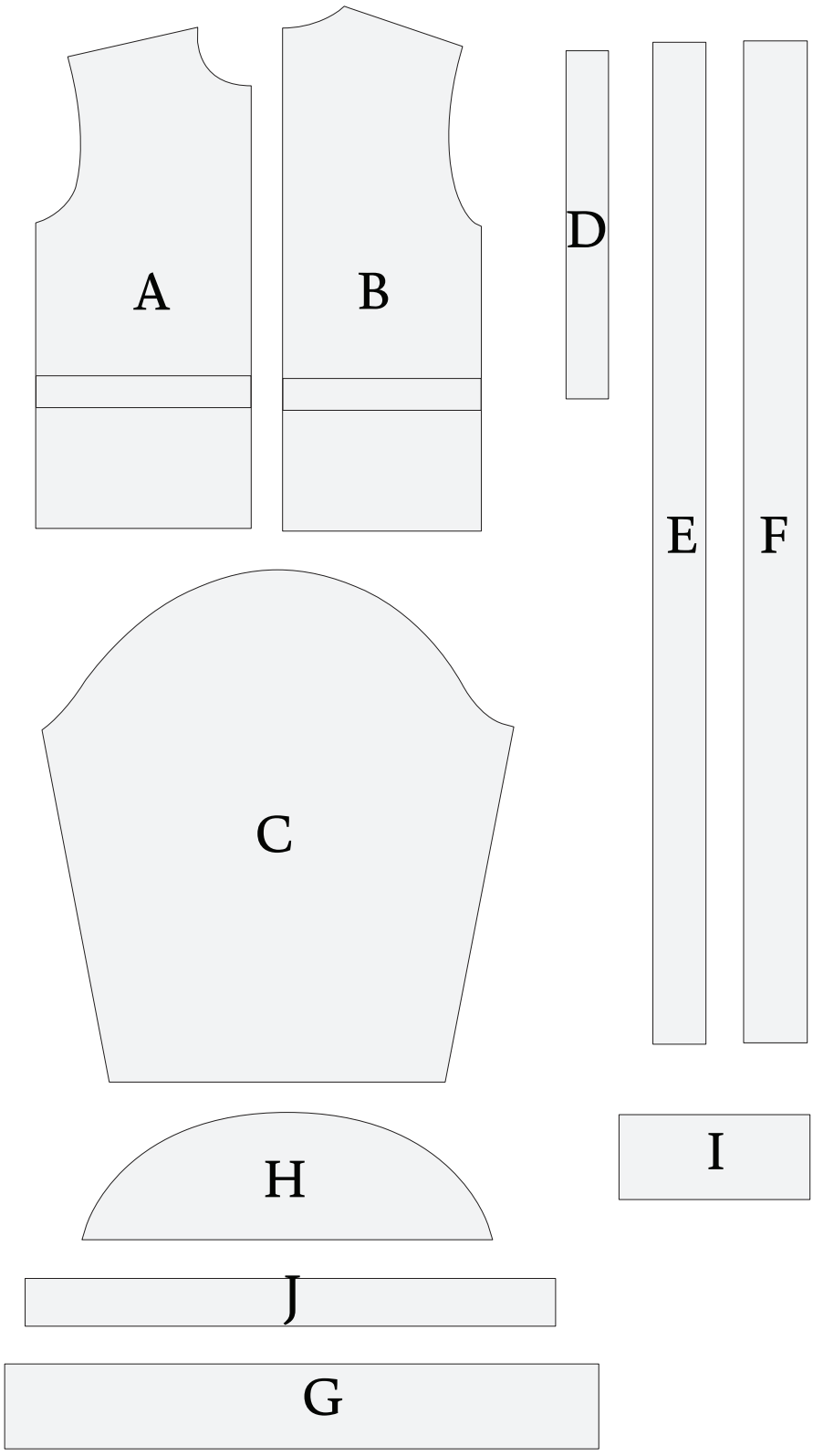

©2026 MoodFabrics.com / MoodSewciety.com
Mass production, resale, or distribution of this pattern in any form is strictly prohibited.
mood SEWCIETY

PATTERNS BY mood FABRICS MDF494

#MoodBayportPattern

"The Bayport Blousee"
MDF494

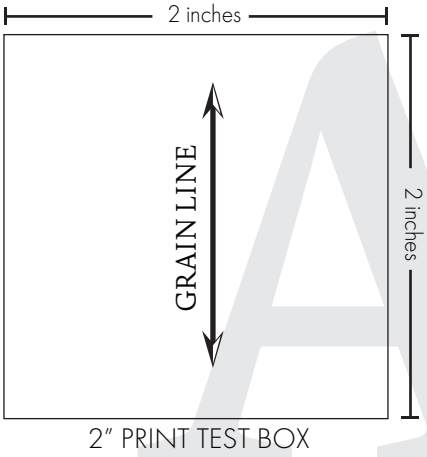

Size Line Key
SIZE XS
SIZE S
SIZE M
SIZE L
SIZE XL
SIZE 2XL
SIZE 3XL
SIZE 4XL
SIZE 5XL

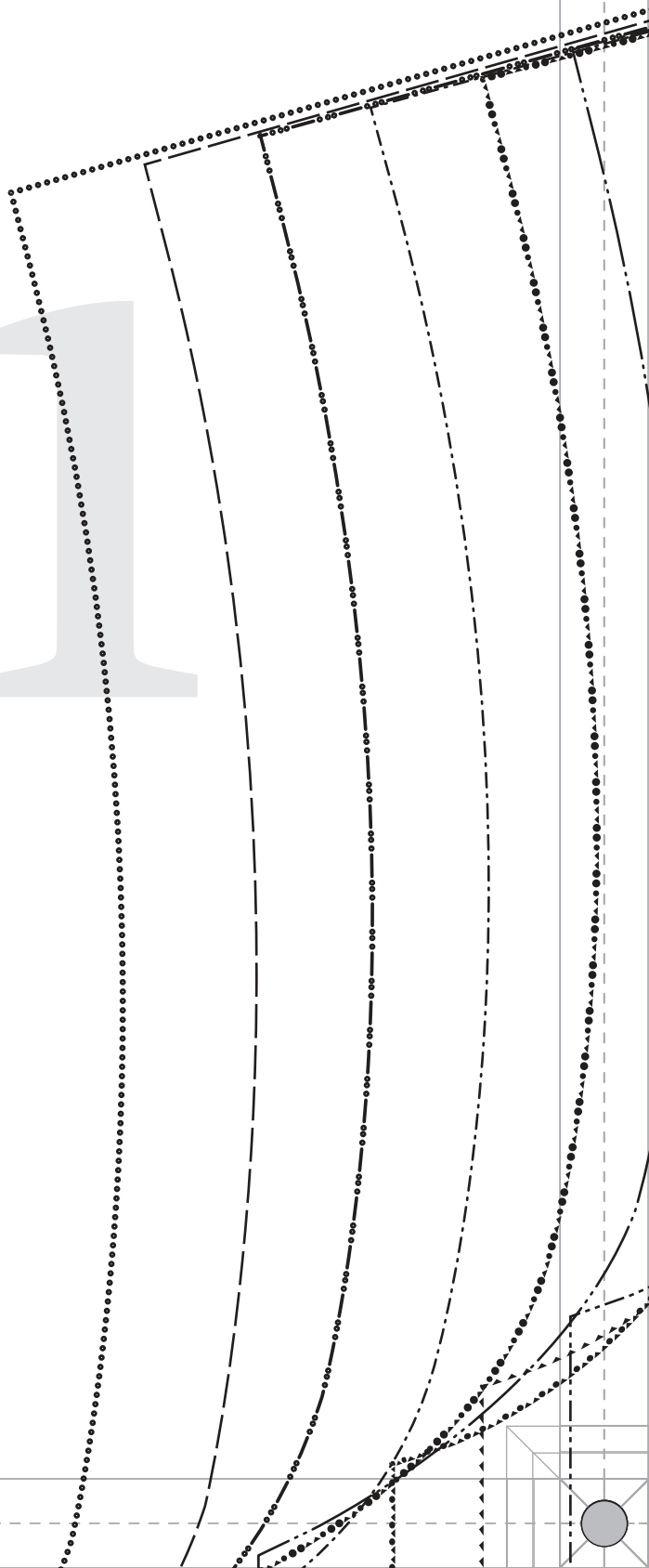

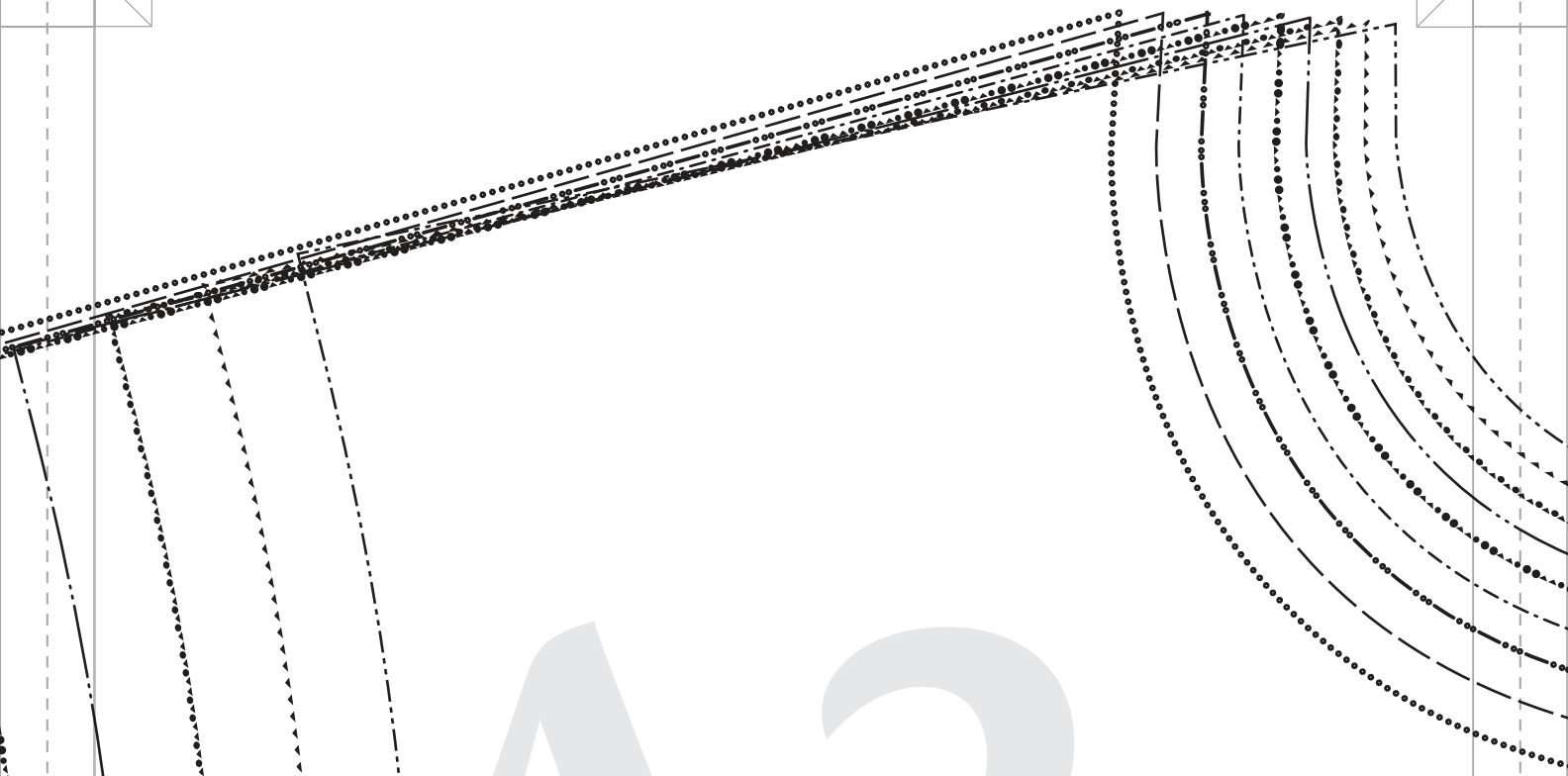

A2

PATTERNS BY mood FABRICS MDF494

#MoodBayportPattern

"The Bayport Blousee"
MDF494

A - FRONT
Cut 1 on fold

Ladies Sizes XS to 5XL

1/2" seam allowances (SA's) included

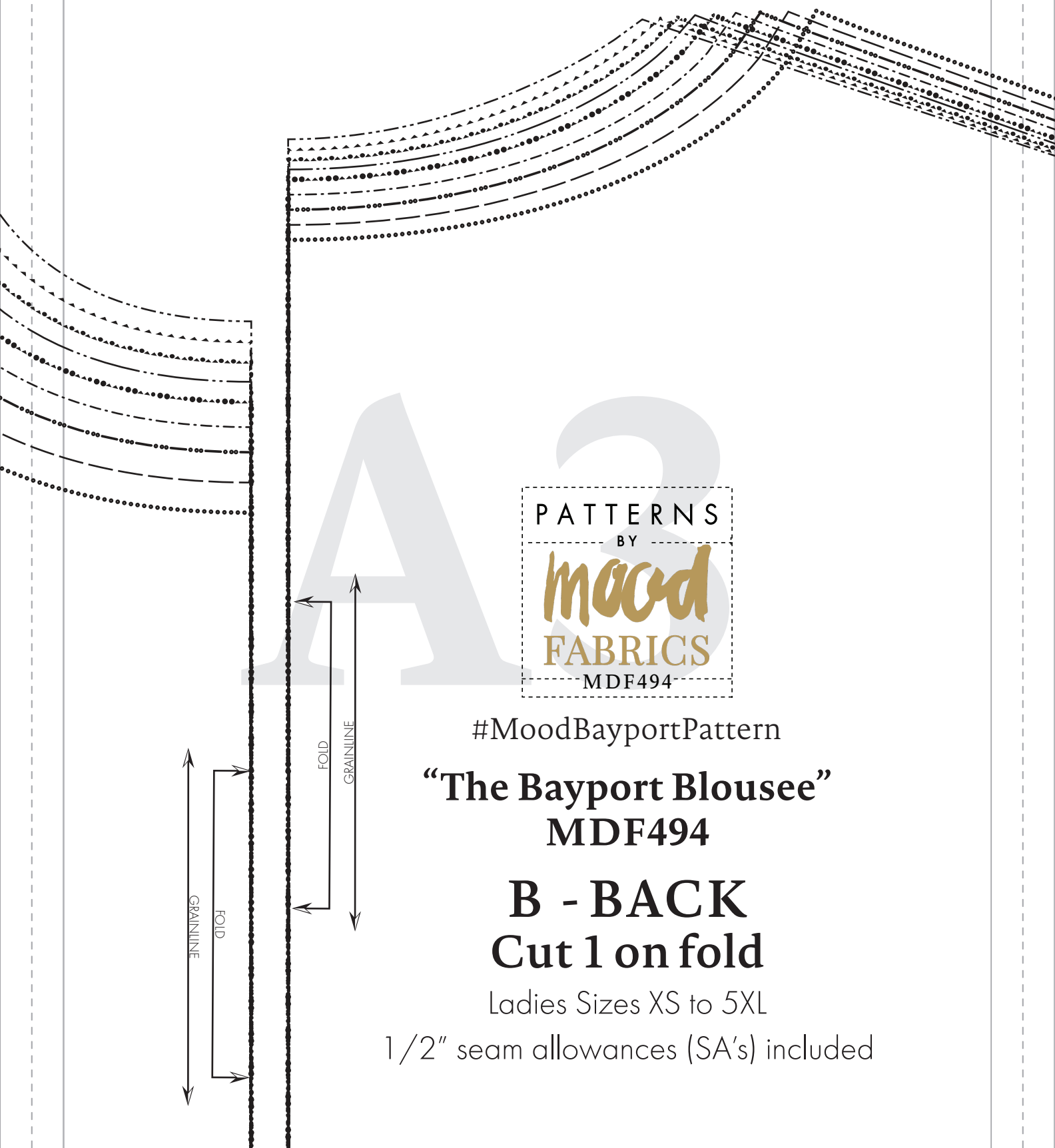

PATTERNS BY mood FABRICS MDF494

#MoodBayportPattern

"The Bayport Blousee" MDF494

B - BACK
Cut 1 on fold

Ladies Sizes XS to 5XL

1/2" seam allowances (SA's) included

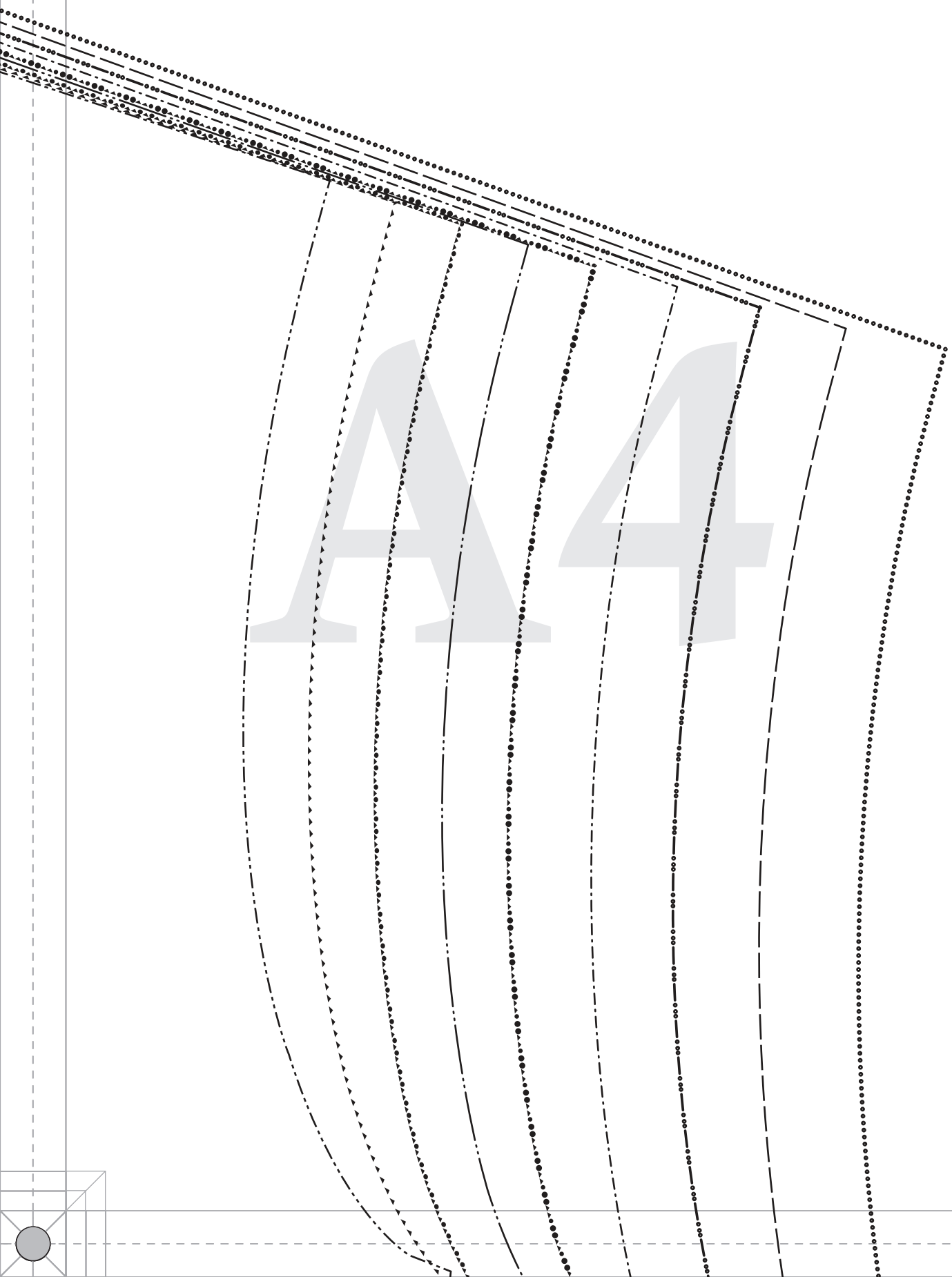
A4

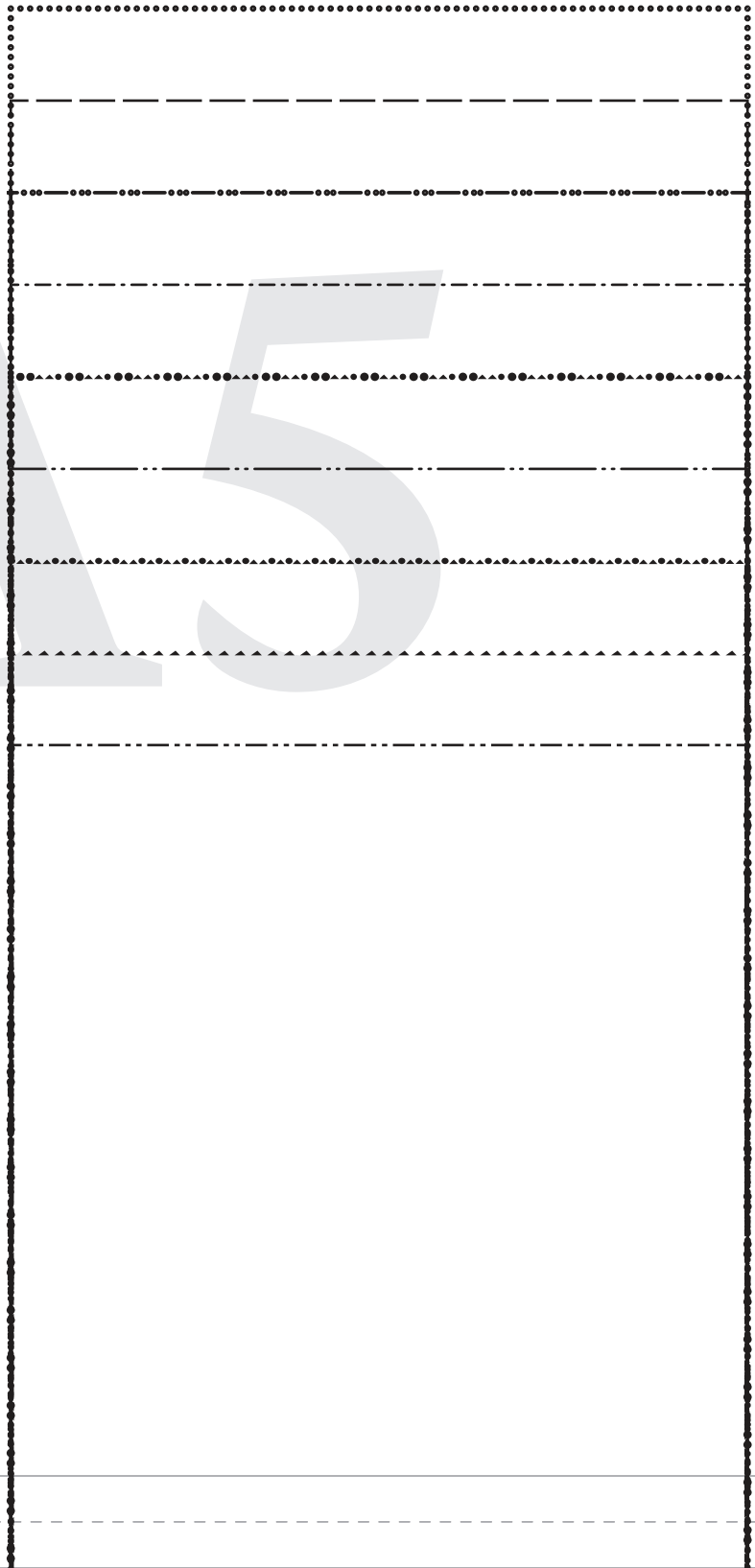
A5

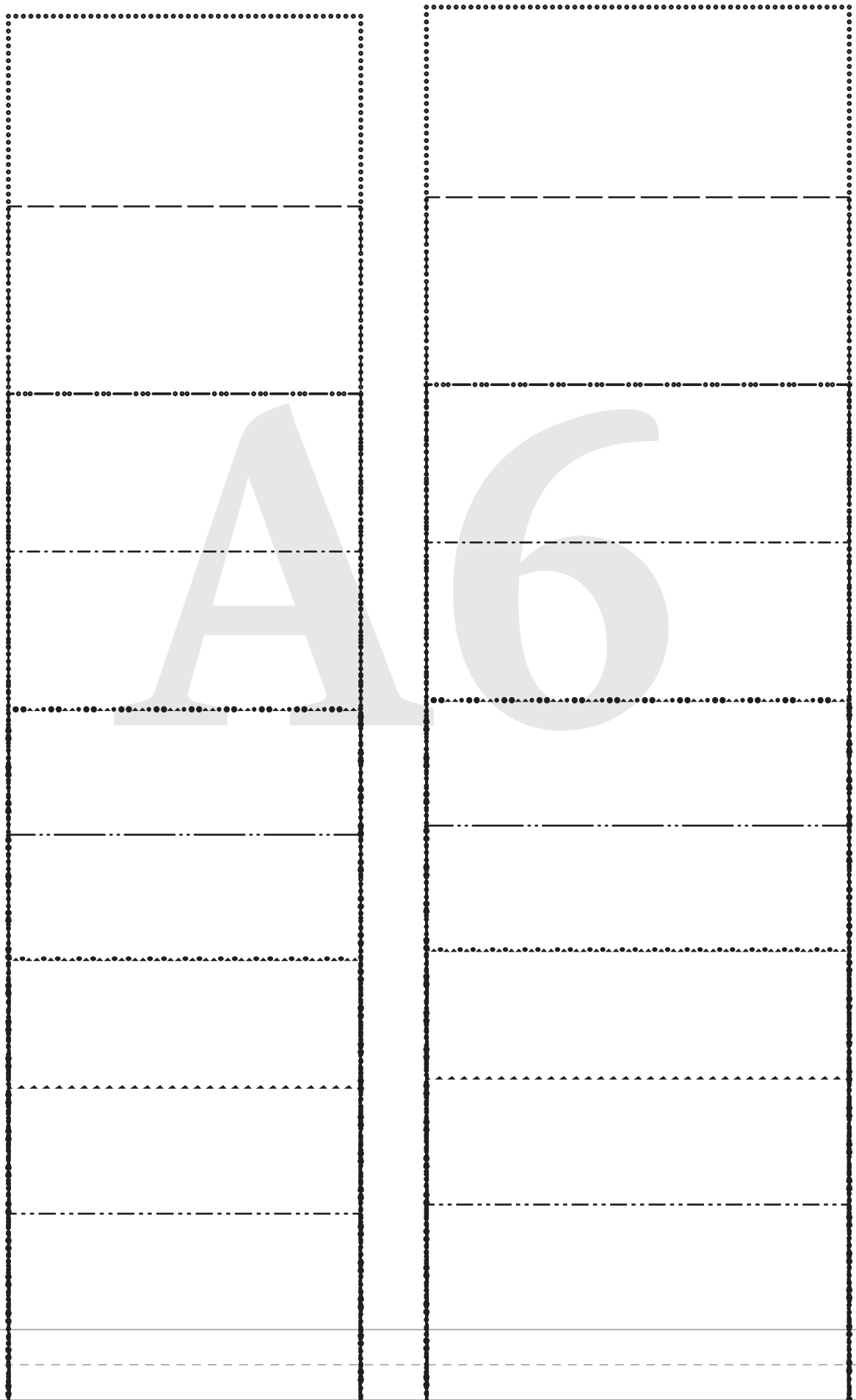
A6

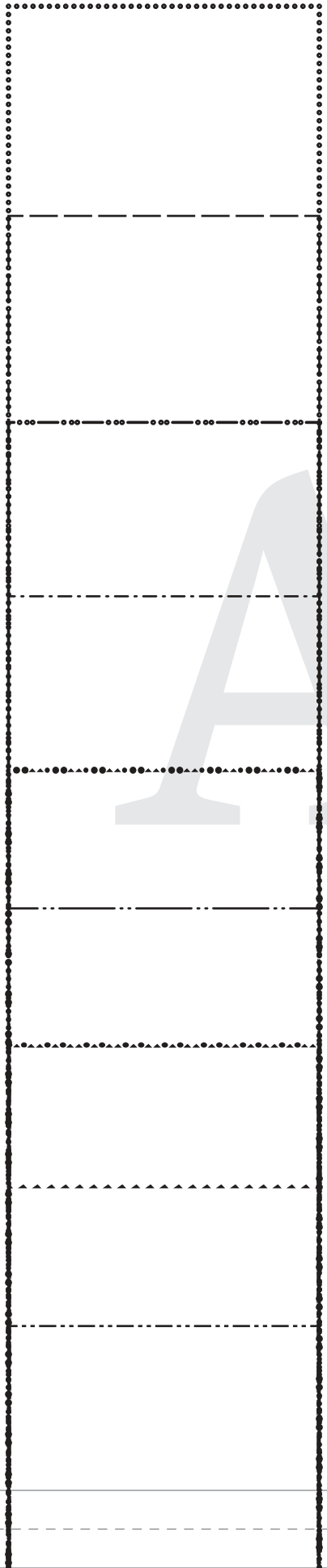

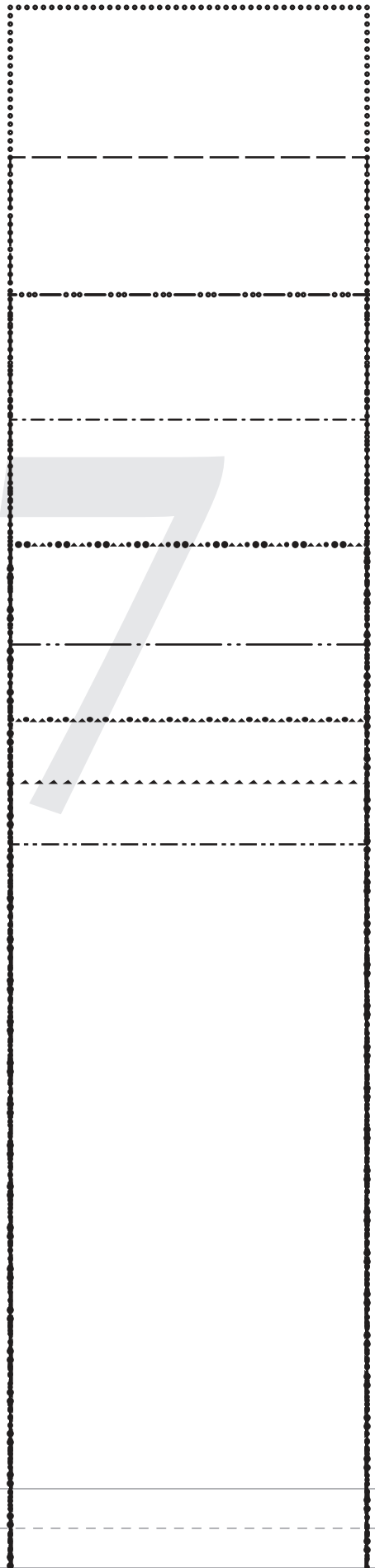

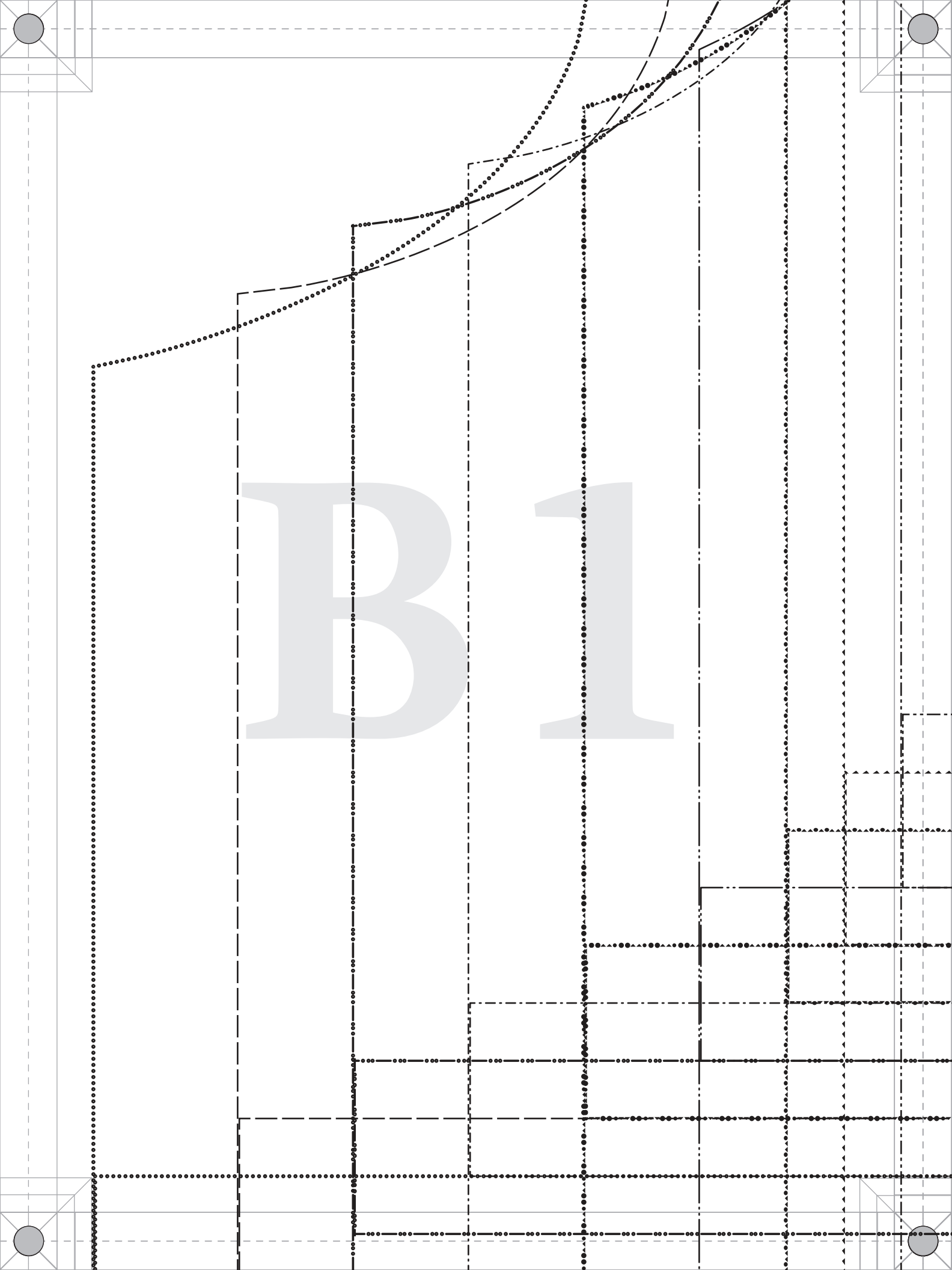
B1

B2

B3

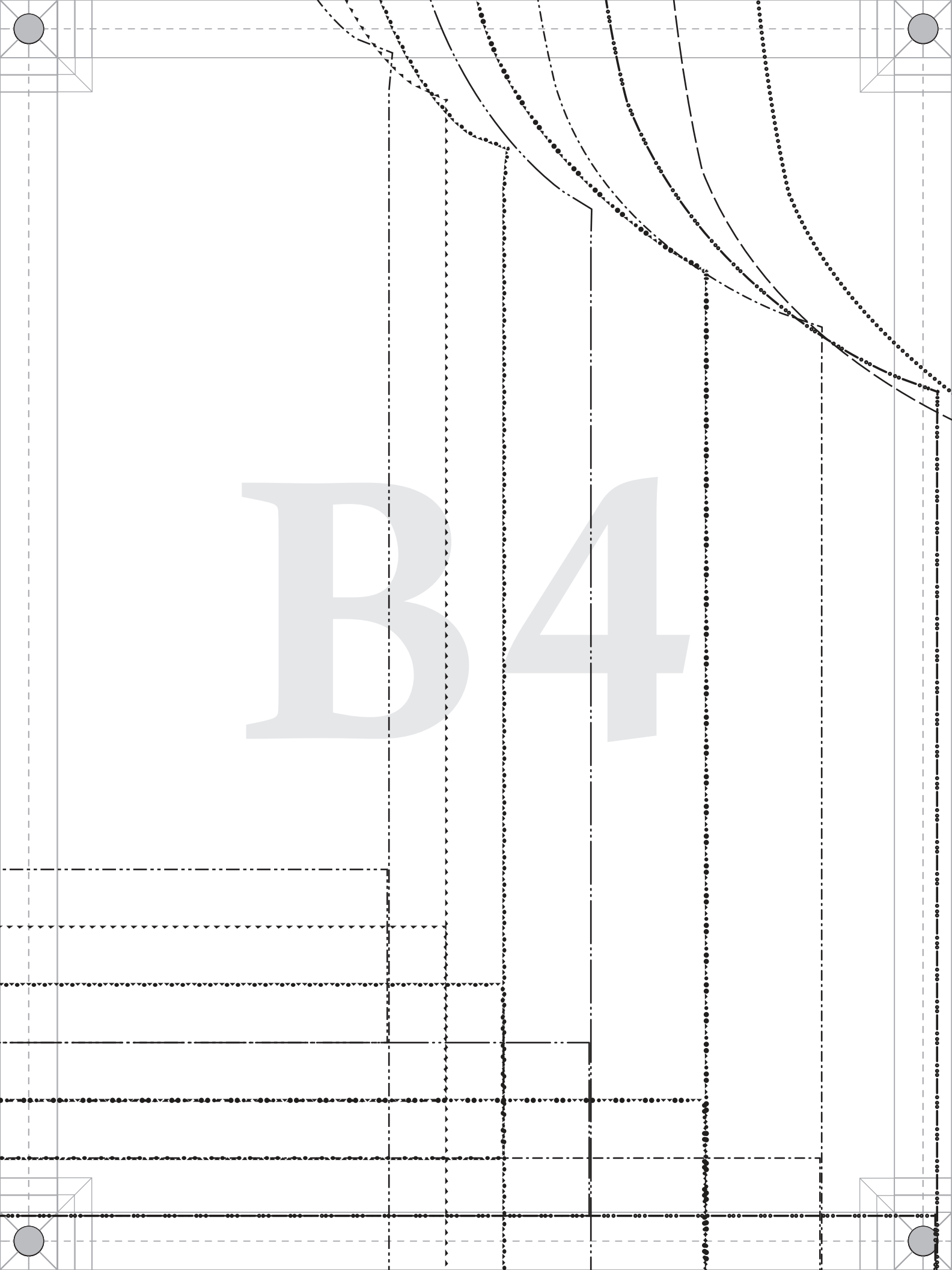
B4

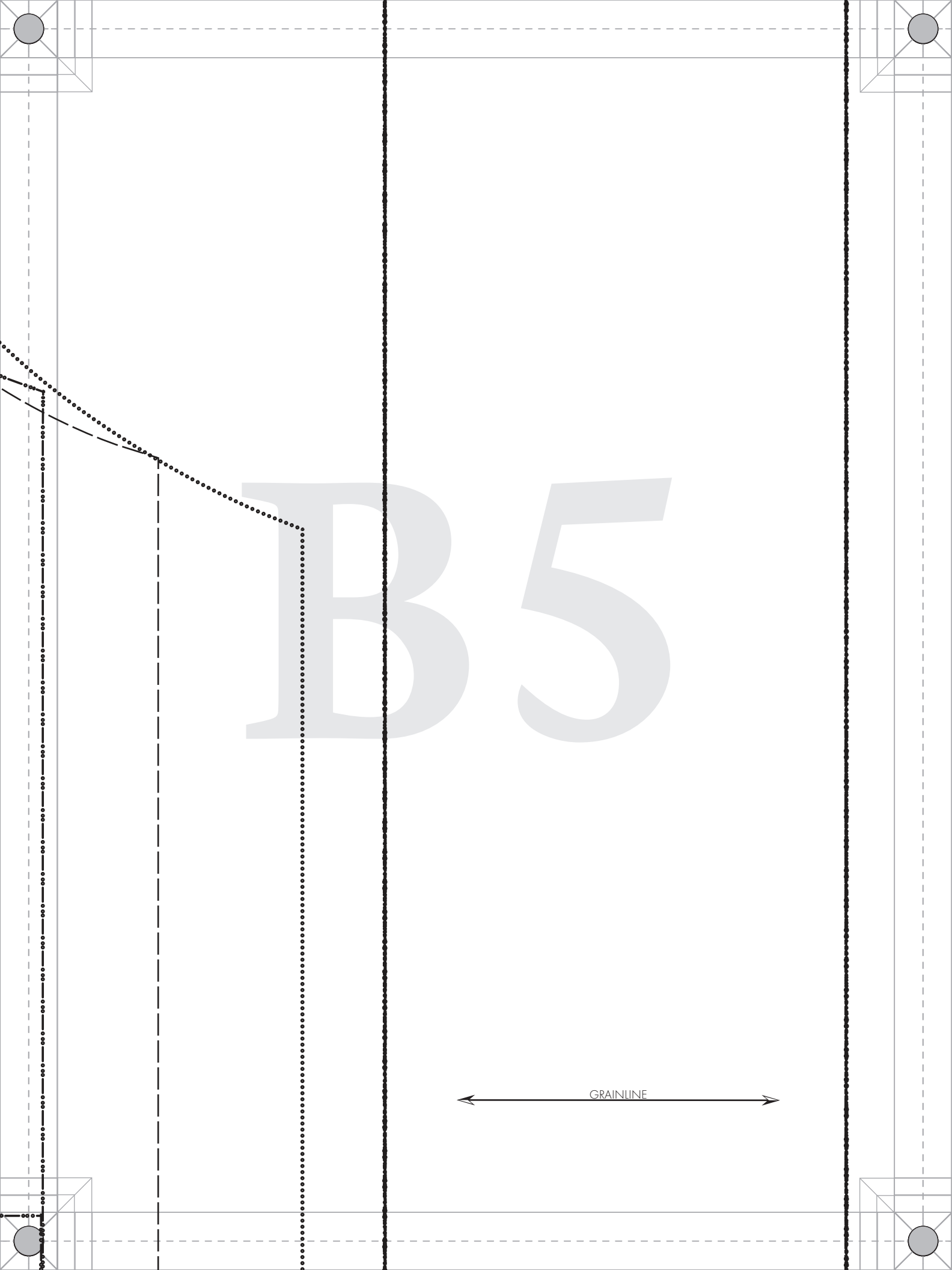
B5
GRAINLINE

B6

#MoodBayportPattern

“The Bayport Blousee”
MDF494



D - NECKBAND
Cut 2

Ladies Sizes XS to 5XL

1/2″ seam allowances (SA’s) included



I - CUFFS RUFFLE
Cut 2

Ladies Sizes XS to 5XL

1/2″ seam allowances (SA’s) included



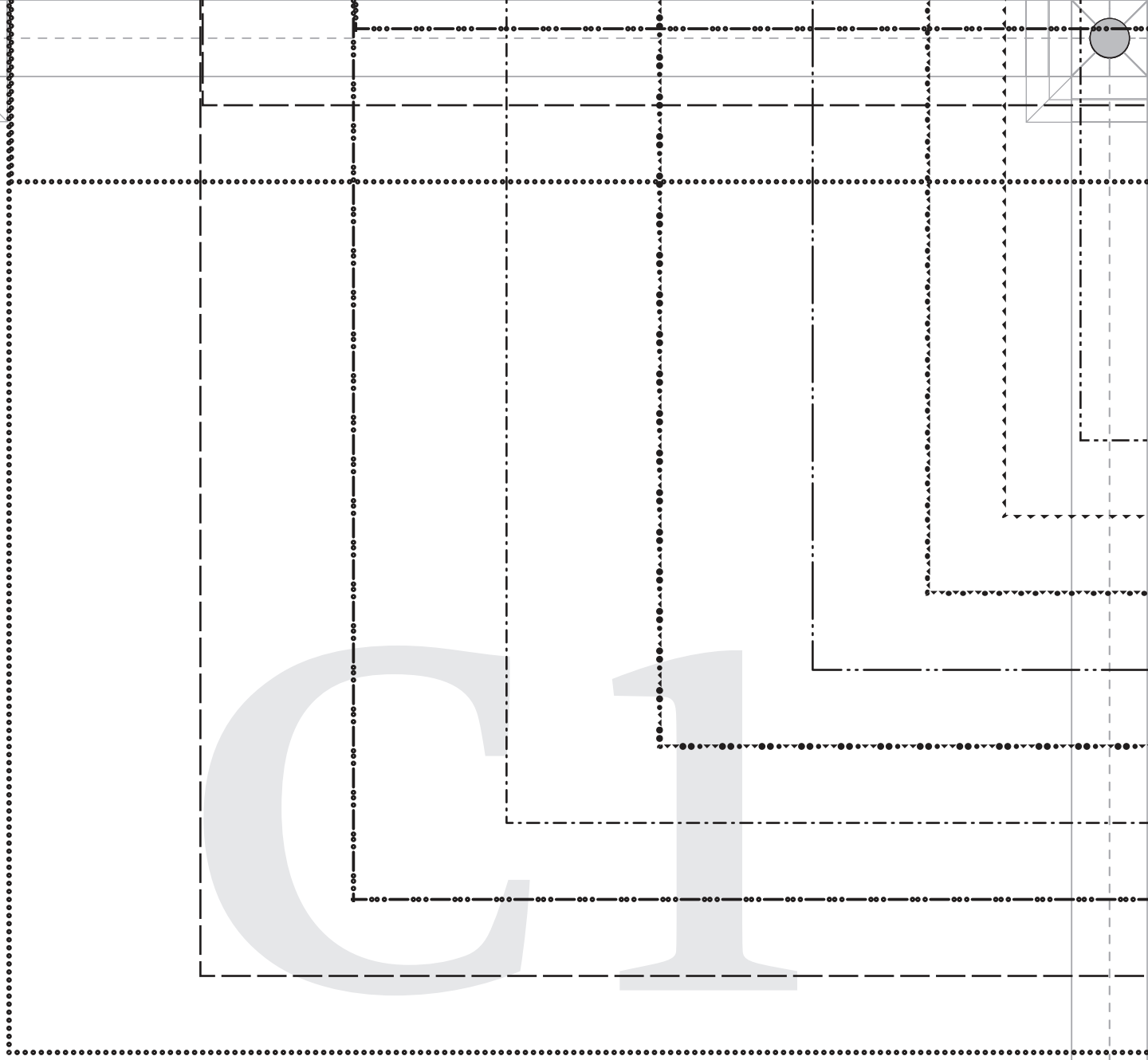

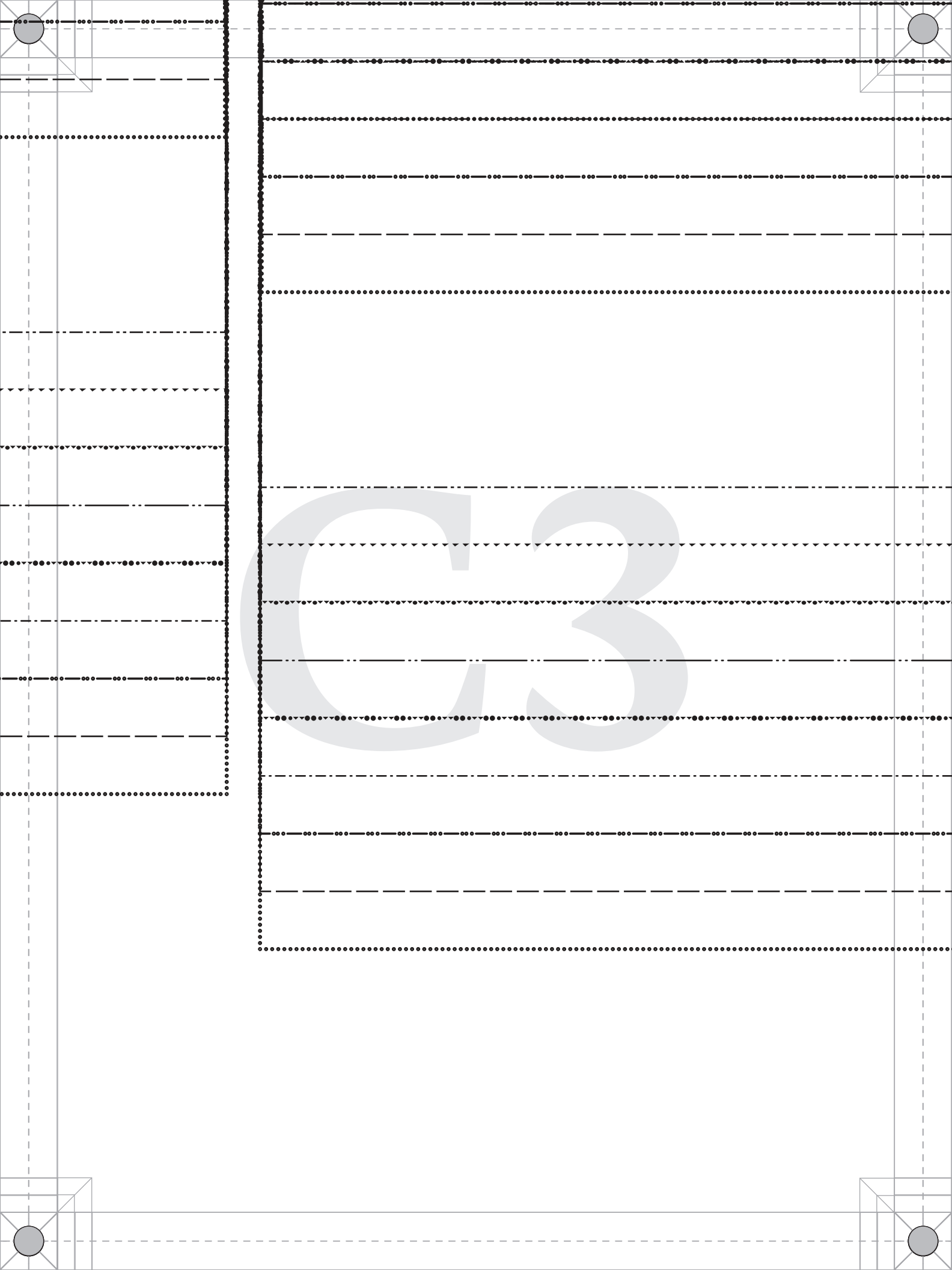

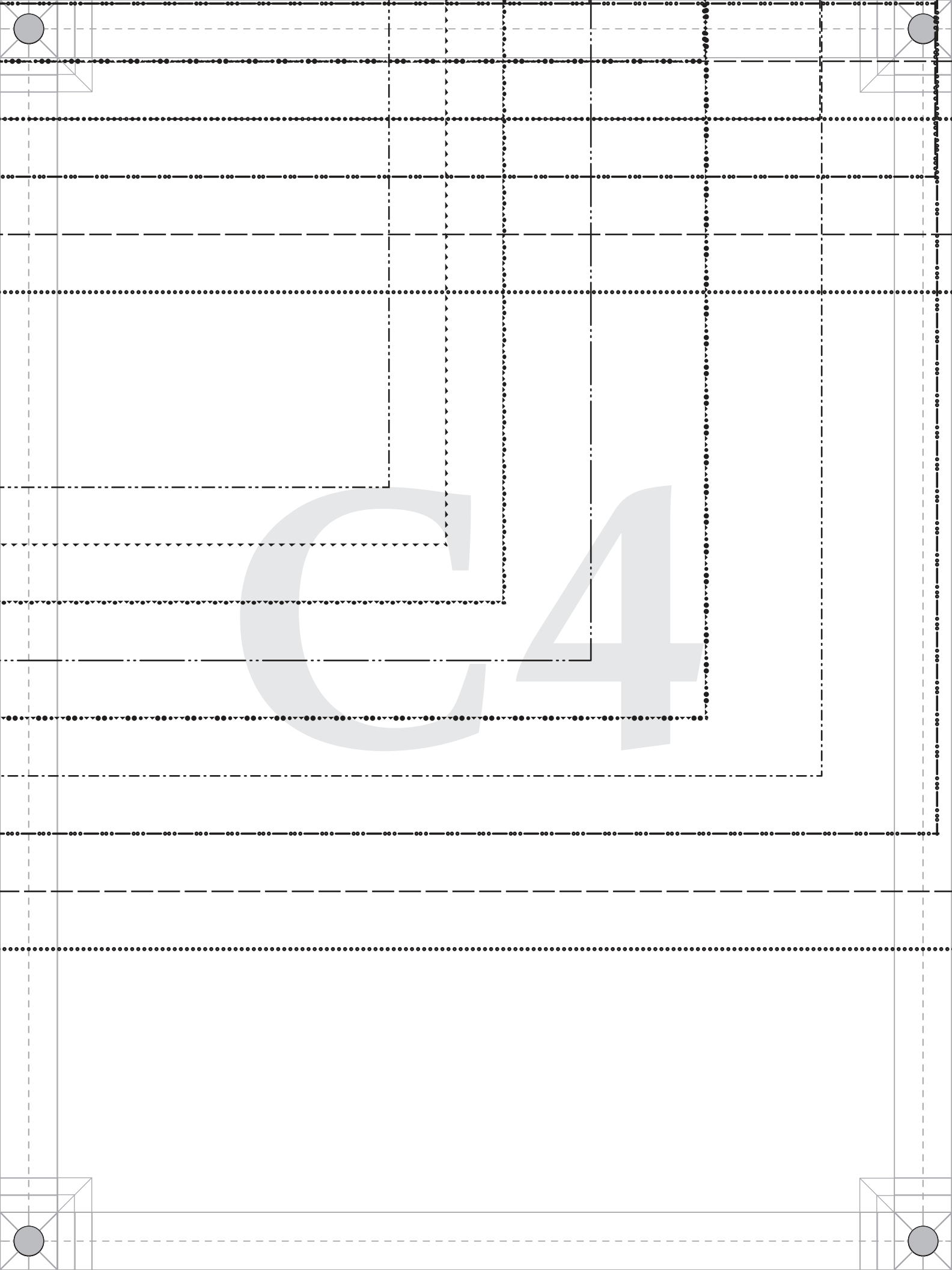
C4

PATTERNS BY mood FABRICS MDF494

#MoodBayportPattern

“The Bayport Blousee”
MDF494

G - FRONT RUFFLE

Cut 1

Ladies Sizes XS to 5XL

1/2” seam allowances (SA’s) included

C6

PATTERNS BY mood FABRICS MDF494

PATTERNS BY mood FABRICS MDF494

#MoodBayportPattern

“The Bayport Blousee” MDF494



D1

PATTERNS BY mood FABRICS MDF494

#MoodBayportPattern

"The Bayport Blousee"
MDF494

C - SLEEVES
Cut 2 mirrored

Ladies Sizes XS to 5XL

1/2" seam allowances (SA's) included

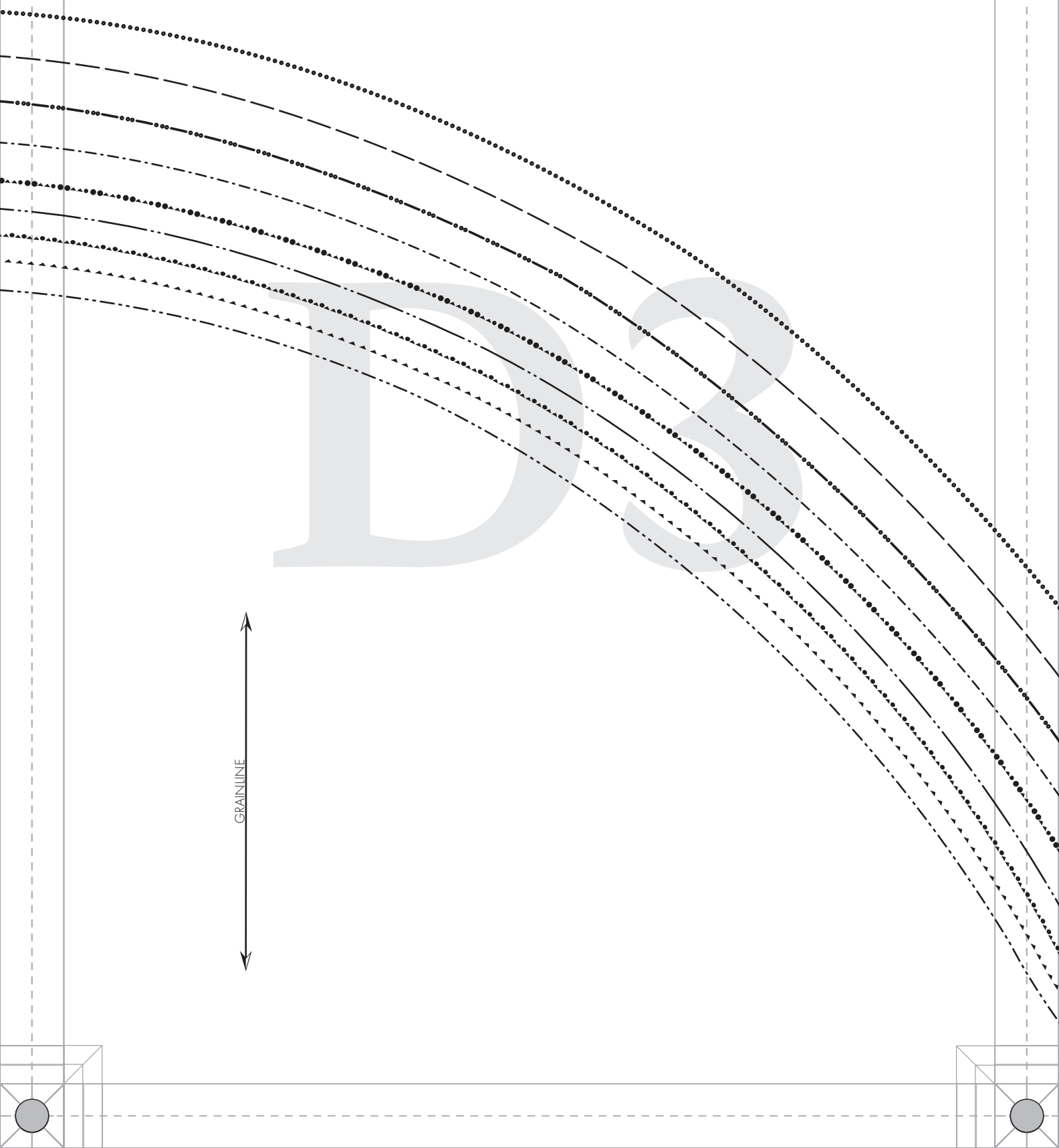
GRAINLINE

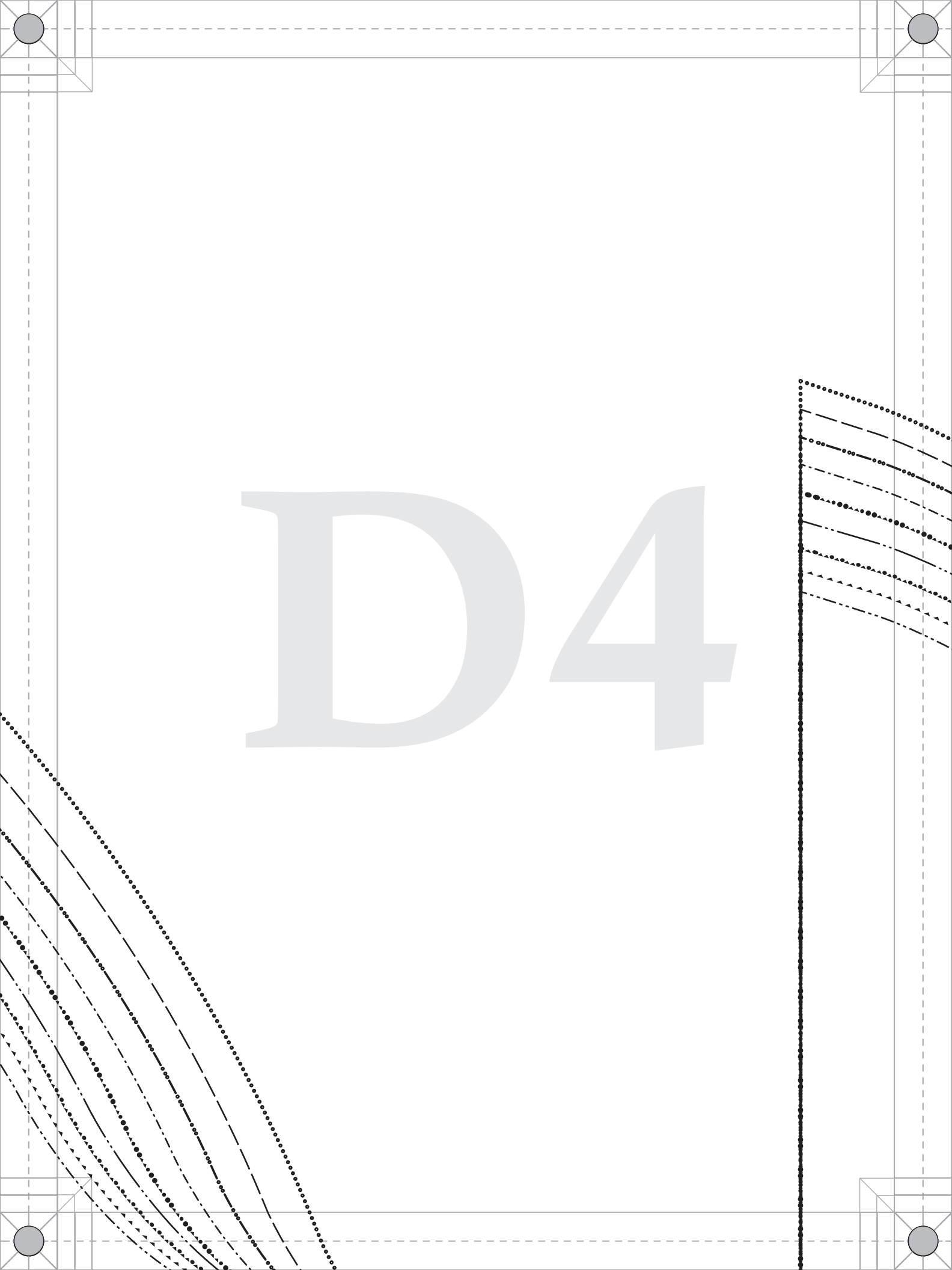
D4

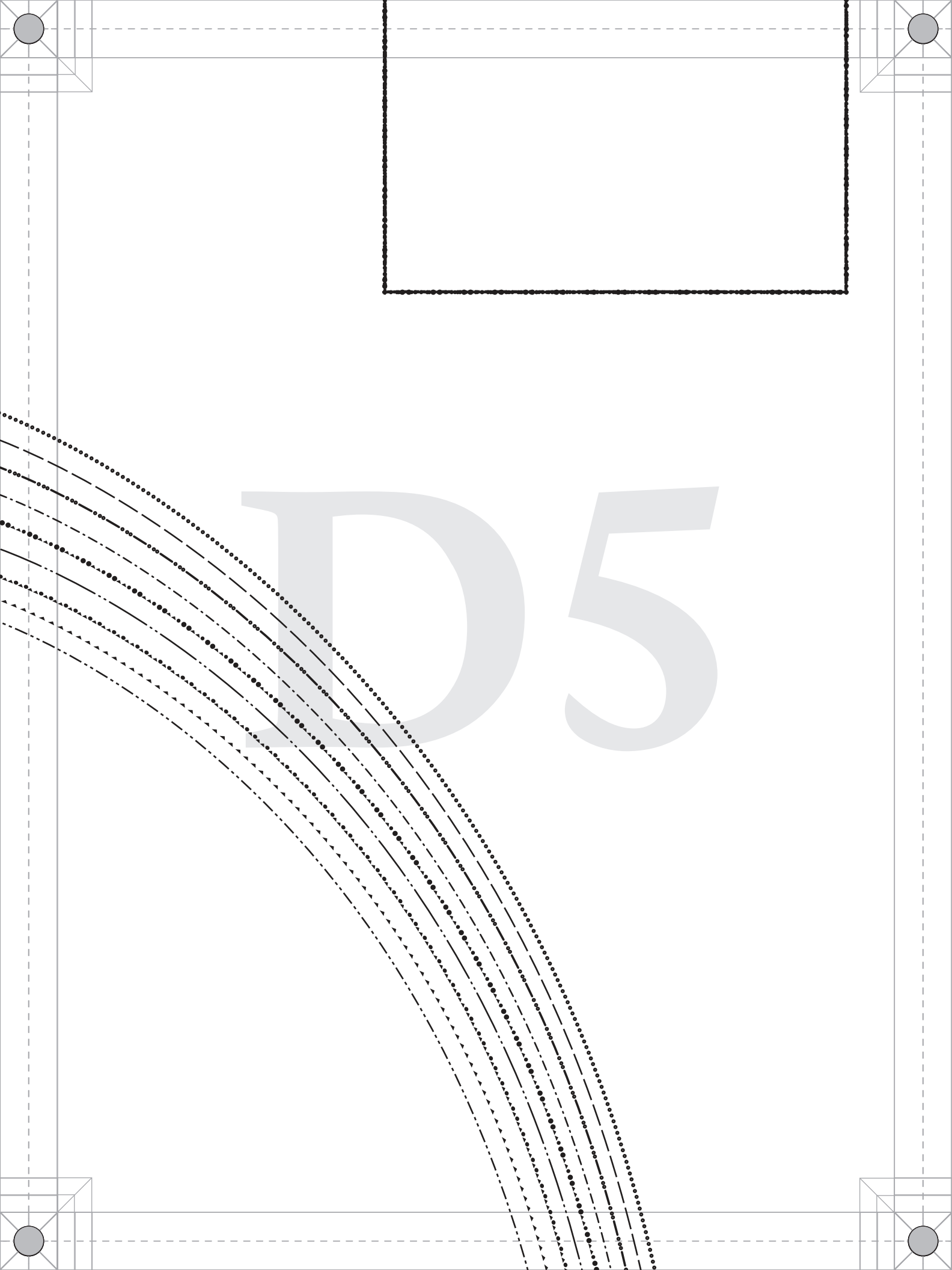
D5

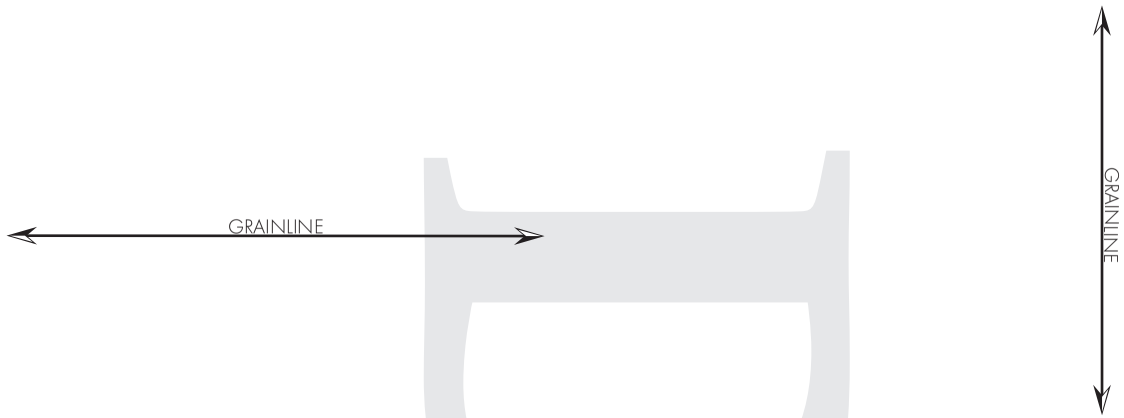

F - COLLAR BOTTOM RUFFLE

Cut 1

Ladies Sizes XS to 5XL

1/2" seam allowances (SA's) included

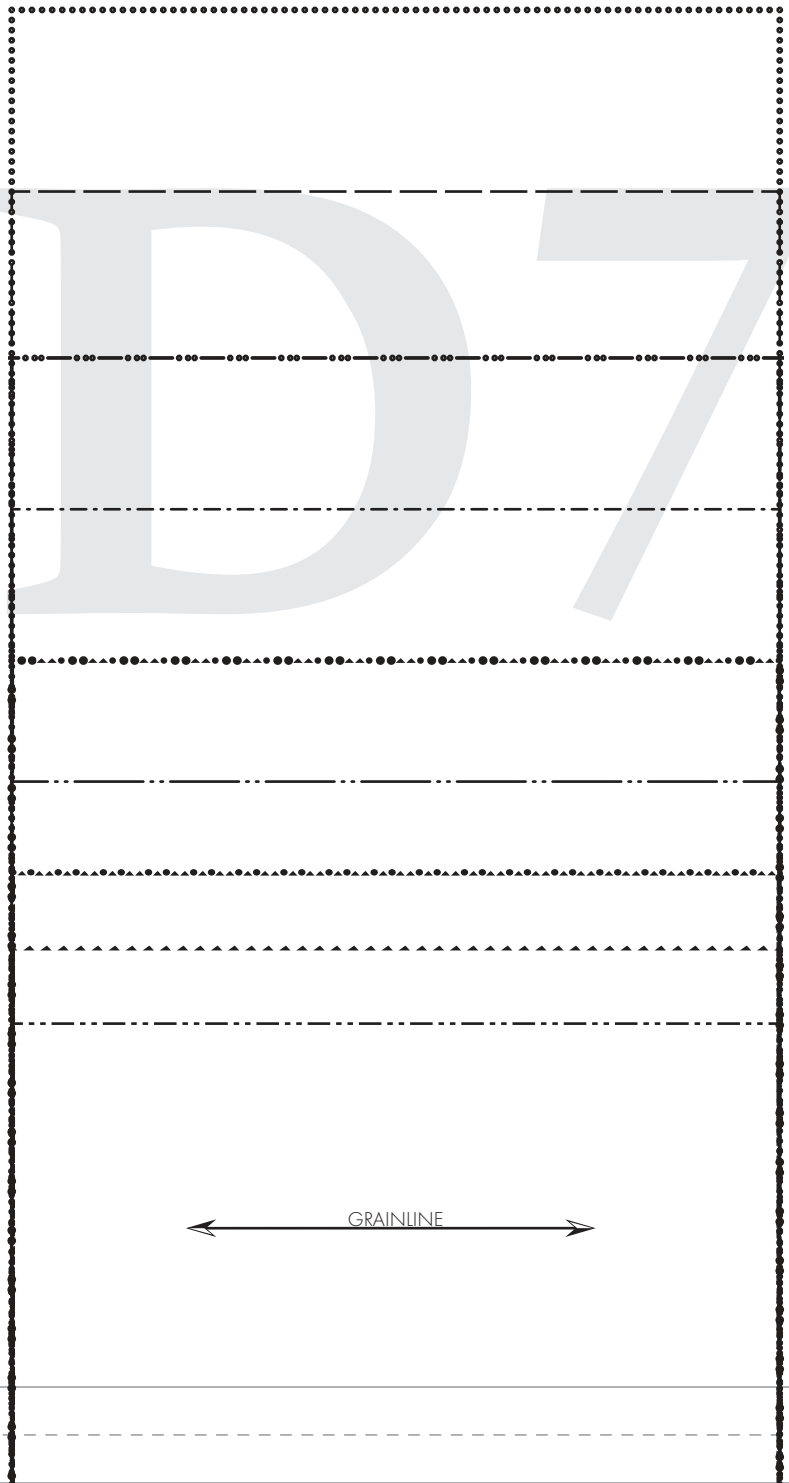
D7
GRAINLINE

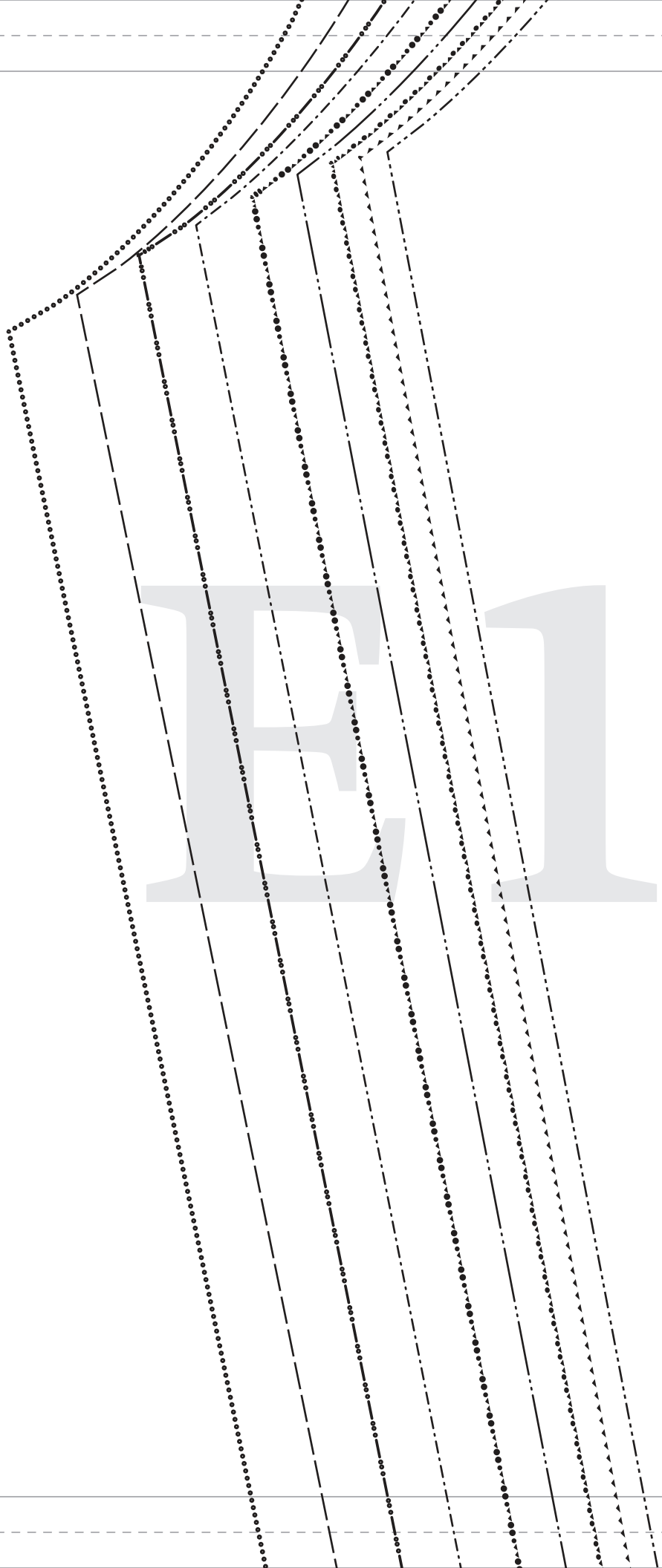

E2

E3

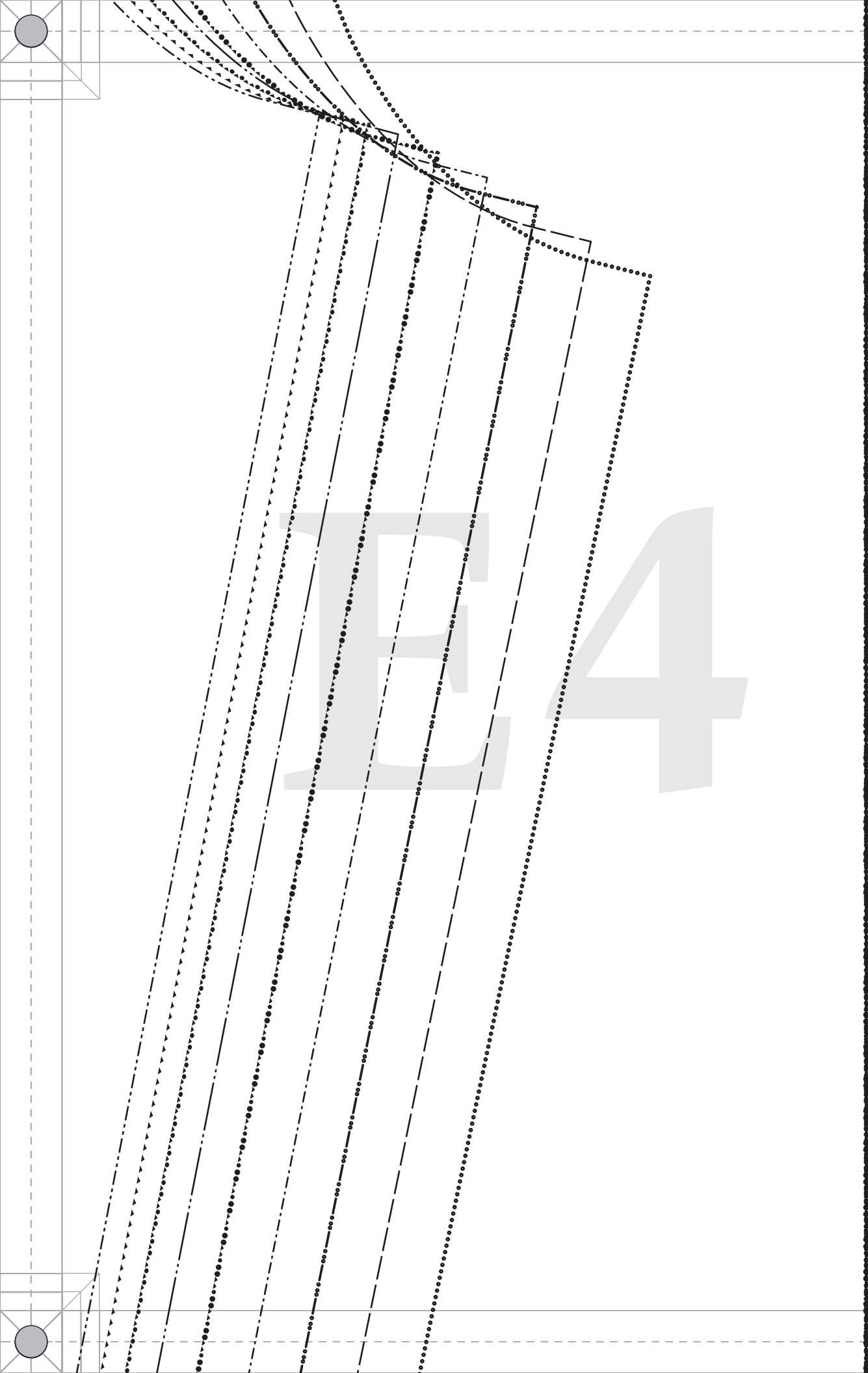

PATTERNS BY mood FABRICS MDF494

#MoodBayportPattern

“The Bayport Blousee”
MDF494

H - SHOULDER RUFFLE

Cut 2

Ladies Sizes XS to 5XL

1/2” seam allowances (SA’s) included



#MoodBayportPattern

“The Bayport Blousee”
MDF494

E - COLLAR TOP RUFFLE
Cut 1

Ladies Sizes XS to 5XL

1/2” seam allowances (SA’s) included

#MoodBayportPattern

“The Bayport Blousee”
MDF494





PATTERNS BY mood FABRICS MDF494

#MoodBayportPattern

"The Bayport Blousee"
MDF494

I - CUFFS
Cut 4

Ladies Sizes XS to 5XL

1/2" seam allowances (SA's) included



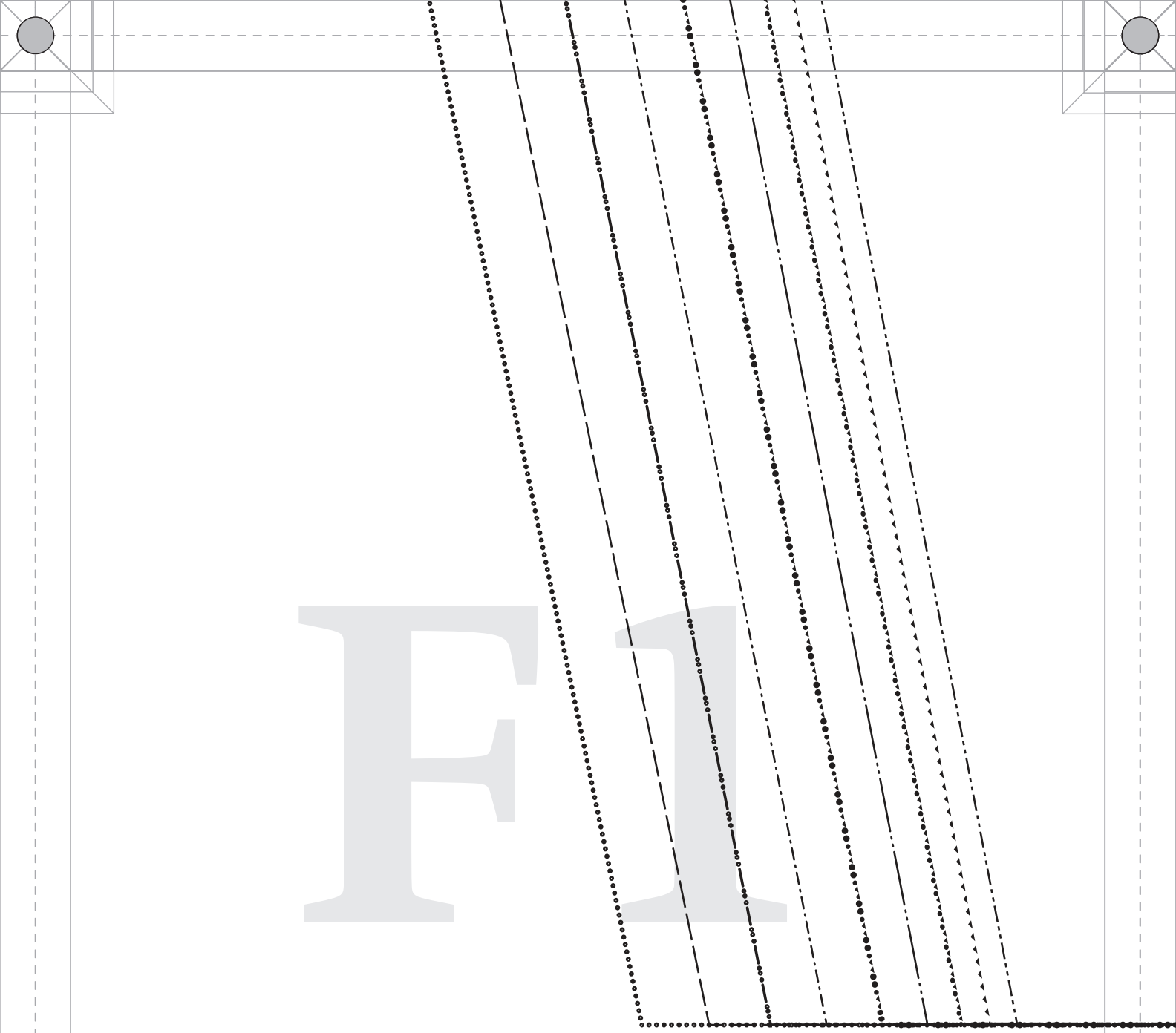

F2

F3

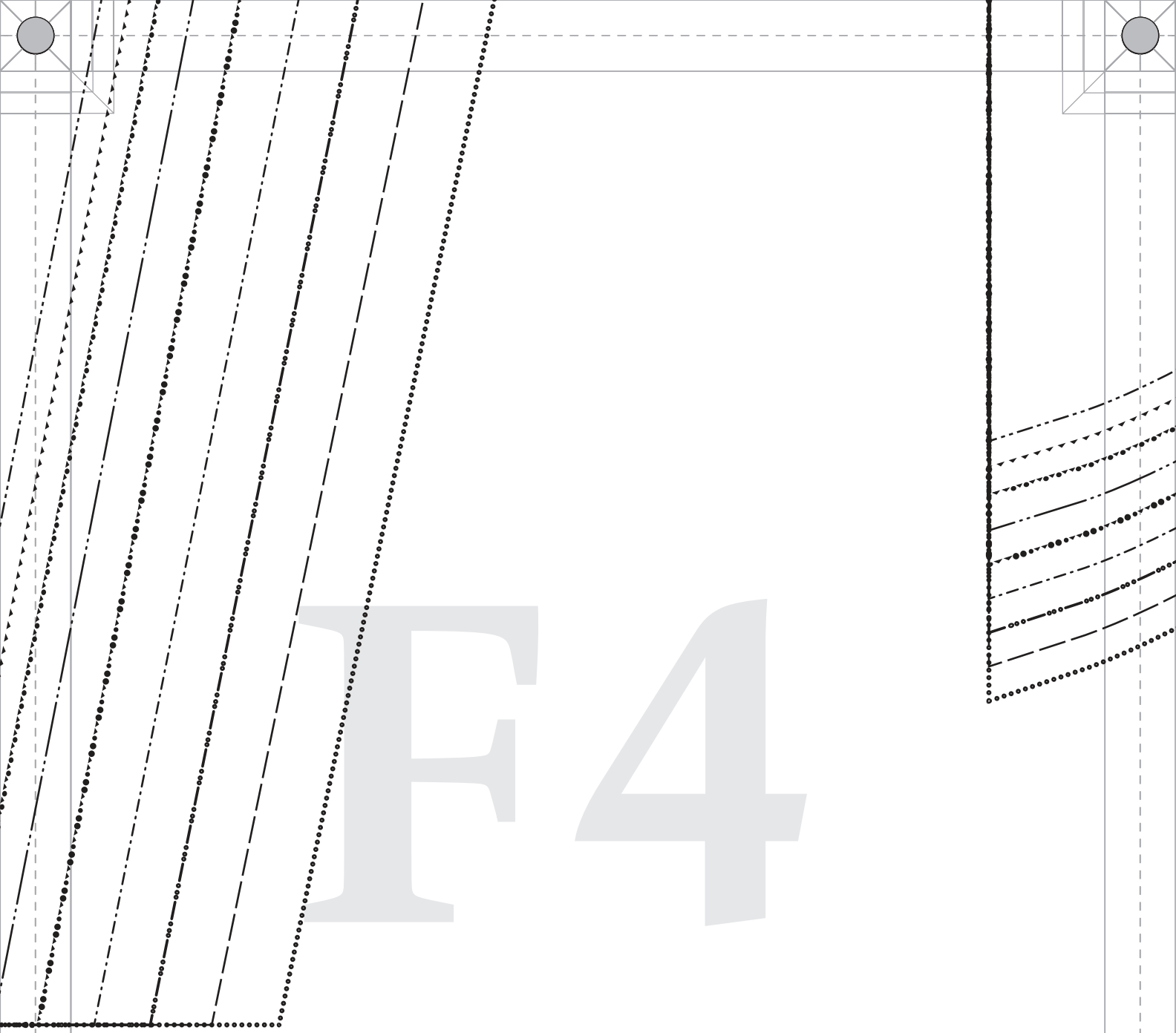
F4

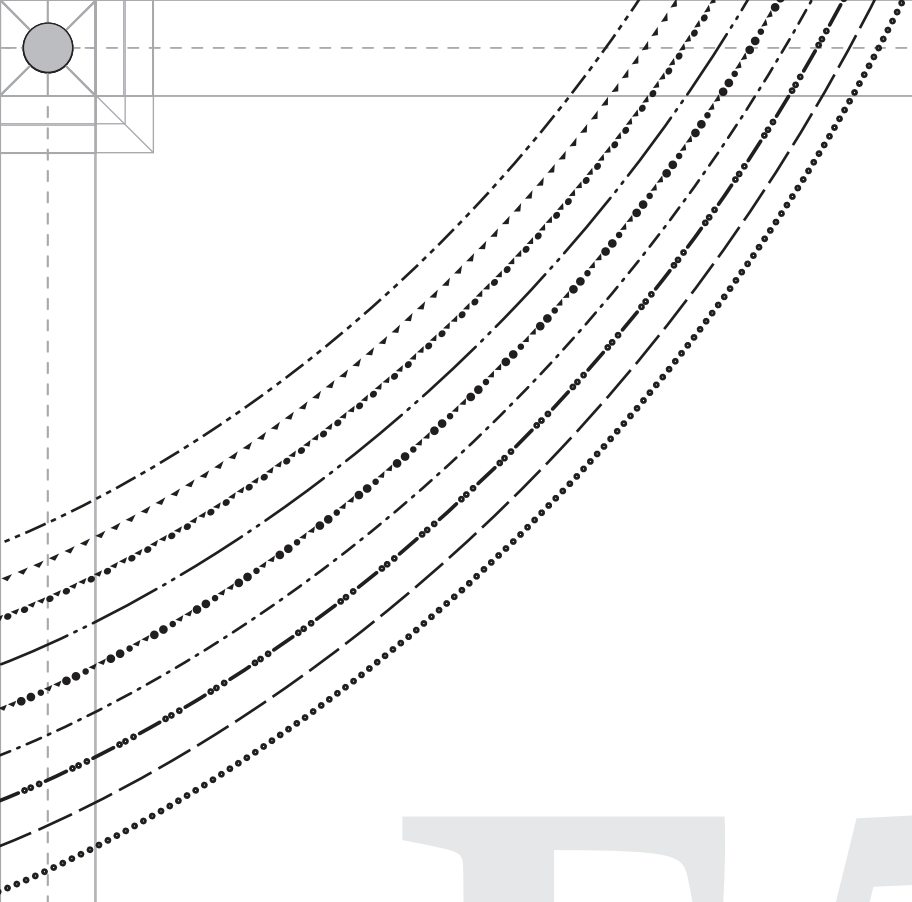

F5

F96

PATTERNS BY mood FABRICS MDF494

PATTERNS BY mood FABRICS MDF494