PATTERNS BY mood FABRICS

MDF487

#MoodForestParkPattern

# "The Forest Park Hoodie"

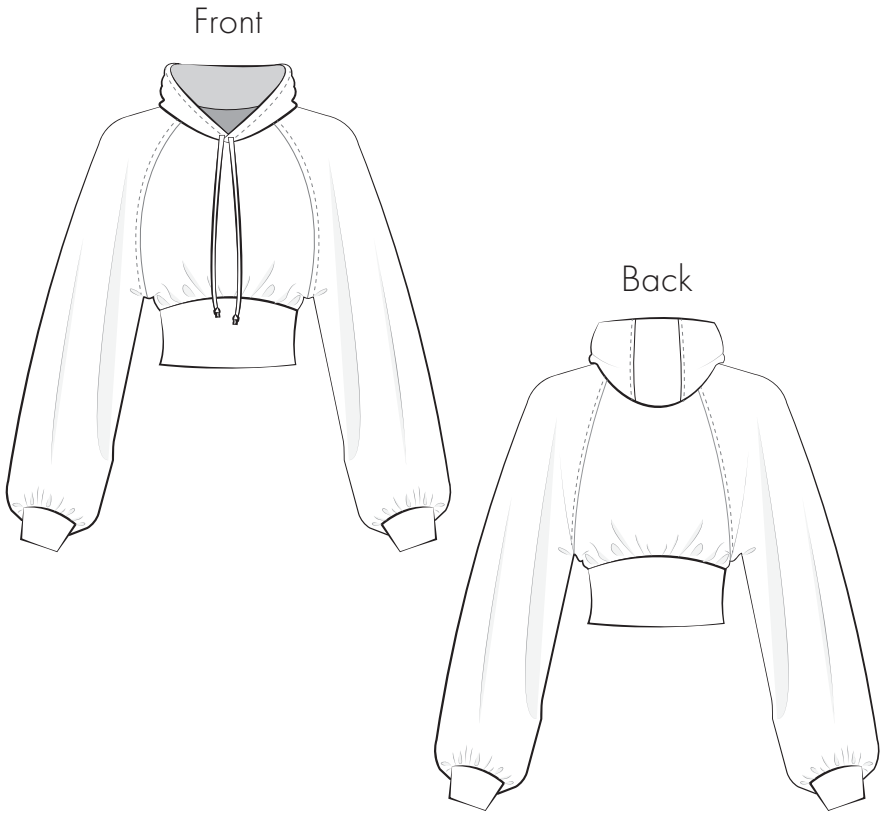


**STOP!**

**Print only this page first to check accuracy. The Mood square above should measure 2 inches. Print "actual size" in "portrait" mode (not auto center). Formatted for both US Letter & A4 paper sizes.**

## Formatted for both US Letter & A4 Paper

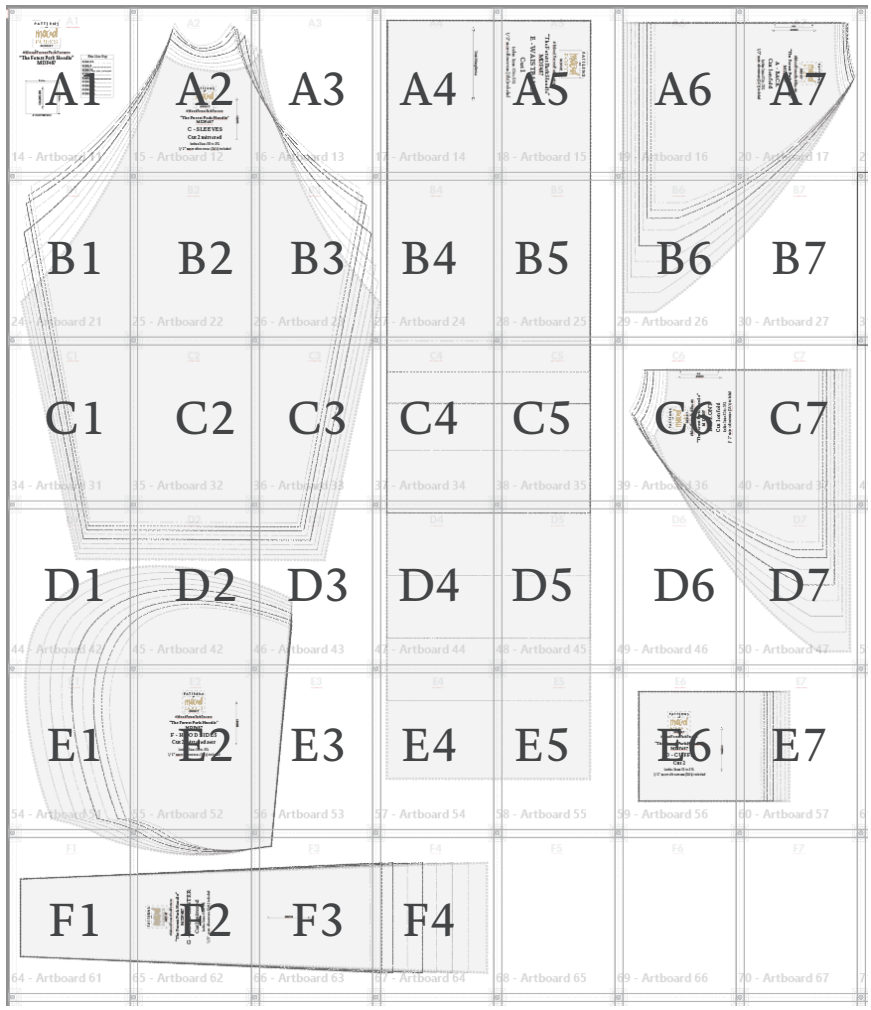


**Trimless Option:**
This is the fastest! No trimming needed! Place left-side margins over right-side margins, overlapping dashed lines and dots. In the same fashion, top margins will overlap bottom margins. Slight unprinted gaps are normal for this method.

**Trimmed Option:**
This removes any unprinted gaps. Trim along the top and right margins at the dashed lines. Overlap the trimmed margins to the untrimmed margins, matching dashed lines and dots.

**Tip!** Build rows first, then join the rows together as you go.

©2025 MoodFabrics.com / MoodSewciety.com
Mass production, resale, or distribution of this pattern in any form is strictly prohibited.

mood SEWCIETY

PATTERNS BY mood FABRICS MDF487

# MDF487 - "The Forest Park Hoodie"

Ladies Sizes XS to 5XL

## BODY MEASUREMENTS - IN INCHES (Chart 1)

| SIZE | XS | S | M | L | XL | 2XL | 3XL | 4XL | 5XL |
|---|---|---|---|---|---|---|---|---|---|
| BUST | 31 - 32 | 33 - 34 | 35 - 36 | 37 - 39 | 40 - 43 | 44 - 47 | 48 - 51 | 52 - 55 | 56 - 60 |
| WAIST | 23 - 24 | 25 - 26 | 27 - 28 | 29 - 31 | 32 - 35 | 36 - 39 | 40 - 43 | 44 - 47 | 48 - 52 |
| HIPS | 34 - 35 | 36 - 37 | 38 - 39 | 40 - 42 | 43 - 46 | 47 - 50 | 51 - 54 | 55 - 58 | 59- 63 |

## APPROXIMATE FINISHED GARMENT MEASUREMENTS - IN INCHES (Chart 2)

| SIZE | XS | S | M | L | XL | 2XL | 3XL | 4XL | 5XL |
|---|---|---|---|---|---|---|---|---|---|
| BUST | 42 | 44 | 46 | 49 | 53 | 57 | 61 | 65 | 70 |
| WAIST | 42 | 44 | 46 | 49 | 53 | 57 | 61 | 65 | 70 |
| LENGTH* | 18.75 | 19 | 19.25 | 19.5 | 19.75 | 20 | 20.25 | 20.5 | 20.75 |

*Designed for stretch fabrics. Size guide is based on the suggested design and wearing ease for this style. There is negative ease for the waistband due to the stretch of the fabric. You can also choose the size according to your desired finished garment measurements, blending between sizes as needed. For best results, sew a test garment in a similar fabric to adjust your pattern.

**Recommended Fabric:** French Terry, Ponte Knit.

We love creating these free patterns for the community and we want to keep them free! In return, we hope you check out MoodFabrics.com for your next project!

Want to use one of our patterns to make a garment to sell? Our patterns are royalty-free! We just ask that you credit us with:
MoodSewciety.com
or
MoodFabrics.com
in your product description.

FOR SEWING INSTRUCTIONS AND MORE INFORMATION:
Scan the QR code or visit MoodSewciety.com and search "MDF487"

1/2" seam allowances (SA's) included unless stated otherwise.

REMEMBER TO SHARE YOUR MADE WITH MOOD LOOK!

Tag us and use:
**#MoodForestParkPattern**
for a shot at being featured on our social media

@mood.fabrics
@moodfabrics
@Mood_Fabrics
@moodfabrics
@moodfabrics

©2025 MoodFabrics.com / MoodSewciety.com
Mass production, resale, or distribution of this pattern in any form is strictly prohibited.

mood SEWCIETY

♥ The Mood Sewciety Team

PATTERNS BY mood FABRICS MDF487

# "The Forest Park Hoodie"

## PATTERN PIECES

| | |
|---|---|
| A | **BACK**<br>FABRIC - CUT 1 ON FOLD |
| B | **FRONT**<br>FABRIC - CUT 1 MIRRORED |
| C | **SLEEVES**<br>FABRIC - CUT 2 MIRRORED |
| D | **CUFFS**<br>FABRIC - CUT 2 |
| E | **WAISTBAND**<br>FABRIC - CUT 1 |
| F | **HOOD SIDES**<br>FABRIC - CUT 2 MIRRORED SETS |
| G | **HOOD CENTER**<br>FABRIC - CUT 2 |

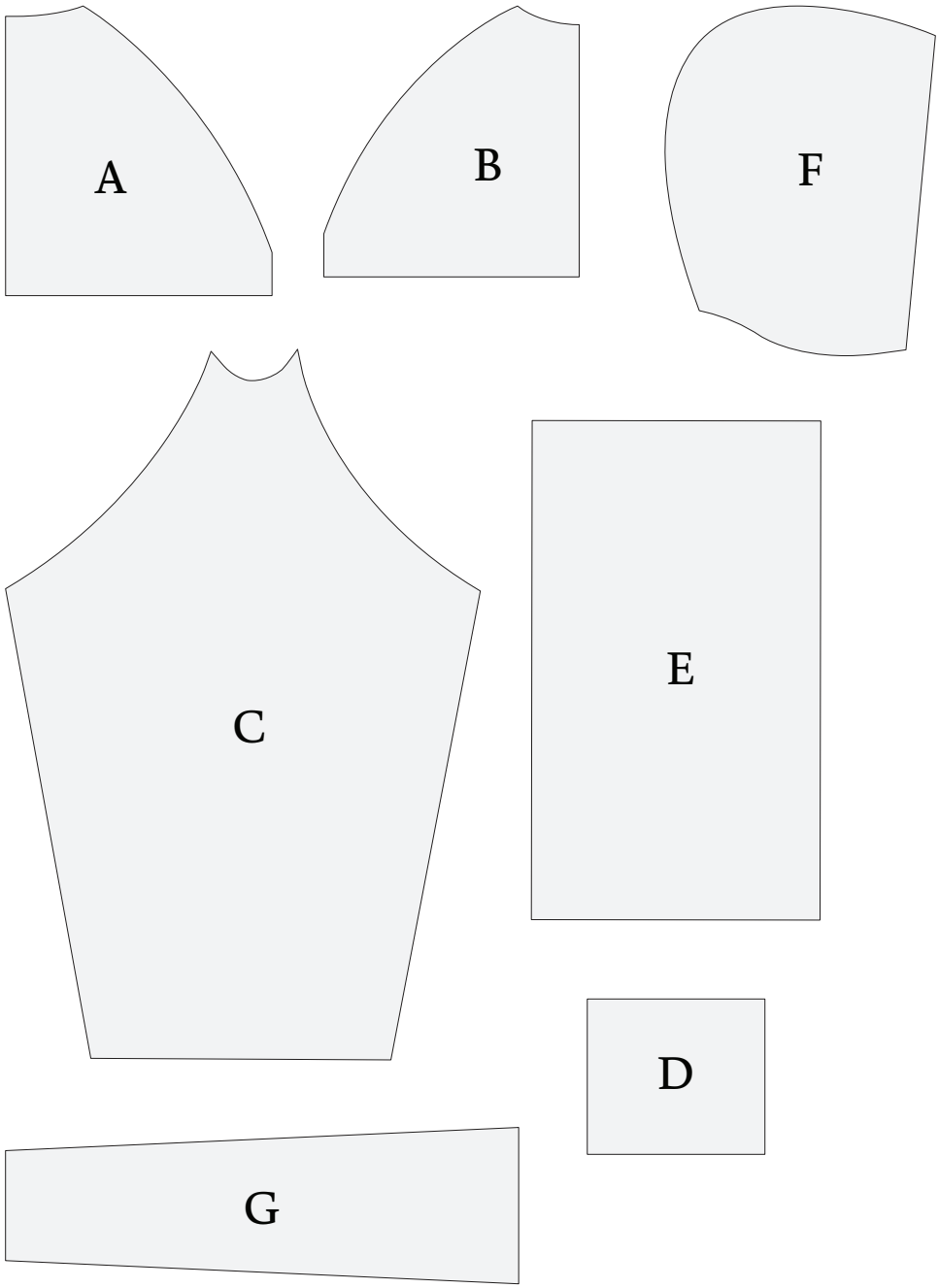


©2025 MoodFabrics.com / MoodSewciety.com
Mass production, resale, or distribution of this pattern in any form is strictly prohibited.
mood SEWCIETY

PATTERNS BY mood FABRICS

MDF487

#MoodForestParkPattern

# “The Forest Park Hoodie”
# MDF487

| Size Line Key |
| --- |
| SIZE XS |
| SIZE S |
| SIZE M |
| SIZE L |
| SIZE XL |
| SIZE 2XL |
| SIZE 3XL |
| SIZE 4XL |
| SIZE 5XL |

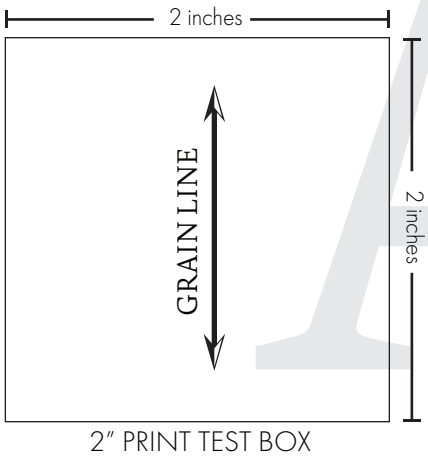


2” PRINT TEST BOX

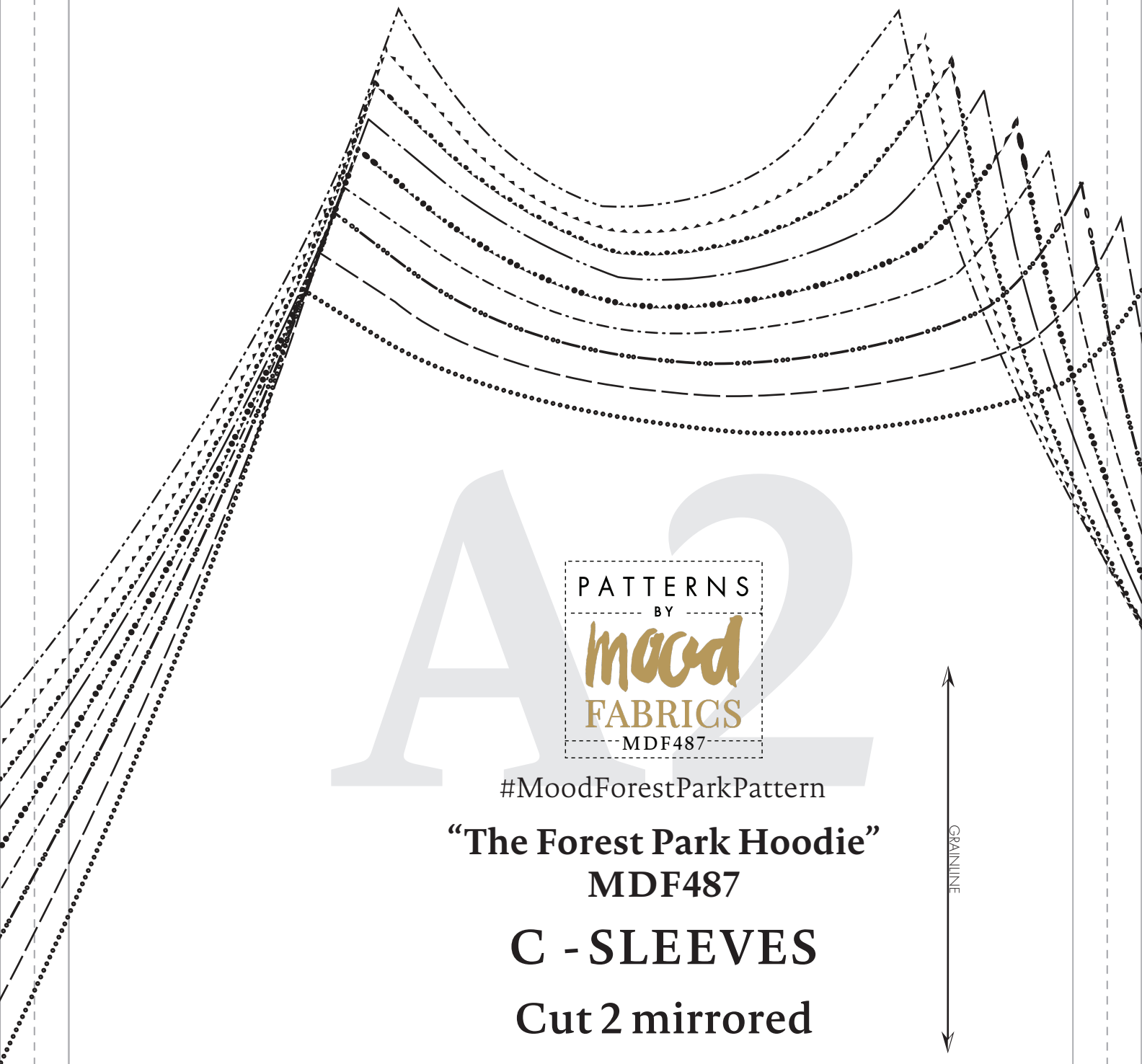

PATTERNS BY mood FABRICS MDF487

#MoodForestParkPattern

# "The Forest Park Hoodie" MDF487

## C - SLEEVES

### Cut 2 mirrored

GRAINLINE

Ladies Sizes XS to 5XL

1/2" seam allowances (SA's) included

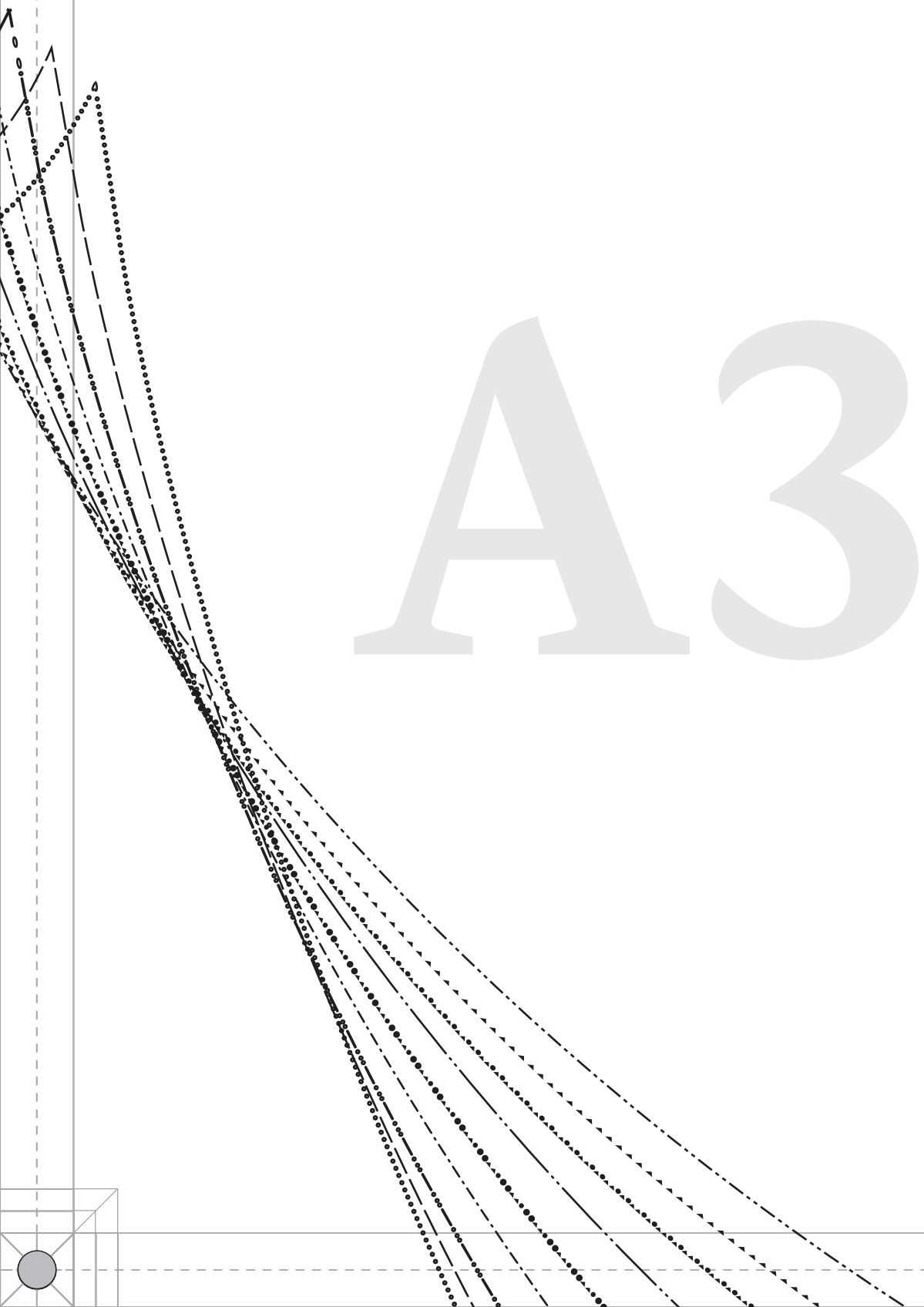
A3




A4

PATTERNS BY mood FABRICS MDF487

#MoodForestParkPattern

# "The Forest Park Hoodie" MDF487

# E - WAISTBAND

## Cut 1

Ladies Sizes XS to 5XL

1/2" seam allowances (SA's) included

A6

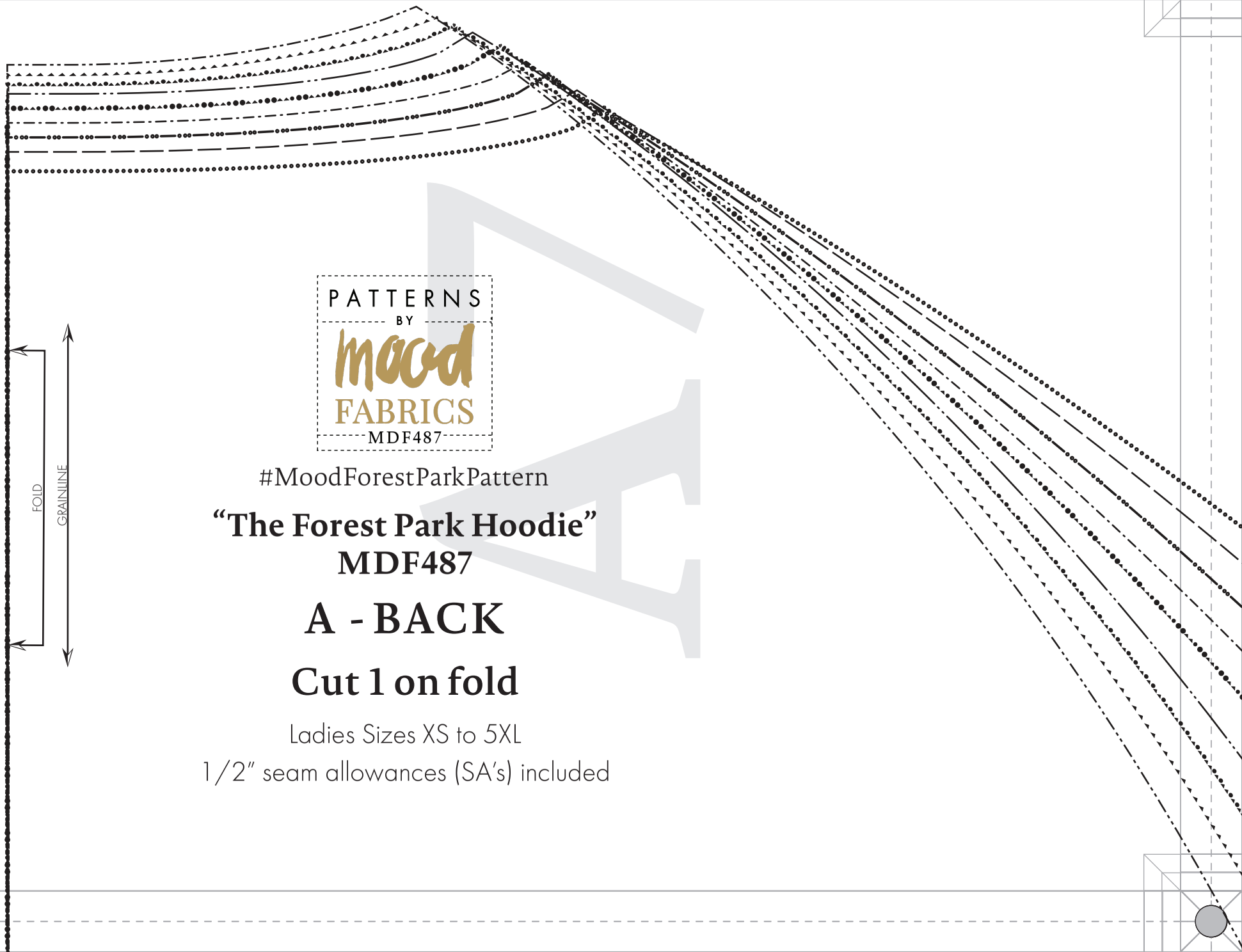


PATTERNS BY mood FABRICS

MDF487

#MoodForestParkPattern

# "The Forest Park Hoodie"
# MDF487

## A - BACK

## Cut 1 on fold

Ladies Sizes XS to 5XL

1/2" seam allowances (SA's) included

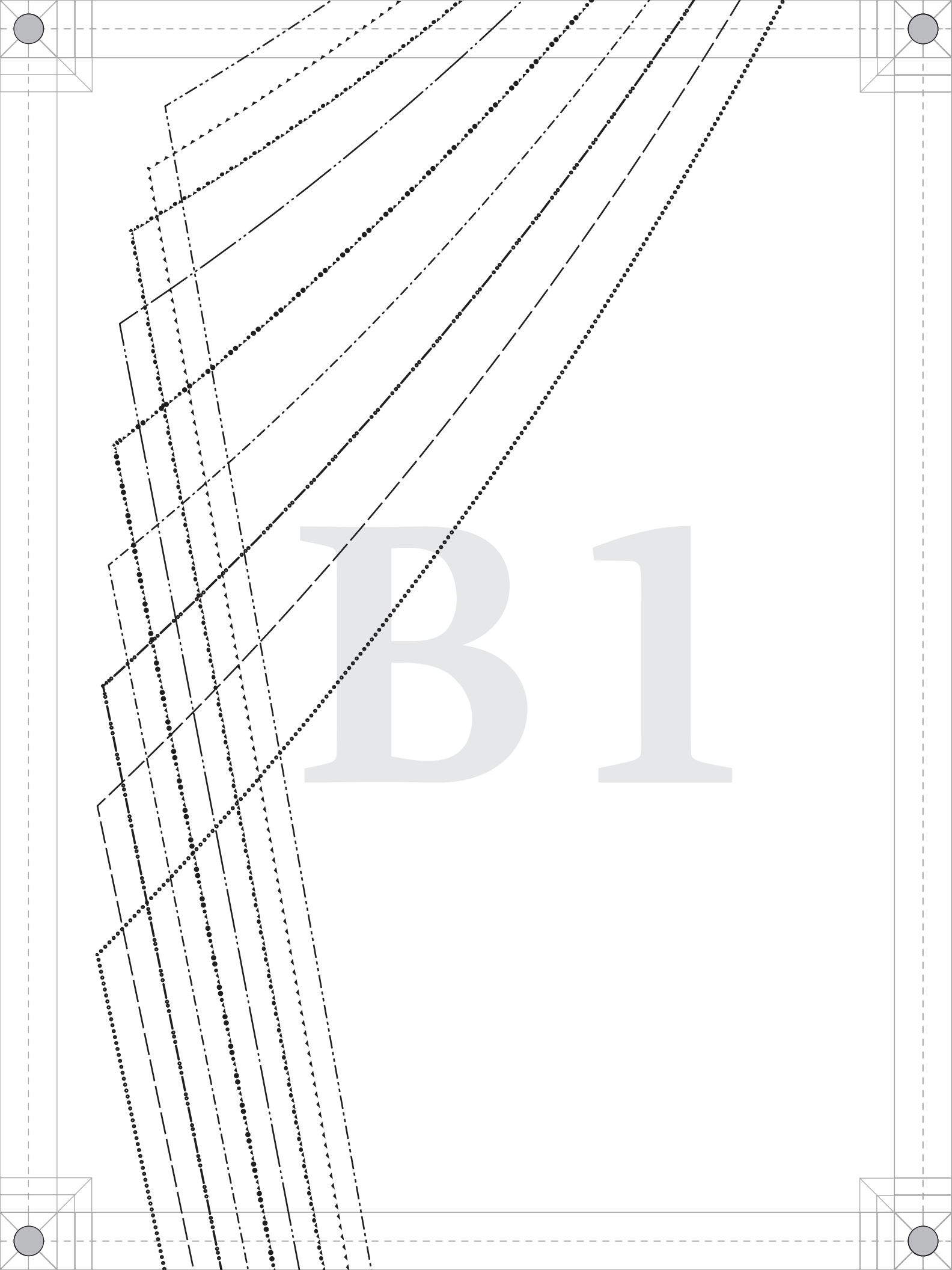
B1

B2

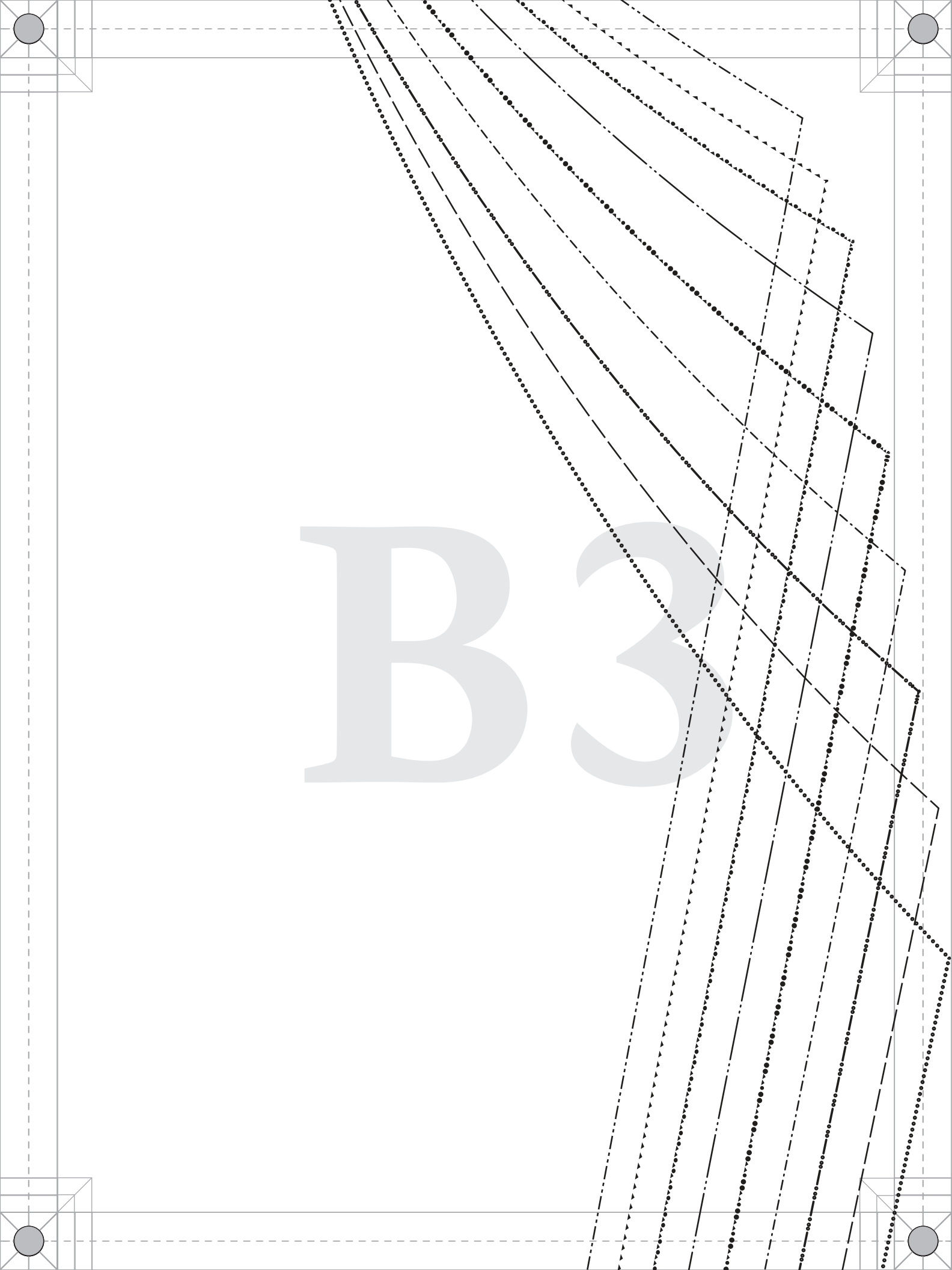
B3

B4

B5

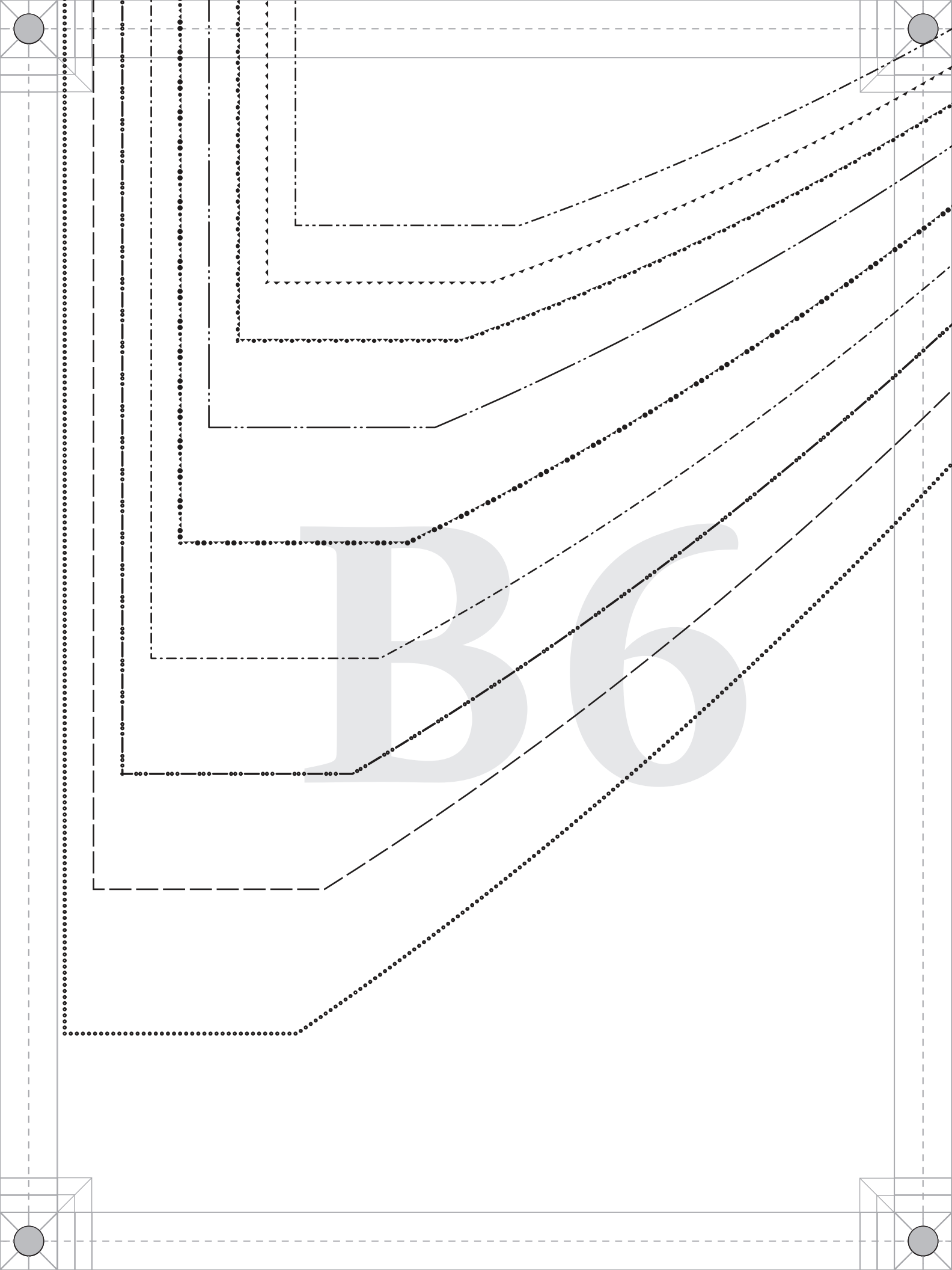
B6

B7

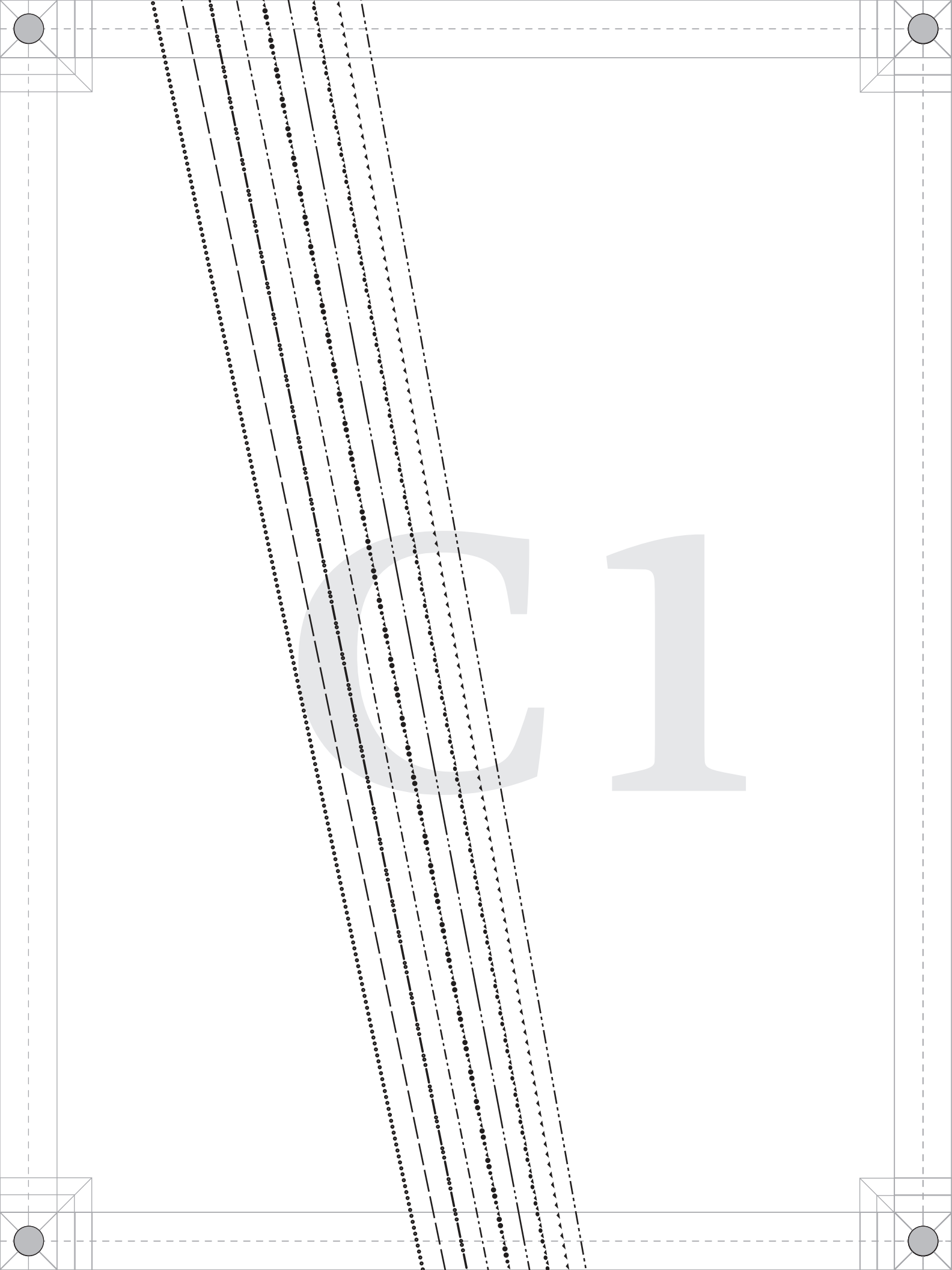
C1

C2

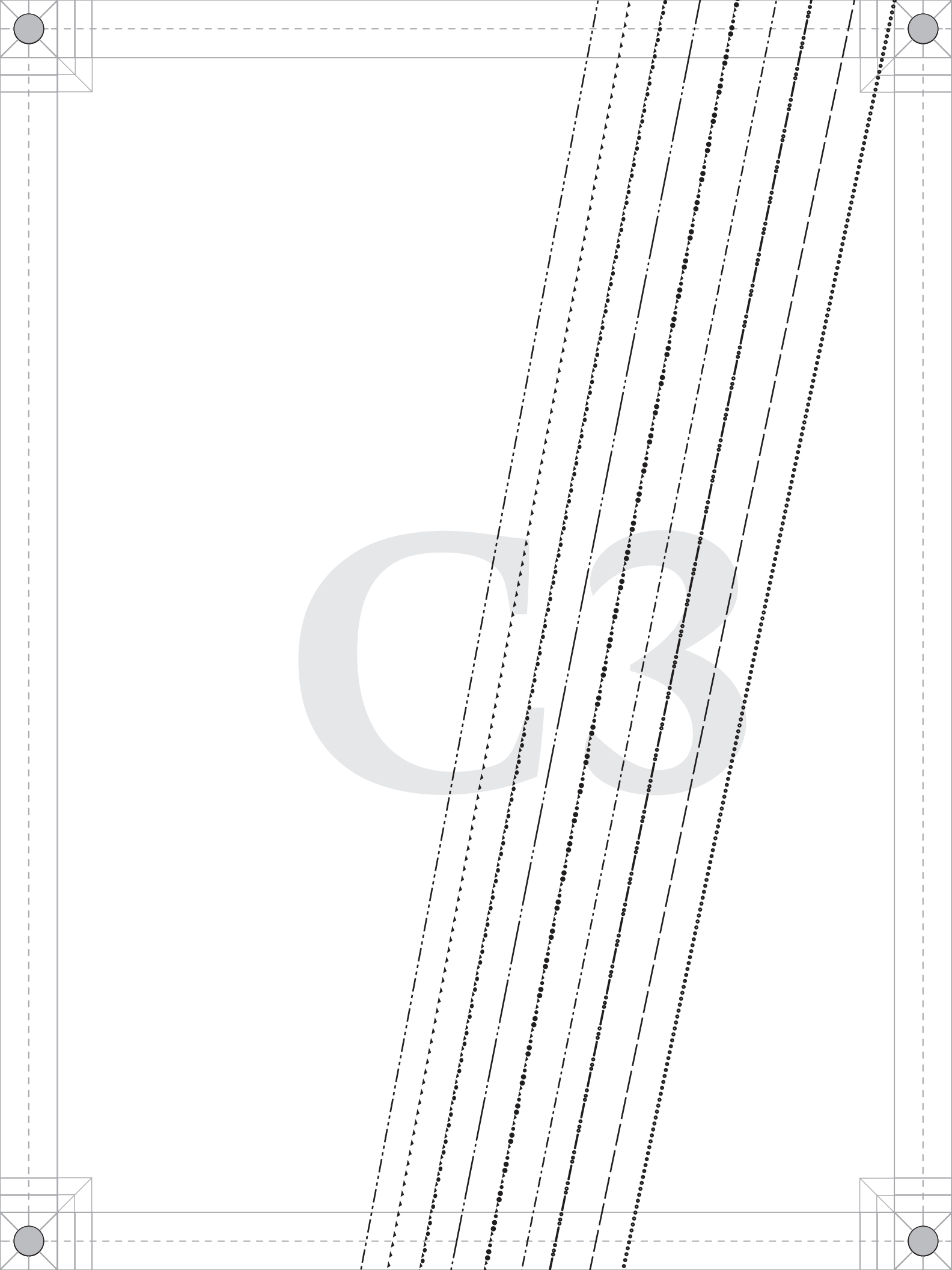
03

C4

C5



PATTERNS BY mood FABRICS MDF487

#MoodForestParkPattern

# "The Forest Park Hoodie" MDF487

# B - FRONT

## Cut 1 on fold

Ladies Sizes XS to 5XL

1/2" seam allowances (SA's) included

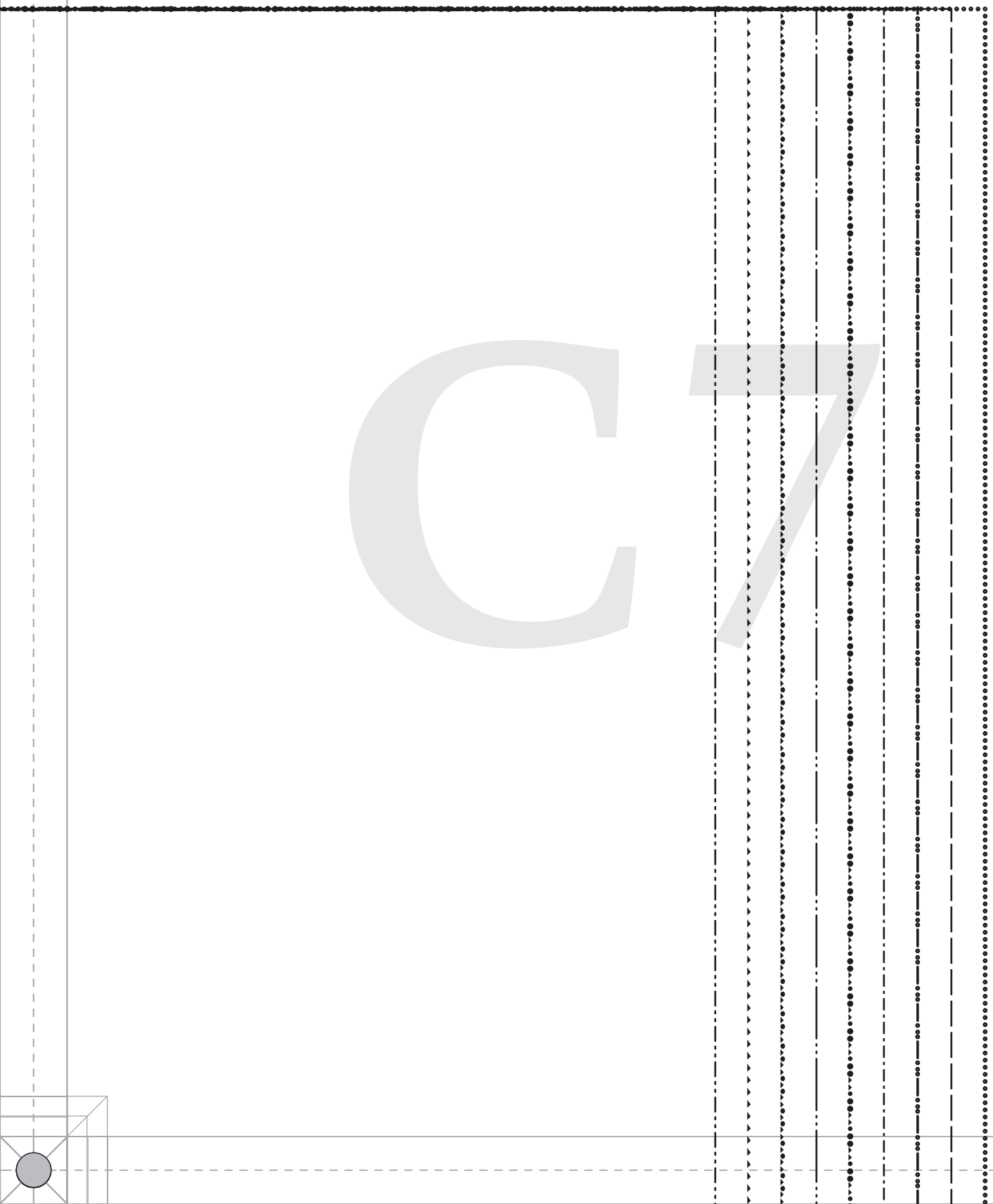
C#

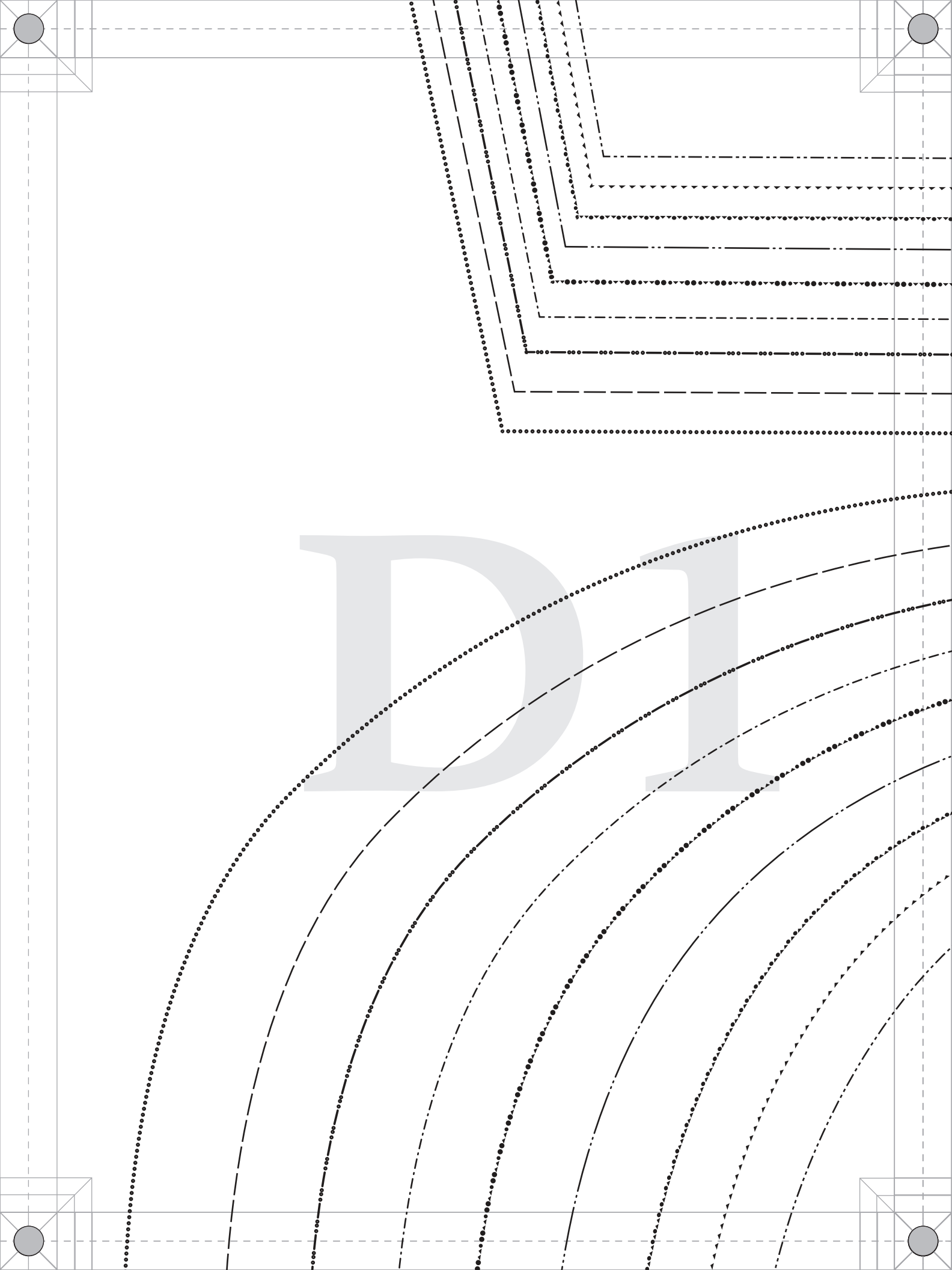

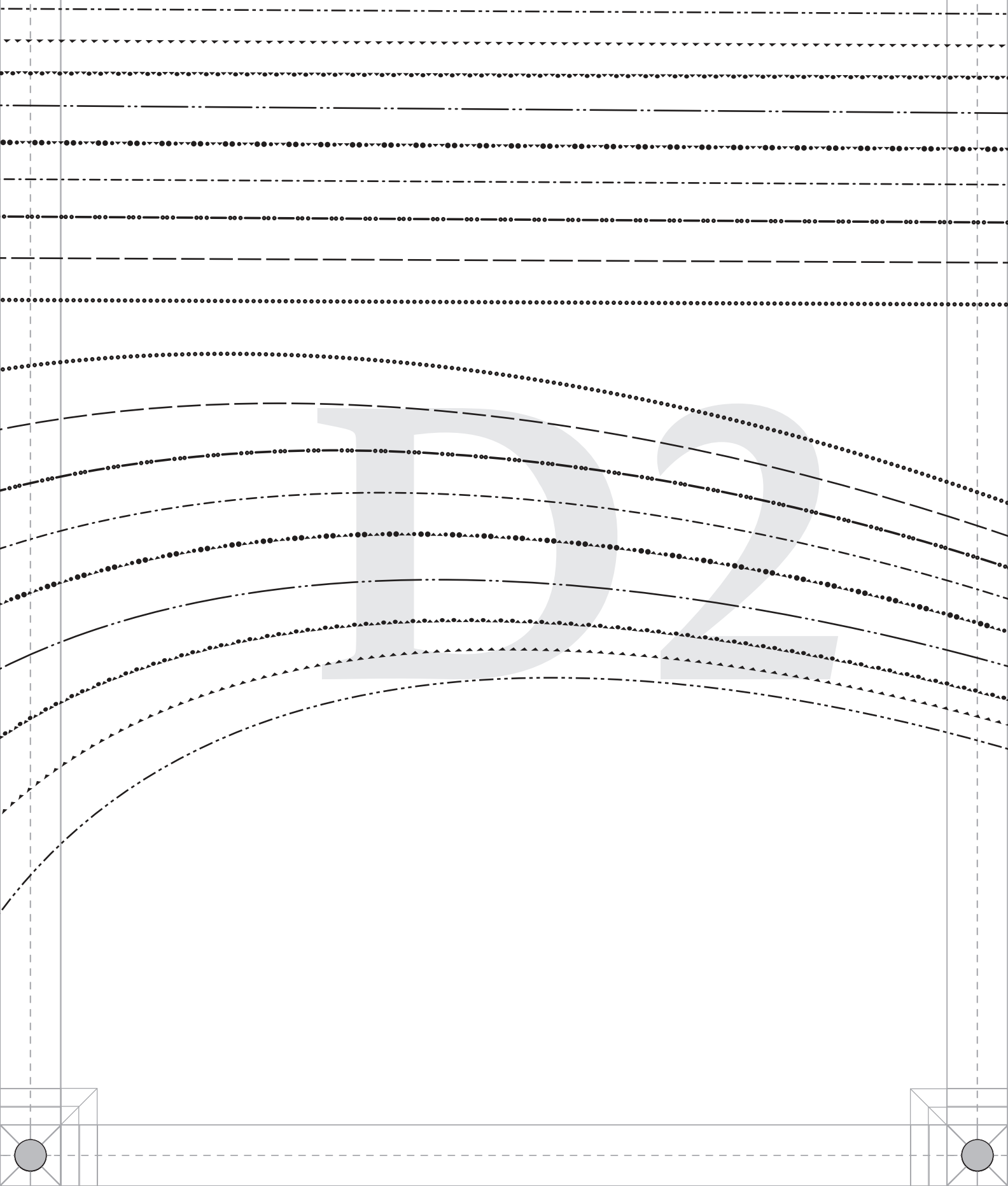
D2

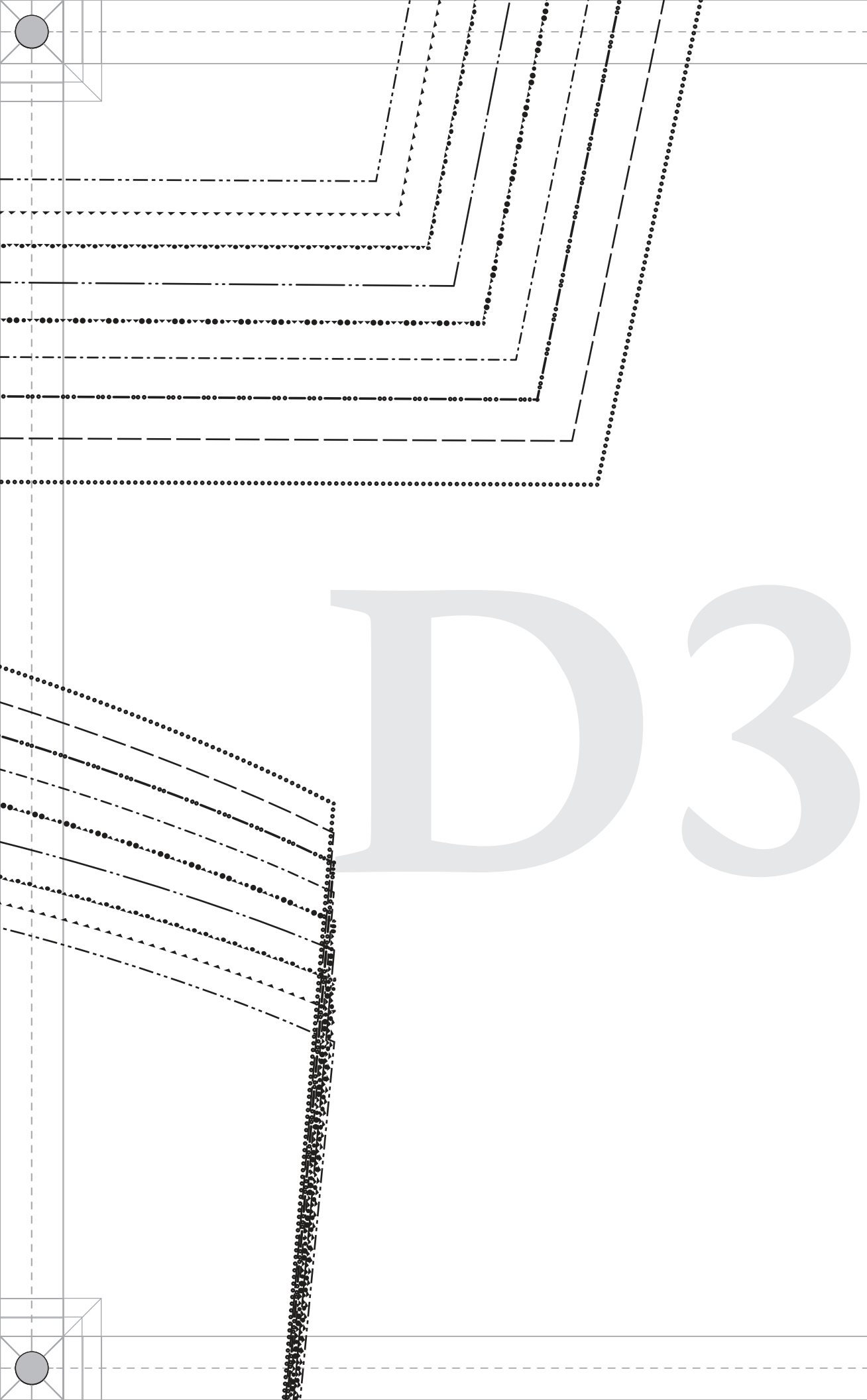

D4

D5

D6

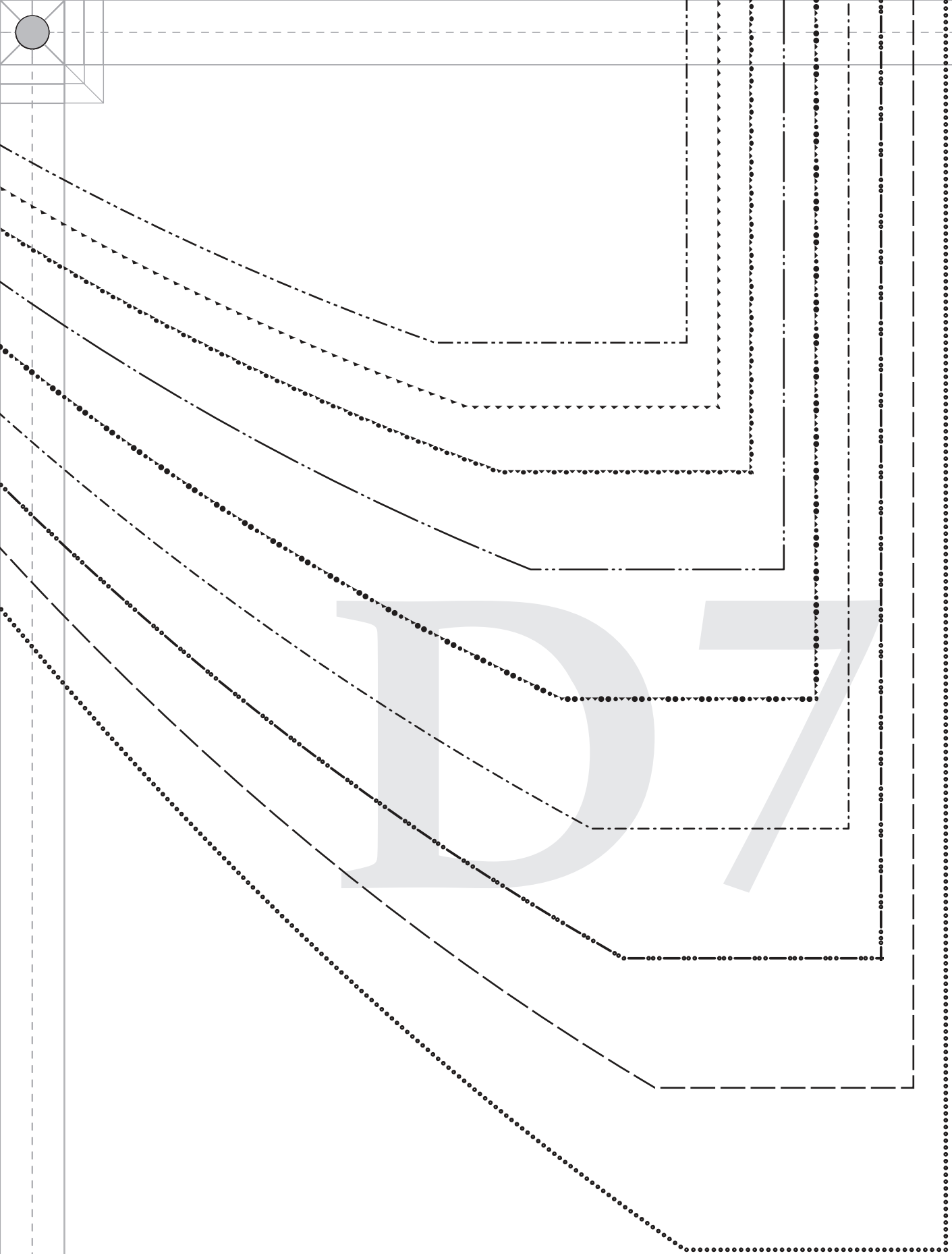
D7

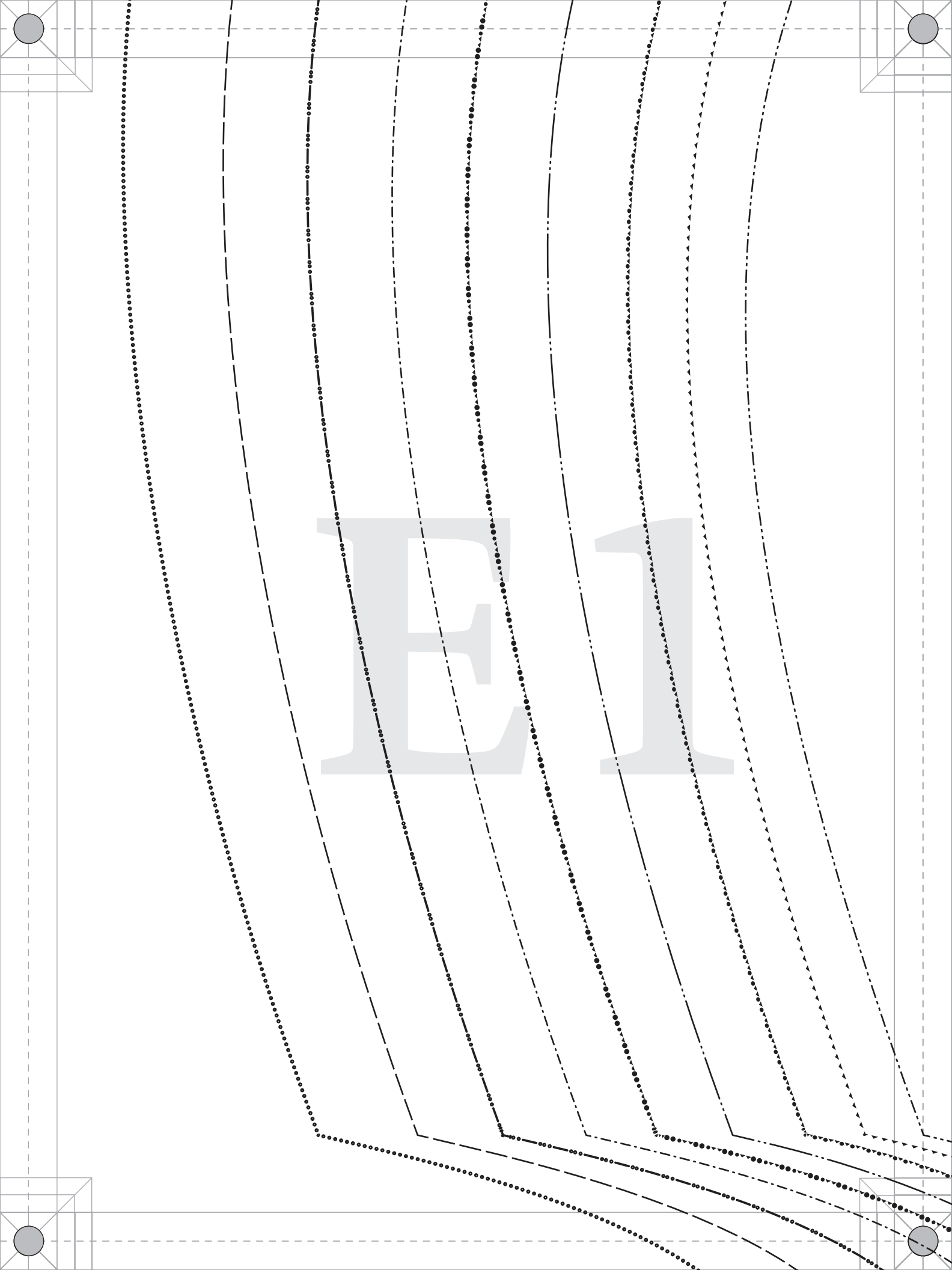
E1

PATTERNS BY mood FABRICS MDF487

#MoodForestParkPattern

# "The Forest Park Hoodie" MDF487

# F - HOOD SIDES

## Cut 2 mirrored sets

Ladies Sizes XS to 5XL

1/2" seam allowances (SA's) included




E2

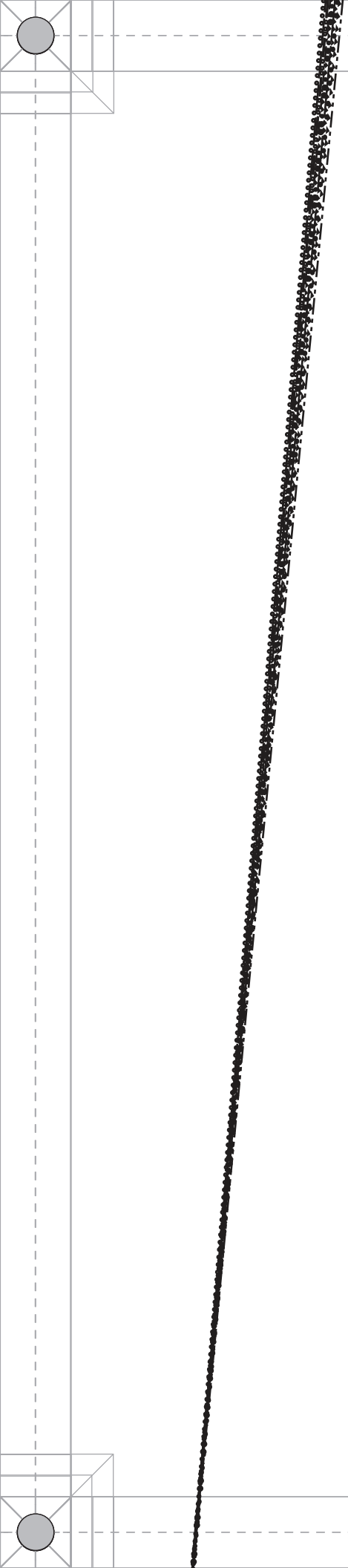

E3

E4

E5

PATTERNS BY mood FABRICS

MDF487

#MoodForestParkPattern

# "The Forest Park Hoodie"
# MDF487

# D - CUFFS

## Cut 2

Ladies Sizes XS to 5XL

1/2" seam allowances (SA's) included



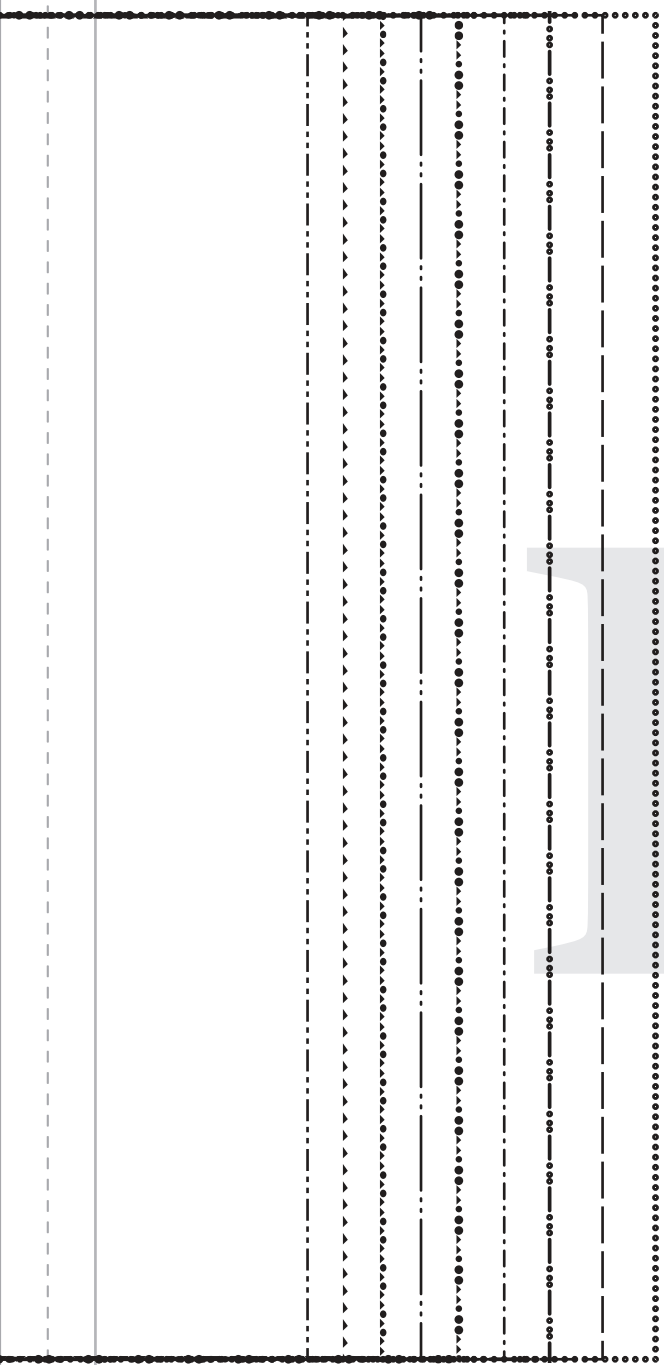


F1

PATTERNS BY mood FABRICS MDF487

#MoodForestParkPattern

**“The Forest Park Hoodie”**
**MDF487**

# G - HOOD CENTER

## Cut 2

Ladies Sizes XS to 5XL
1/2″ seam allowances (SA’s) included

F3



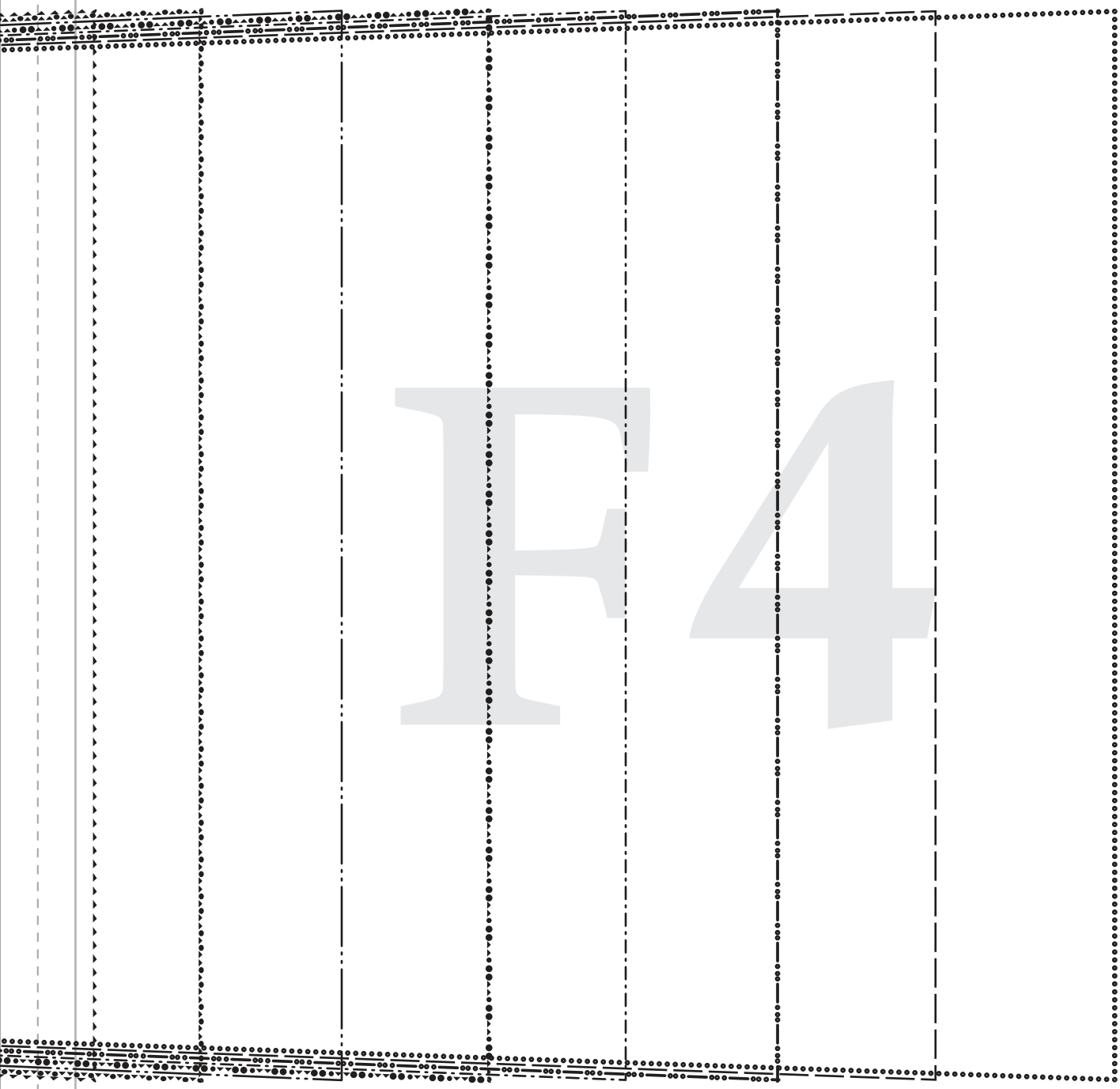
F4