PATTERNS BY mood FABRICS

MDF483

#MoodGlacialPattern

"The Glacial Duster Coat"



STOP!

Print only this page first to check accuracy. The Mood square above should measure 2 inches. Print "actual size" in "portrait" mode (not auto center). Formatted for both US Letter & A4 paper sizes.

Formatted for both US Letter & A4 Paper

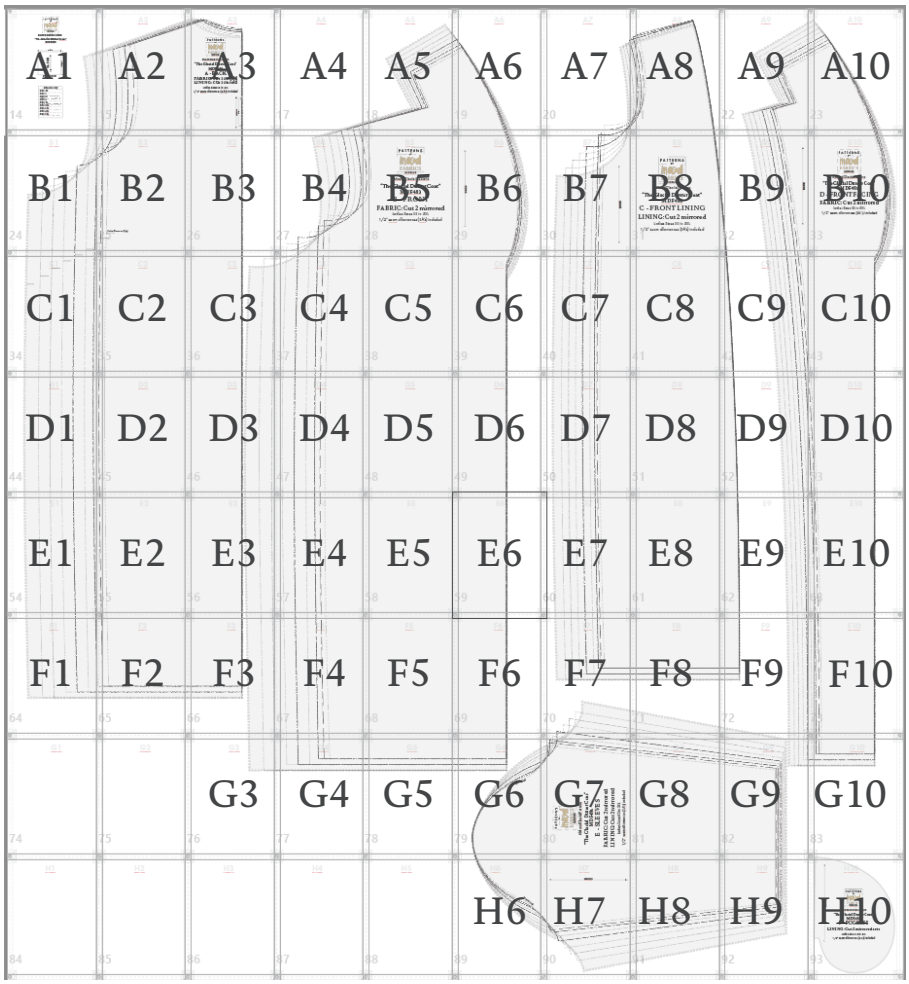

Trimless Option:
This is the fastest! No trimming needed! Place left-side margins over right-side margins, overlapping dashed lines and dots. In the same fashion, top margins will overlap bottom margins. Slight unprinted gaps are normal for this method.

Trimmed Option:
This removes any unprinted gaps. Trim along the top and right margins at the dashed lines. Overlap the trimmed margins to the untrimmed margins, matching dashed lines and dots.

Tip! Build rows first, then join the rows together as you go.

©2025 MoodFabrics.com / MoodSewciety.com
Mass production, resale, or distribution of this pattern in any form is strictly prohibited.

mood SEWCIETY

#MoodGlacialPattern

PATTERNS BY mood FABRICS MDF483

MDF483 - "The Glacial Duster Coat"

Ladies Sizes XS to 5XL

BODY MEASUREMENTS - IN INCHES (Chart 1)

SIZE	XS	S	M	L	XL	2XL	3XL	4XL	5XL
BUST	31- 32	33 - 34	35 - 36	37 - 39	40 - 43	44 - 47	48 - 51	52 - 55	56 - 60
WAIST	23 - 24	25 - 26	27 - 28	29 - 31	32 - 35	36 - 39	40 - 43	44 - 47	48 - 52
HIPS	34 - 35	36 - 37	38 - 39	40 - 42	43 - 46	47 - 50	51 - 54	55 - 58	59 - 63

APPROXIMATE FINISHED GARMENT MEASUREMENTS - IN INCHES (Chart 2)

SIZE	XS	S	M	L	XL	2XL	3XL	4XL	5XL
BUST*	46	48	50	53	57	61	65	69	74
WAIST*	47	49	51	54	58	62	66	70	75
LENGTH**	55	55	55	55.5	55.5	55.5	56	56	56

*The bust and waist circumference measurements do not include the overlap for the coat closure.

**Ankle length for standard (regular) sizes. You can adjust the length according to your preference or needs. Reduce 2 inches for petite sizes or add 3 inches for tall sizes.

Size guide is based on the suggested design & wearing ease for this style. You can also choose the size according to your desired finished garment measurements, blending between sizes as needed. Measure the printed patterns to make sure the dimensions are according to the desired fitting and adjust if needed before cutting the fabric. For best results sew a test garment in a similar fabric to adjust your pattern.

Recommended Fabric: Main Fabric: Polyester Faux Fur, Cashmere.
Lining: Bemberg Lining.

We love creating these free patterns for the community and we want to keep them free! In return, we hope you check out MoodFabrics.com for your next project!

Want to use one of our patterns to make a garment to sell? Our patterns are royalty-free! We just ask that you credit us with:
MoodSewciety.com
or
MoodFabrics.com
in your product description.

FOR SEWING INSTRUCTIONS AND MORE INFORMATION:
Scan the QR code or visit MoodSewciety.com and search "MDF483"

1/2" seam allowances (SA's) included unless stated otherwise.

REMEMBER TO SHARE YOUR MADE WITH MOOD LOOK!

Tag us and use:
#MoodGlacialPattern
for a shot at being featured on our social media

@mood.fabrics
@moodfabrics
@Mood_Fabrics
@moodfabrics
@moodfabrics

©2025 MoodFabrics.com / MoodSewciety.com
Mass production, resale, or distribution of this pattern in any form is strictly prohibited.

mood SEWCIETY

♥ The Mood Sewciety Team

PATTERNS BY mood FABRICS MDF483

#MoodGlacialPattern

"The Glacial Duster Coat"

PATTERN PIECES

A	**BACK** FABRIC - CUT 1 ON FOLD LINING - CUT 1 ON FOLD
B	**FRONT** FABRIC - CUT 2 MIRRORED
C	**FRONT LINING** LINING - CUT 2 MIRRORED
D	**FRONT FACING** FABRIC - CUT 2 MIRRORED
E	**SLEEVES** FABRIC - CUT 2 MIRRORED LINING - CUT 2 MIRRORED
F	**POCKETS** LINING - CUT 2 MIRRORED SETS

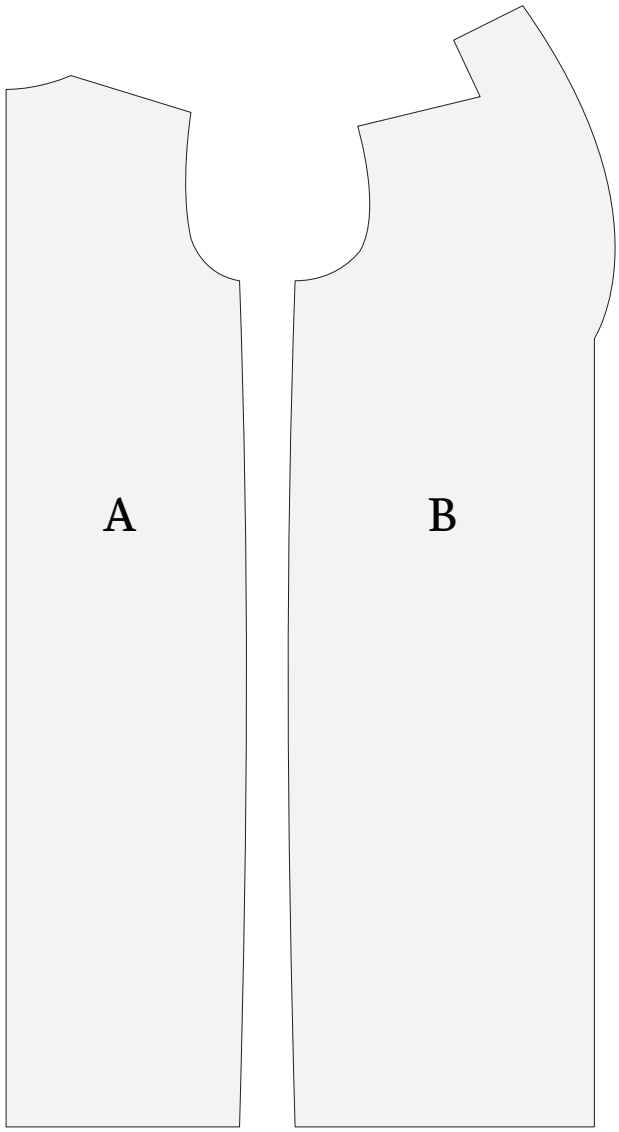

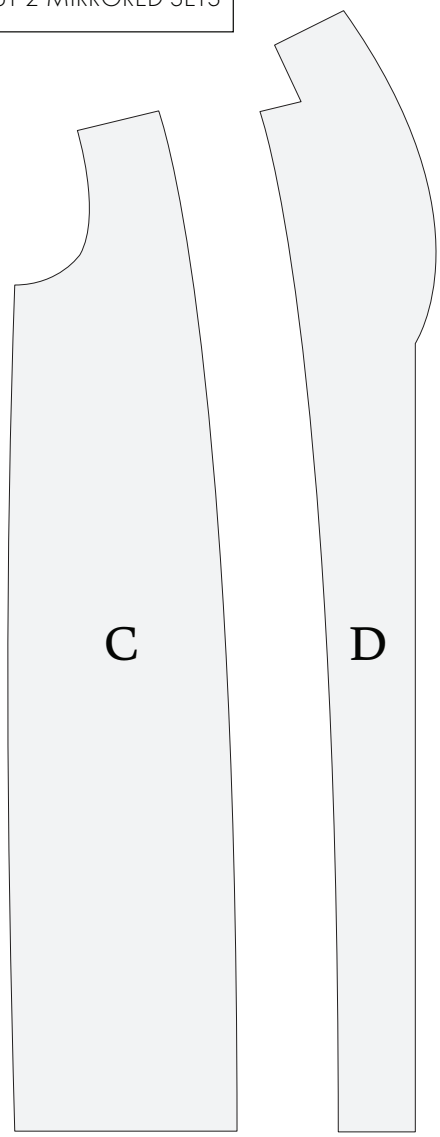

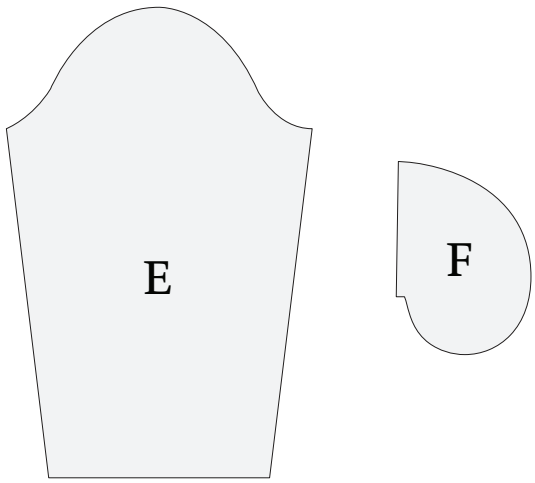

©2025 MoodFabrics.com / MoodSewciety.com
Mass production, resale, or distribution of this pattern in any form is strictly prohibited.

mood SEWCIETY

PATTERNS BY mood FABRICS MDF483

#MoodGlacialPattern

"The Glacial Duster Coat"
MDF483

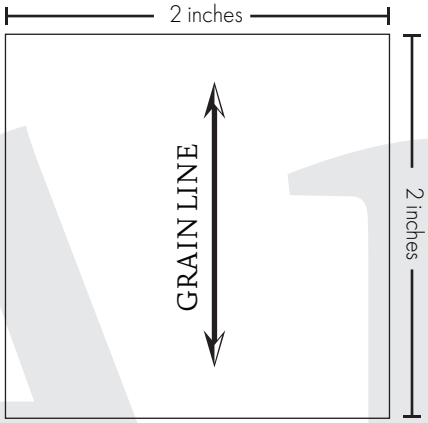

2" PRINT TEST BOX

A1

Size Line Key
SIZE XS
SIZE S
SIZE M
SIZE L
SIZE XL
SIZE 2XL
SIZE 3XL
SIZE 4XL
SIZE 5XL

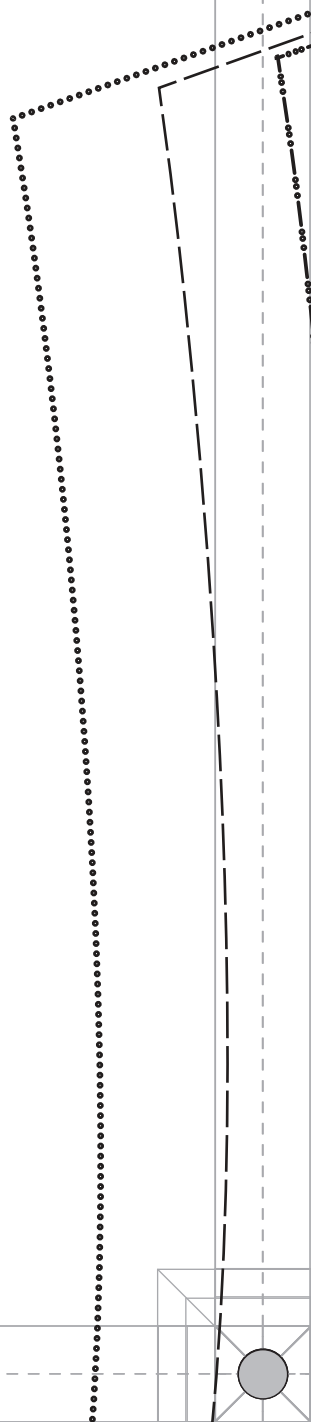

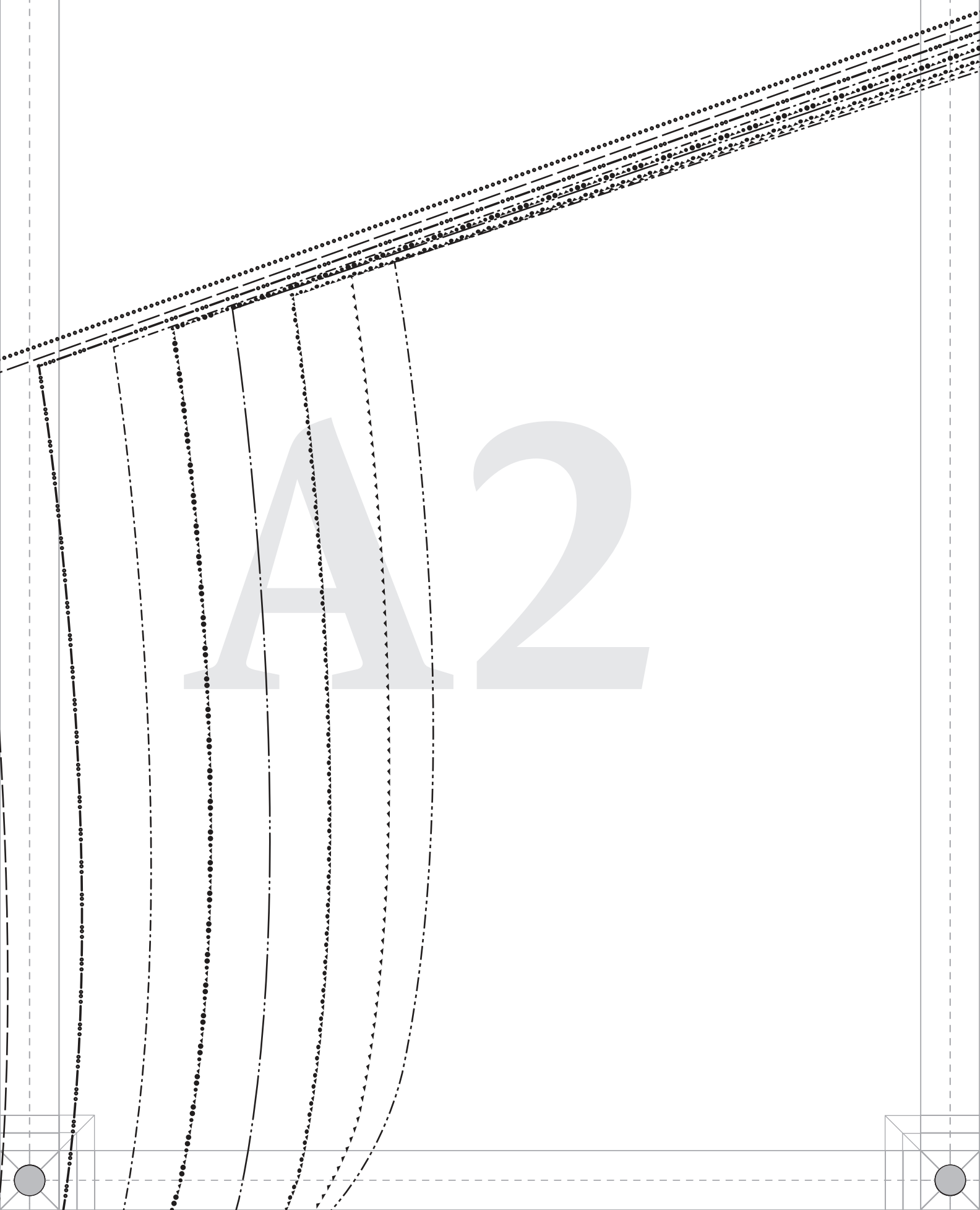
A2

PATTERNS BY mood FABRICS MDF483

#MoodGlacialPattern

"The Glacial Duster Coat"
MDF483
A - BACK
FABRIC: Cut 1 on fold
LINING: Cut 1 on fold

Ladies Sizes XS to 5XL

1/2" seam allowances (SA's) included



A4

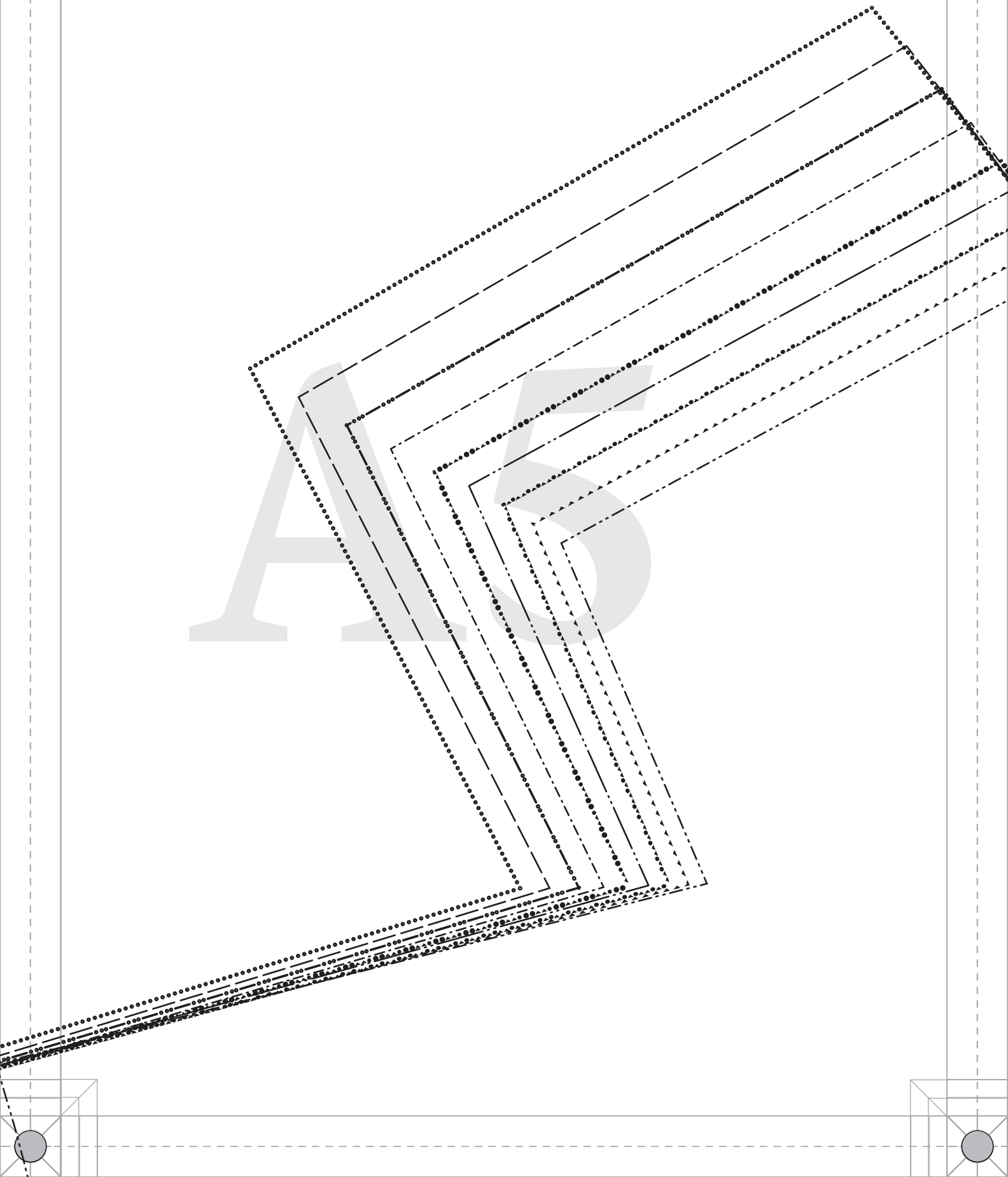

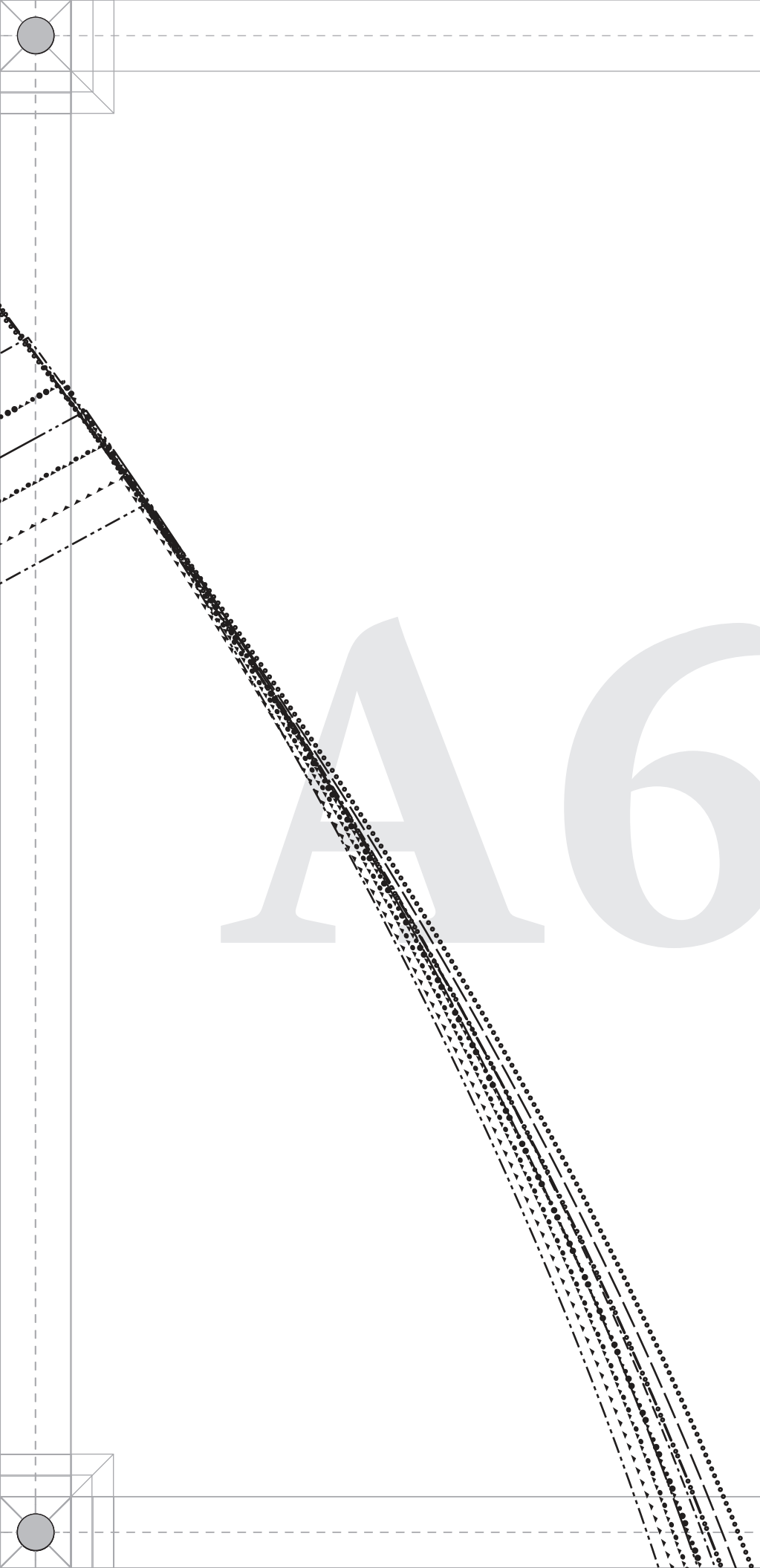
A6

A7

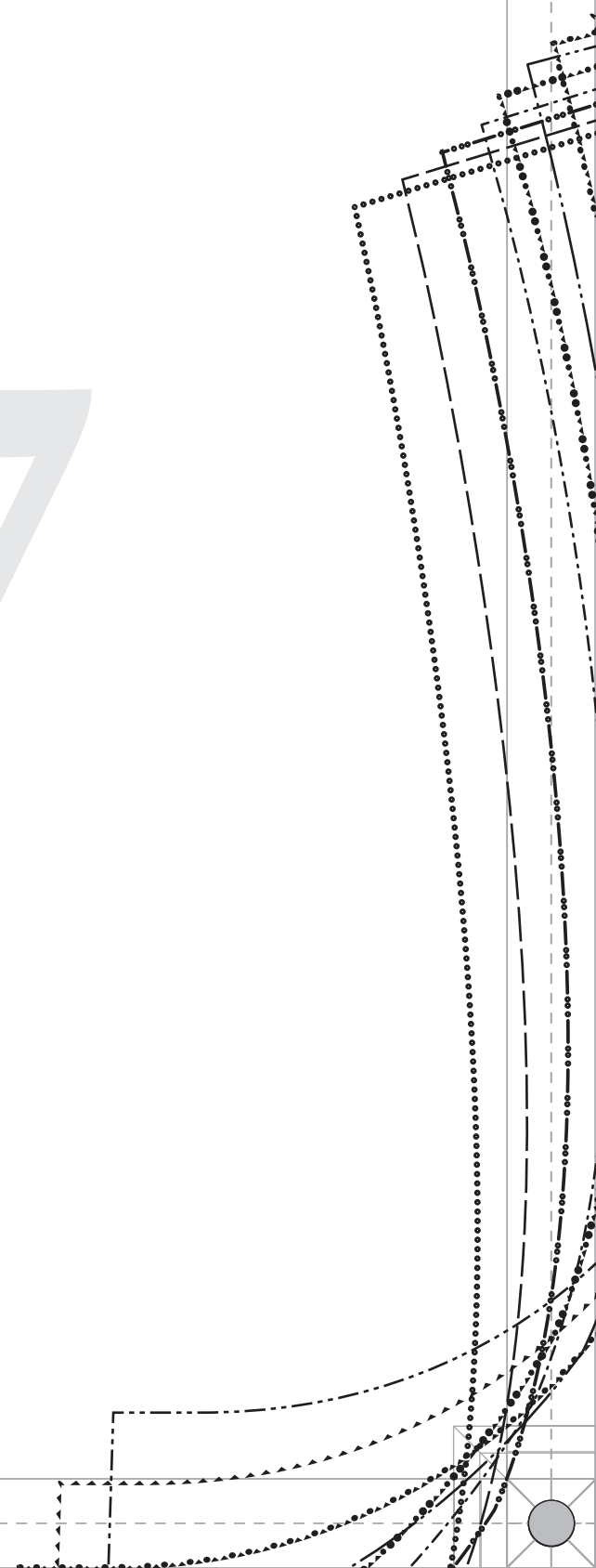

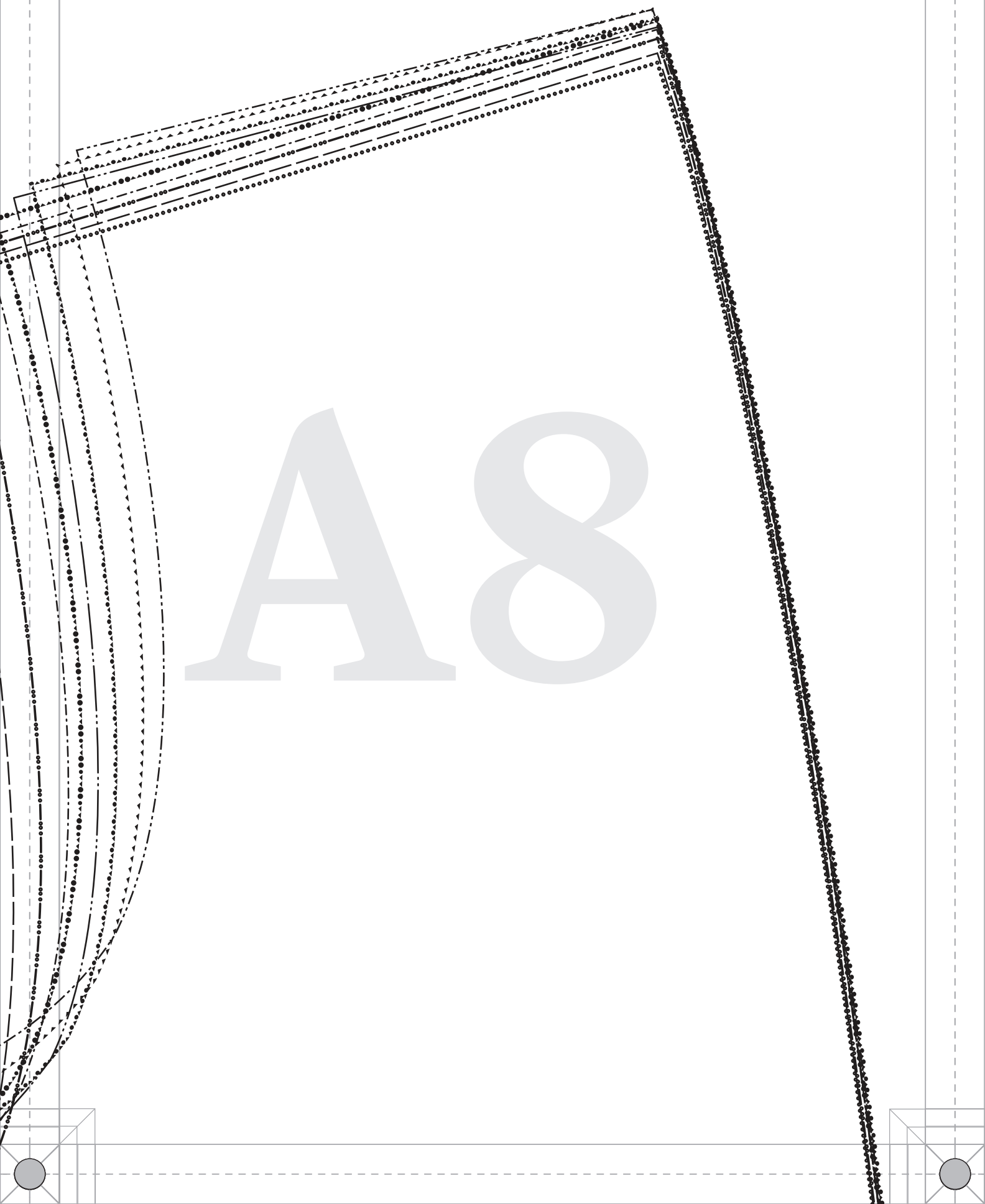
A8

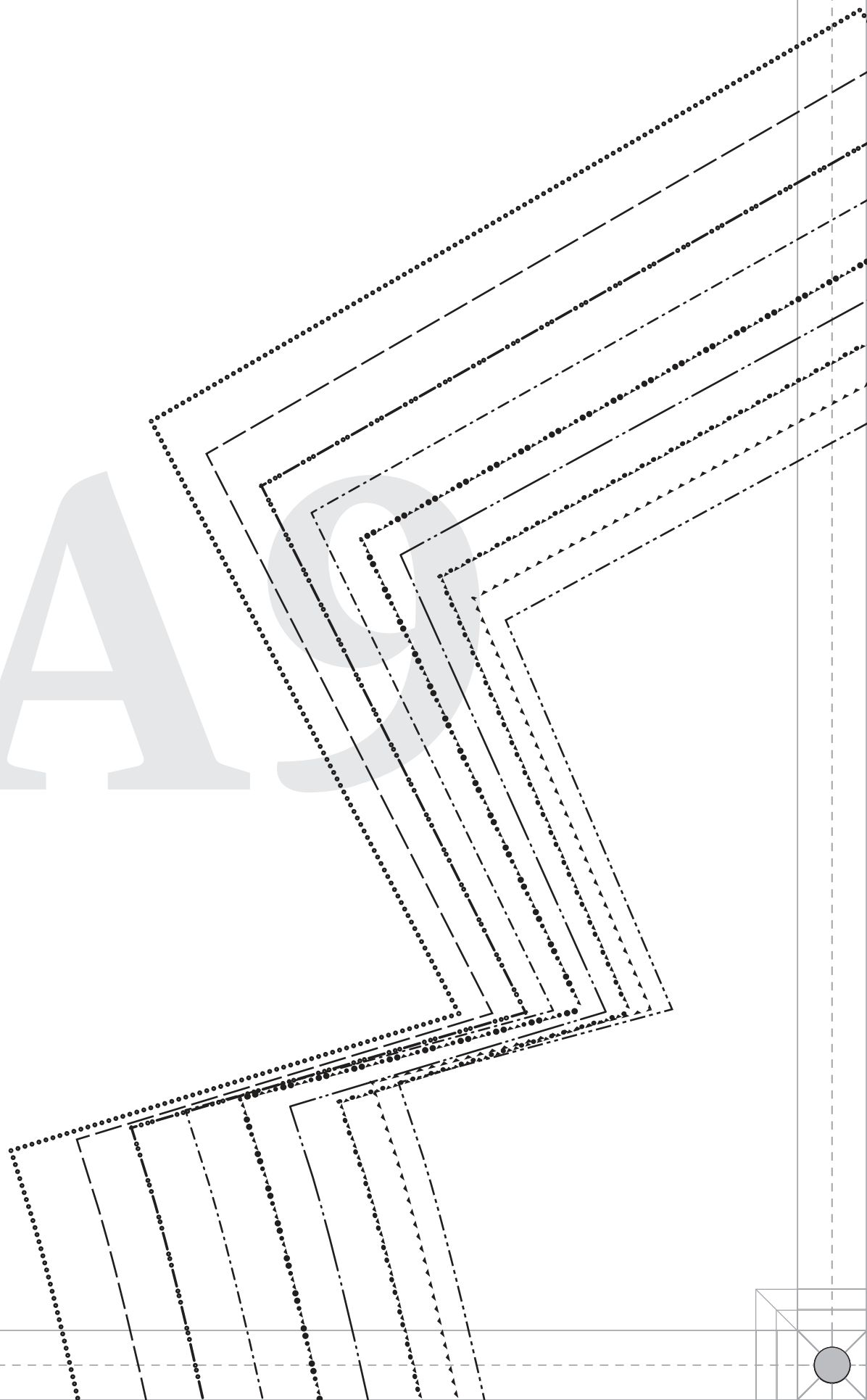

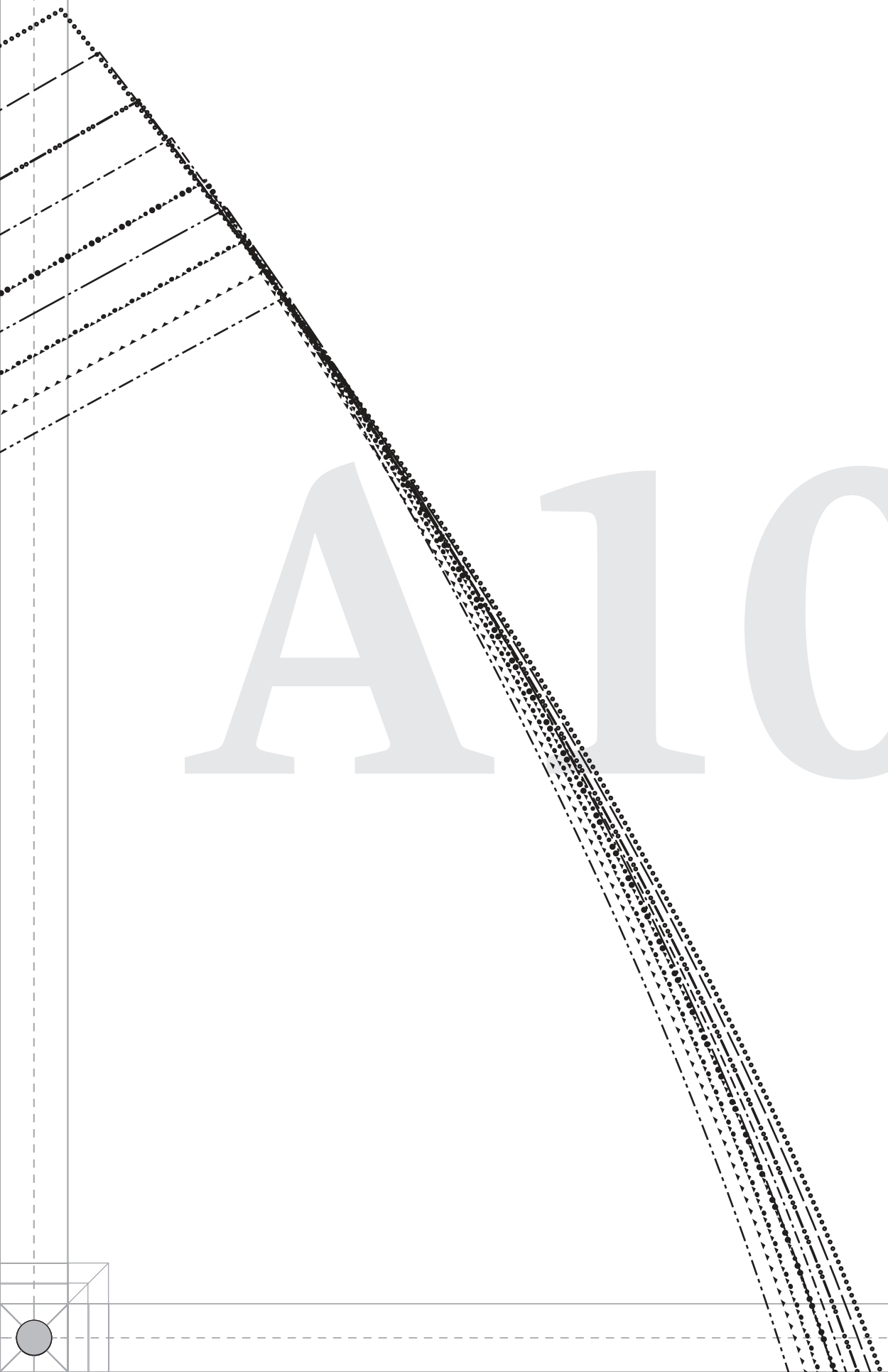
A10

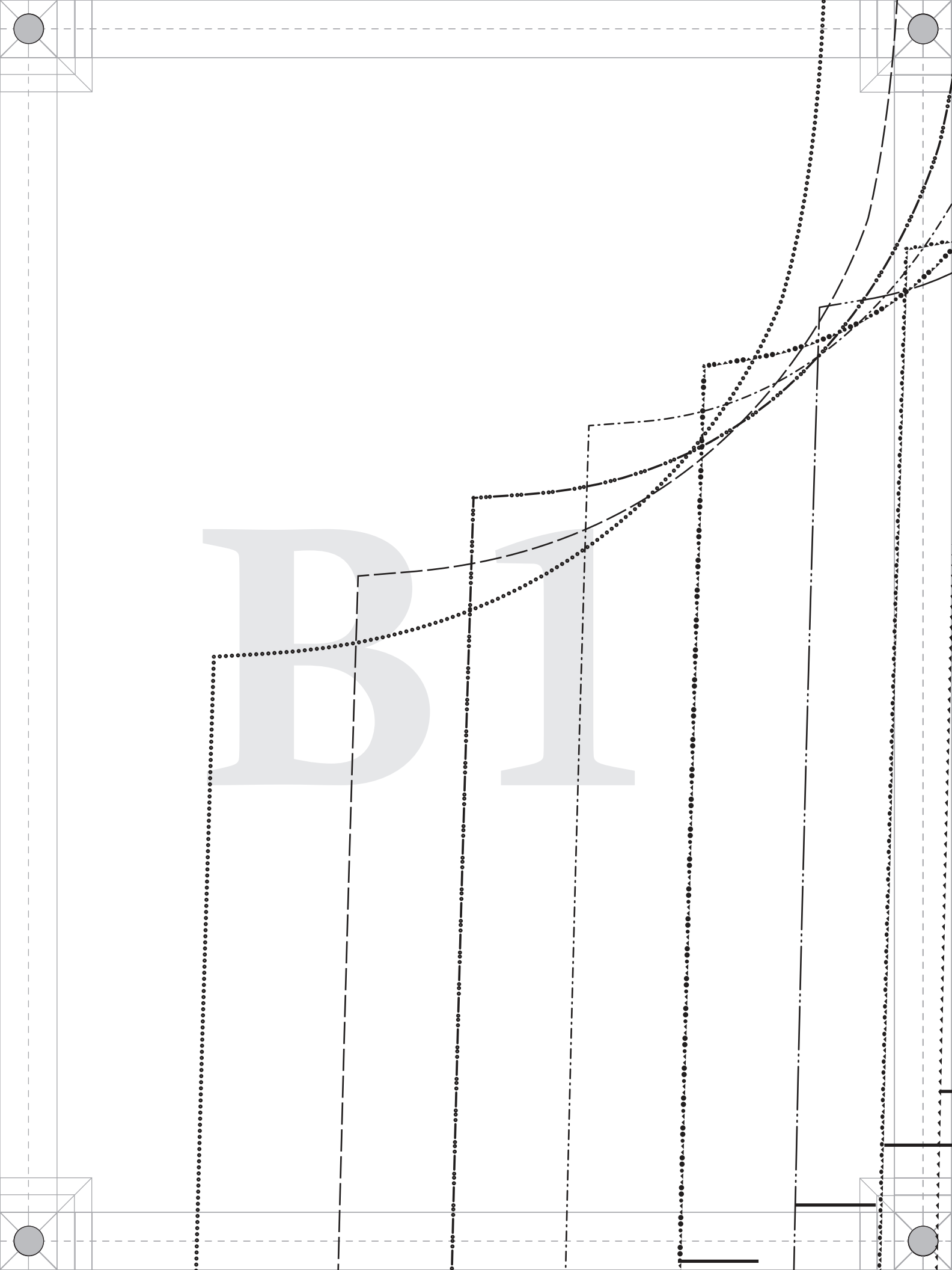
B1

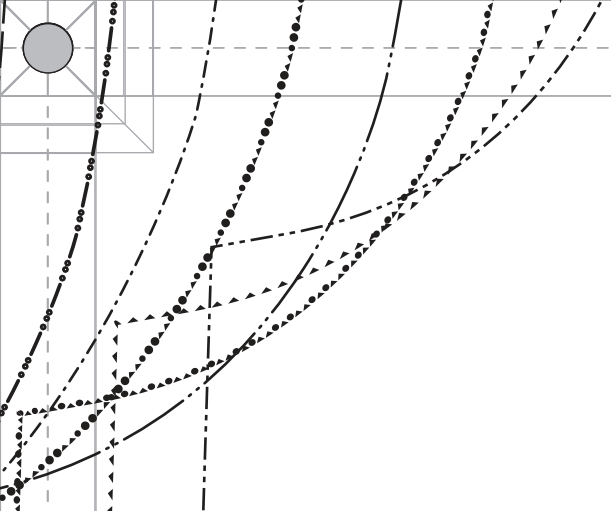

B2

Pocket Placement (Top)

B3

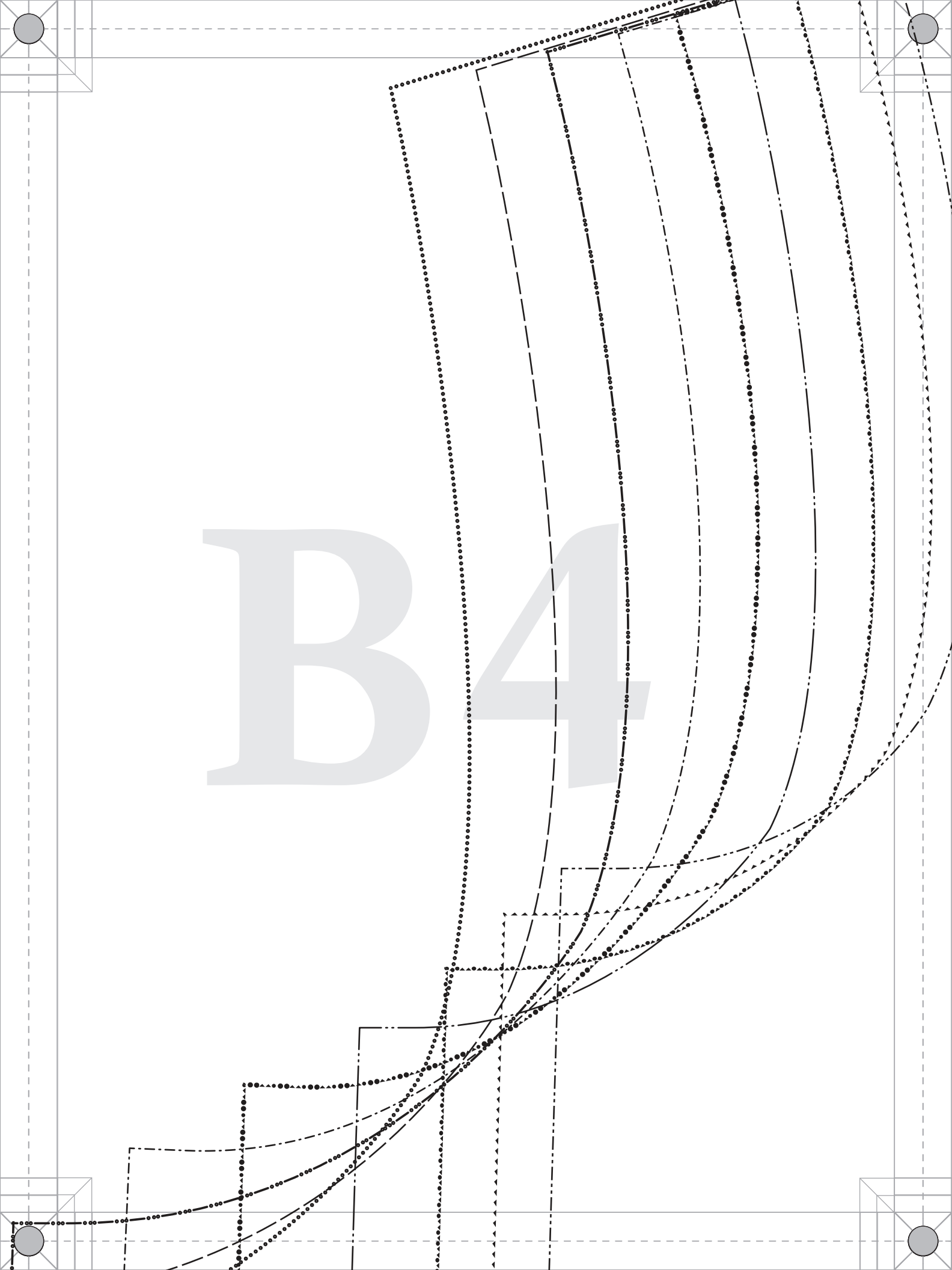
B4

PATTERNS BY mood FABRICS MDF483

#MoodGlacialPattern

"The Glacial Duster Coat"
MDF483
B - FRONT
FABRIC: Cut 2 mirrored

Ladies Sizes XS to 5XL

1/2" seam allowances (SA's) included

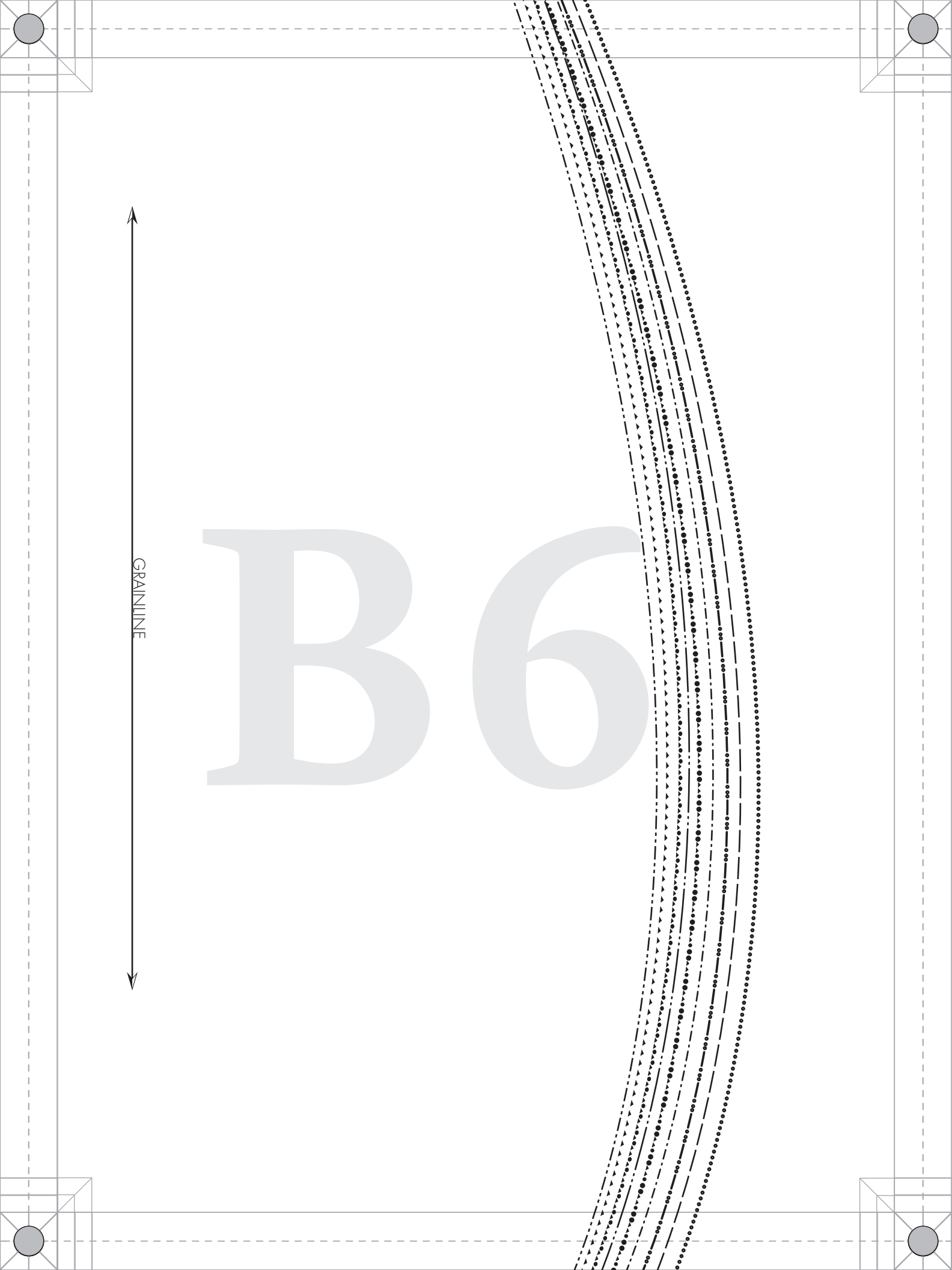
GRAINLINE
B6

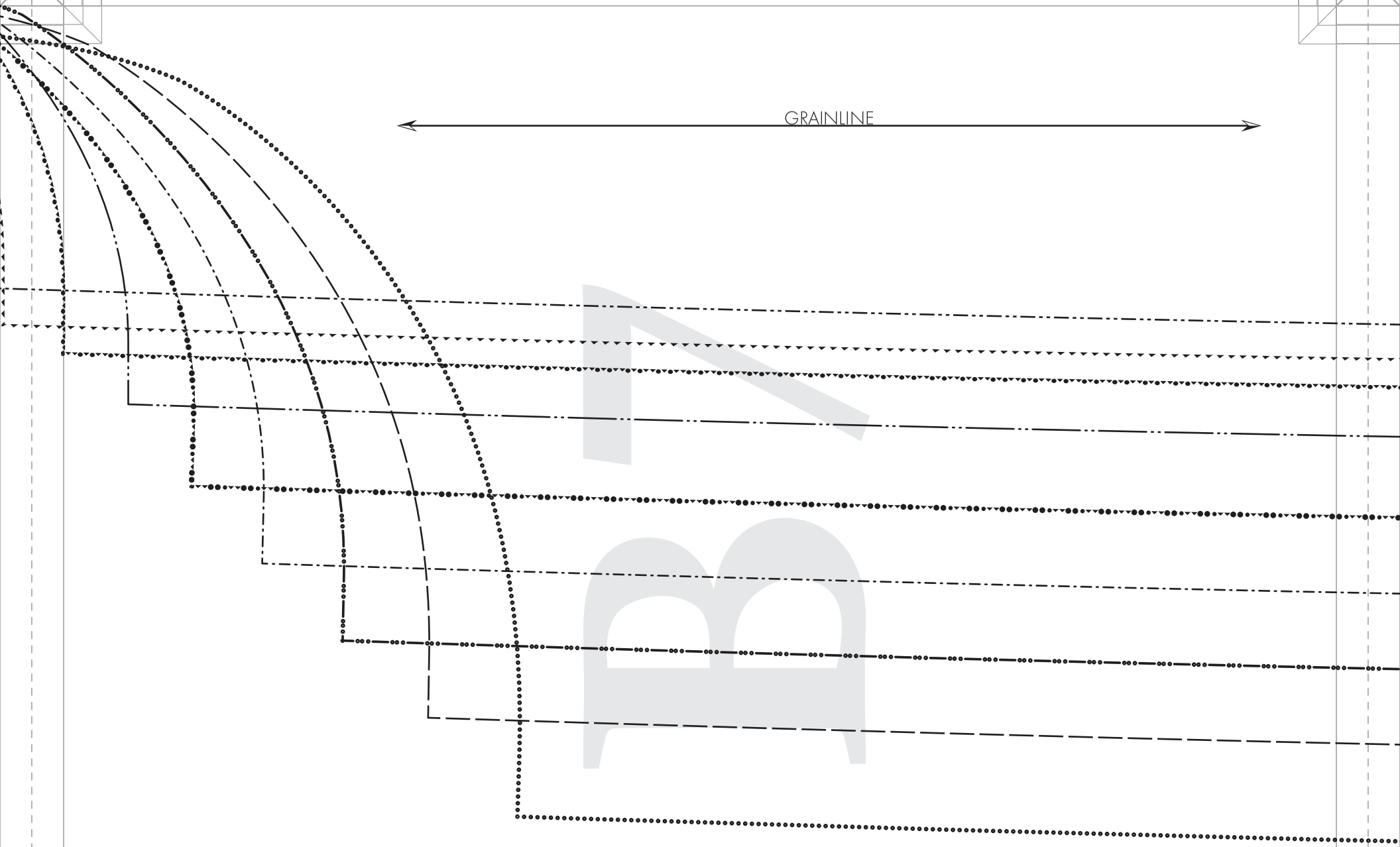
GRAINLINE

PATTERNS BY mood FABRICS MDF483

#MoodGlacialPattern

"The Glacial Duster Coat" MDF483

C - FRONT LINING

LINING: Cut 2 mirrored

Ladies Sizes XS to 5XL

1/2" seam allowances (SA's) included

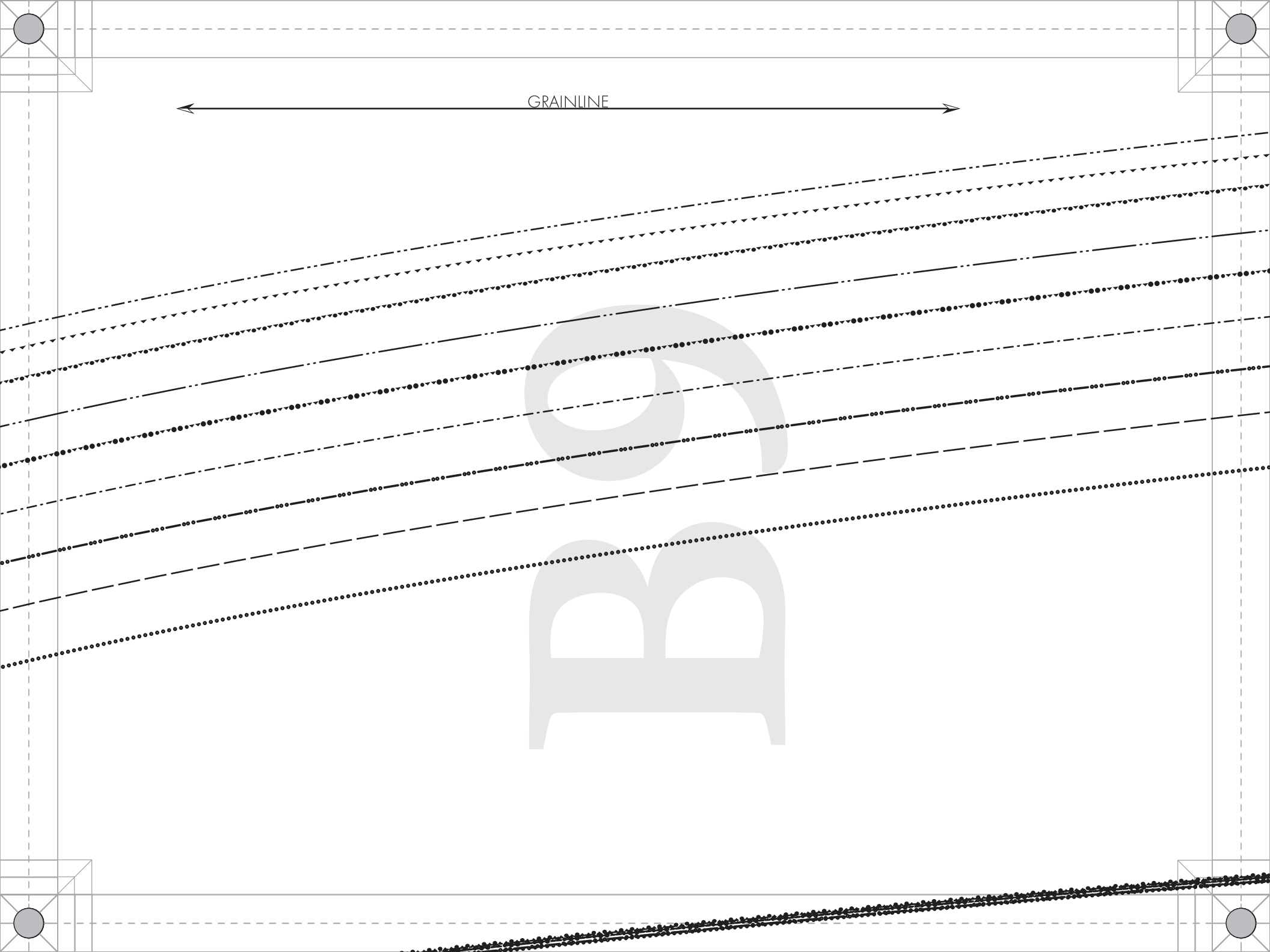
GRAINLINE

PATTERNS BY mood FABRICS MDF483

#MoodGlacialPattern

"The Glacial Duster Coat"
MDF483
D - FRONT FACING
FABRIC: Cut 2 mirrored

Ladies Sizes XS to 5XL

1/2" seam allowances (SA's) included

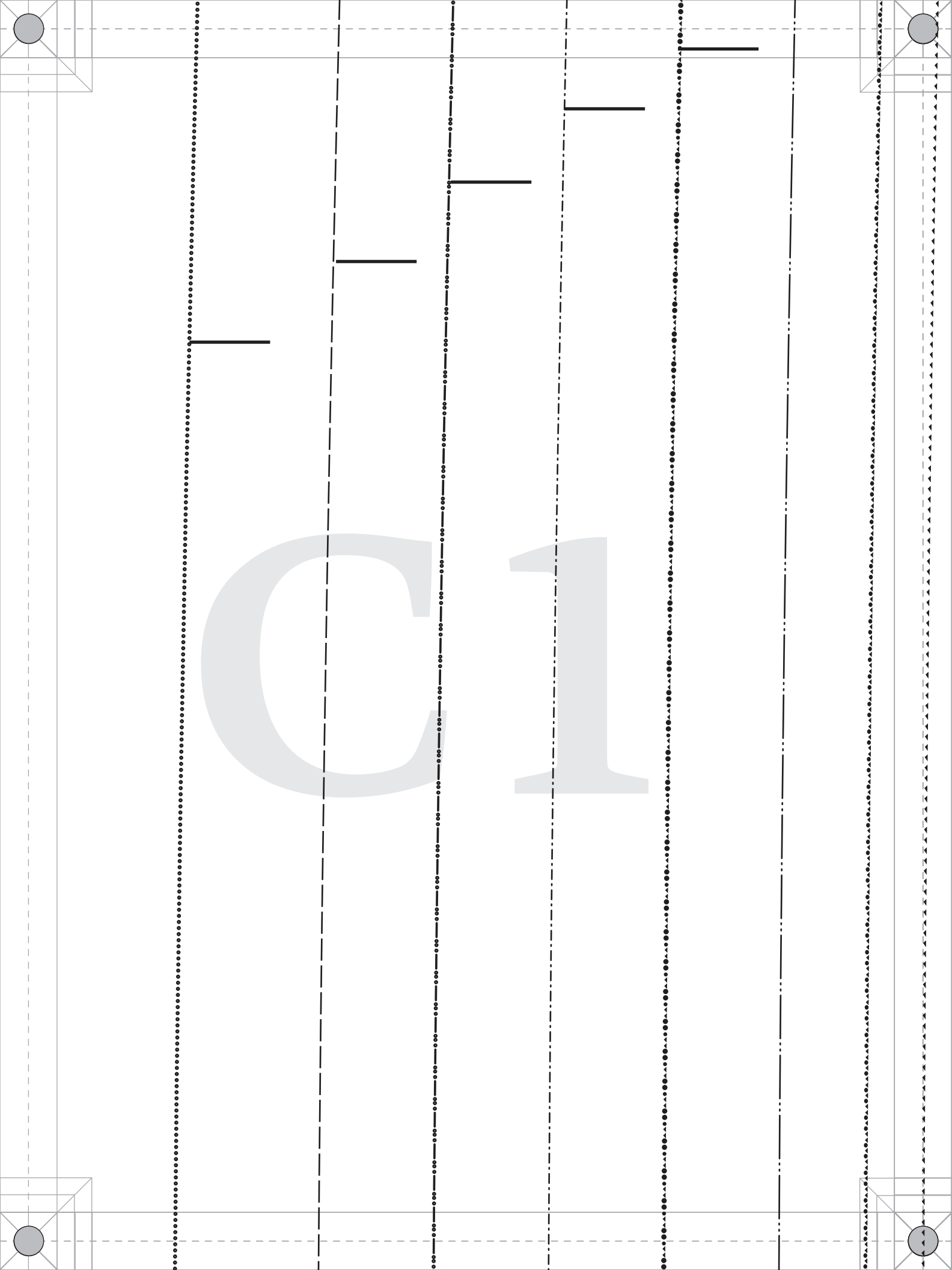
C1

C2

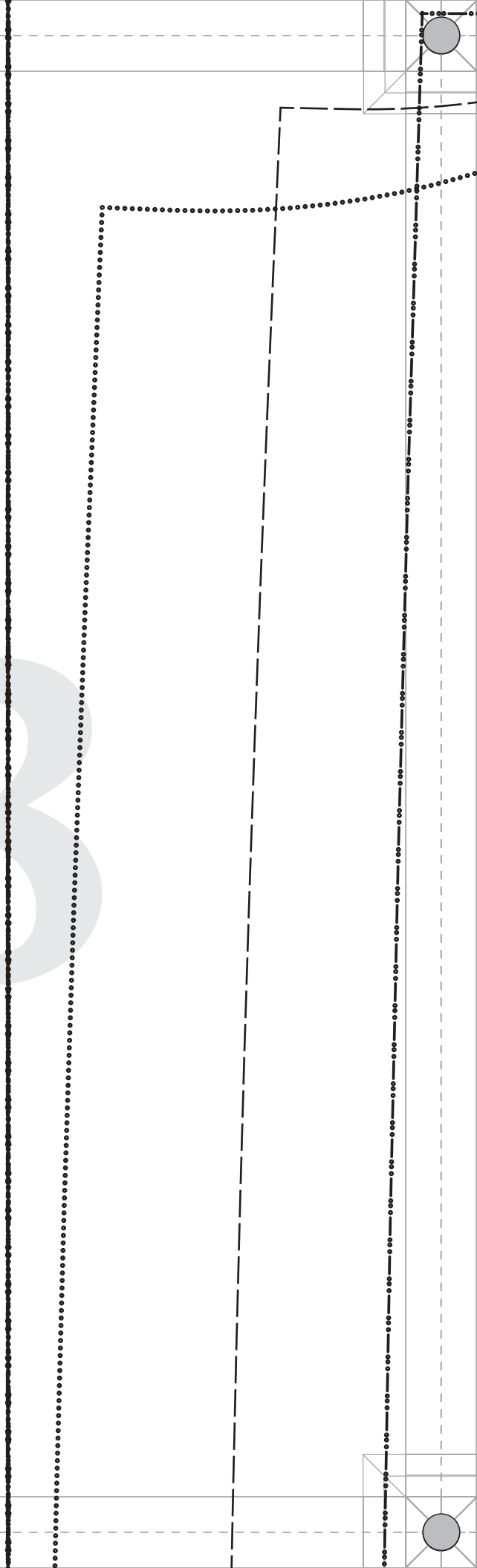

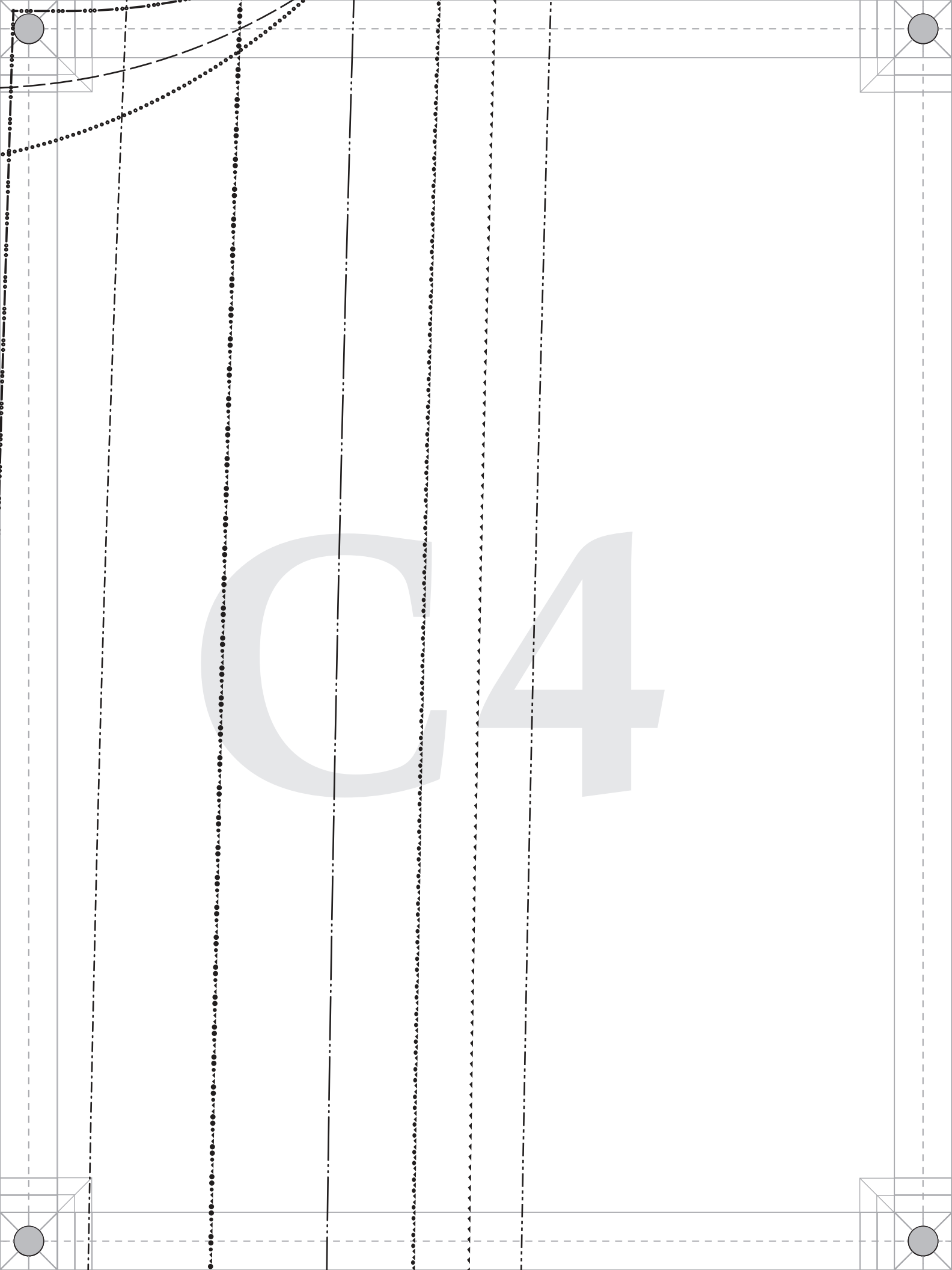
C4

C5

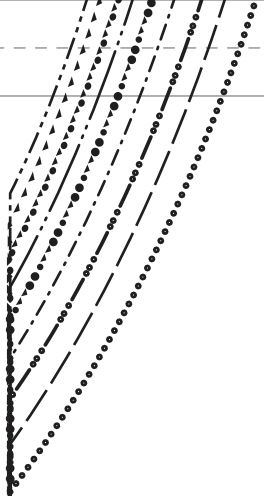

C6

C8

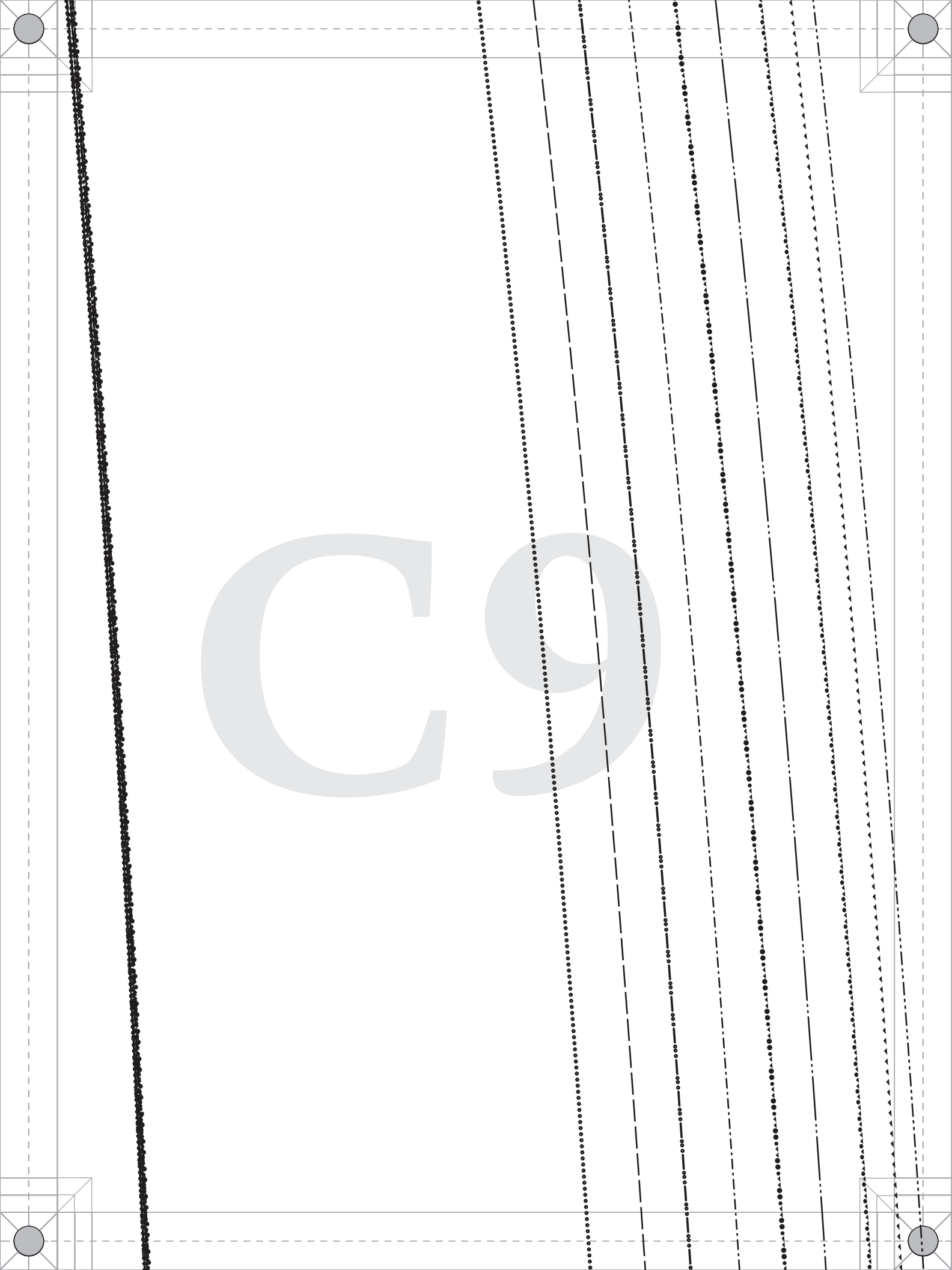
C9

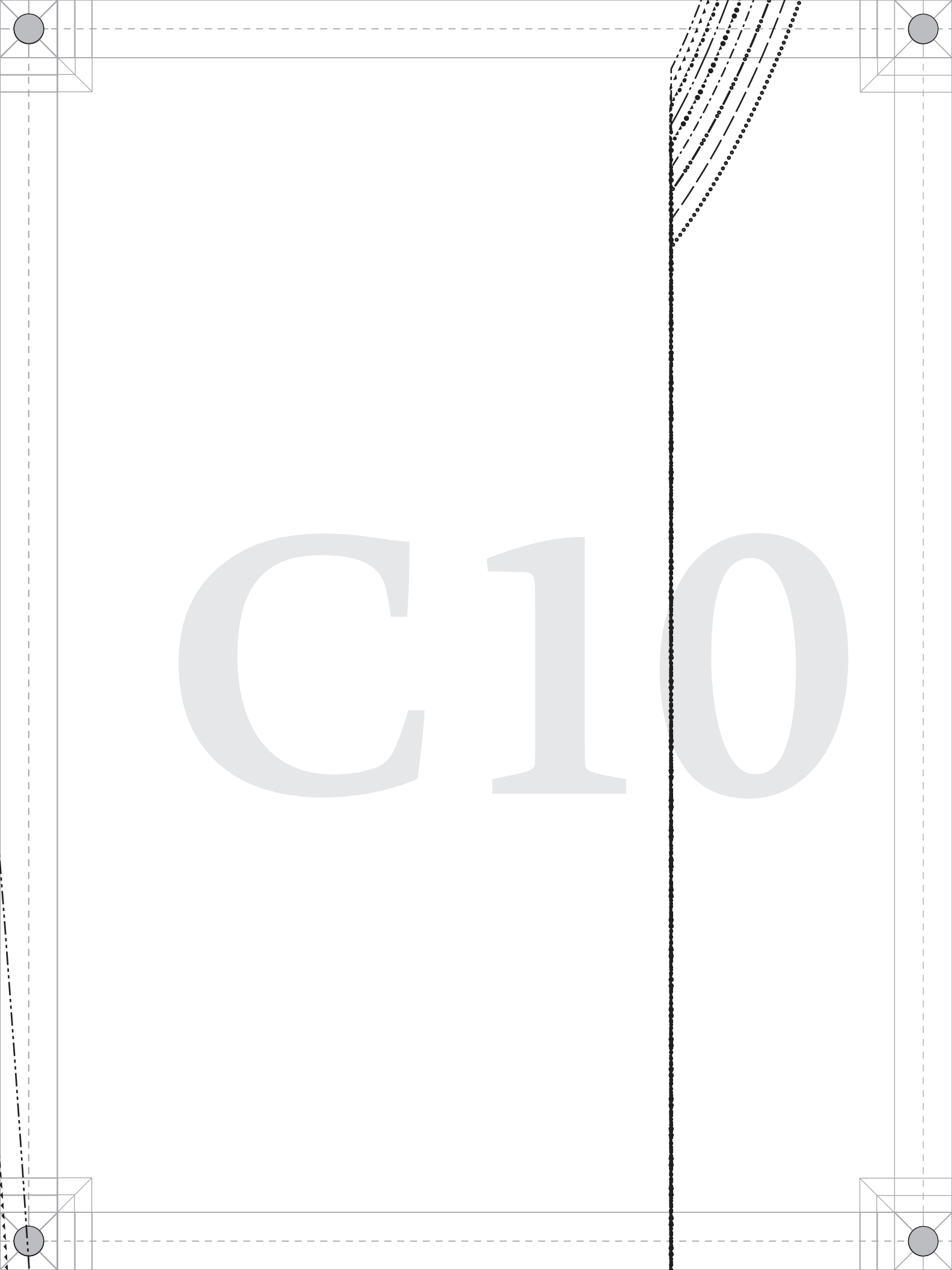
C10

D1

D2

D3

D4

D5

D6

D7

D8

D9

D10

E1

E2

E3

E4

E5

E6

E8

E9

E10

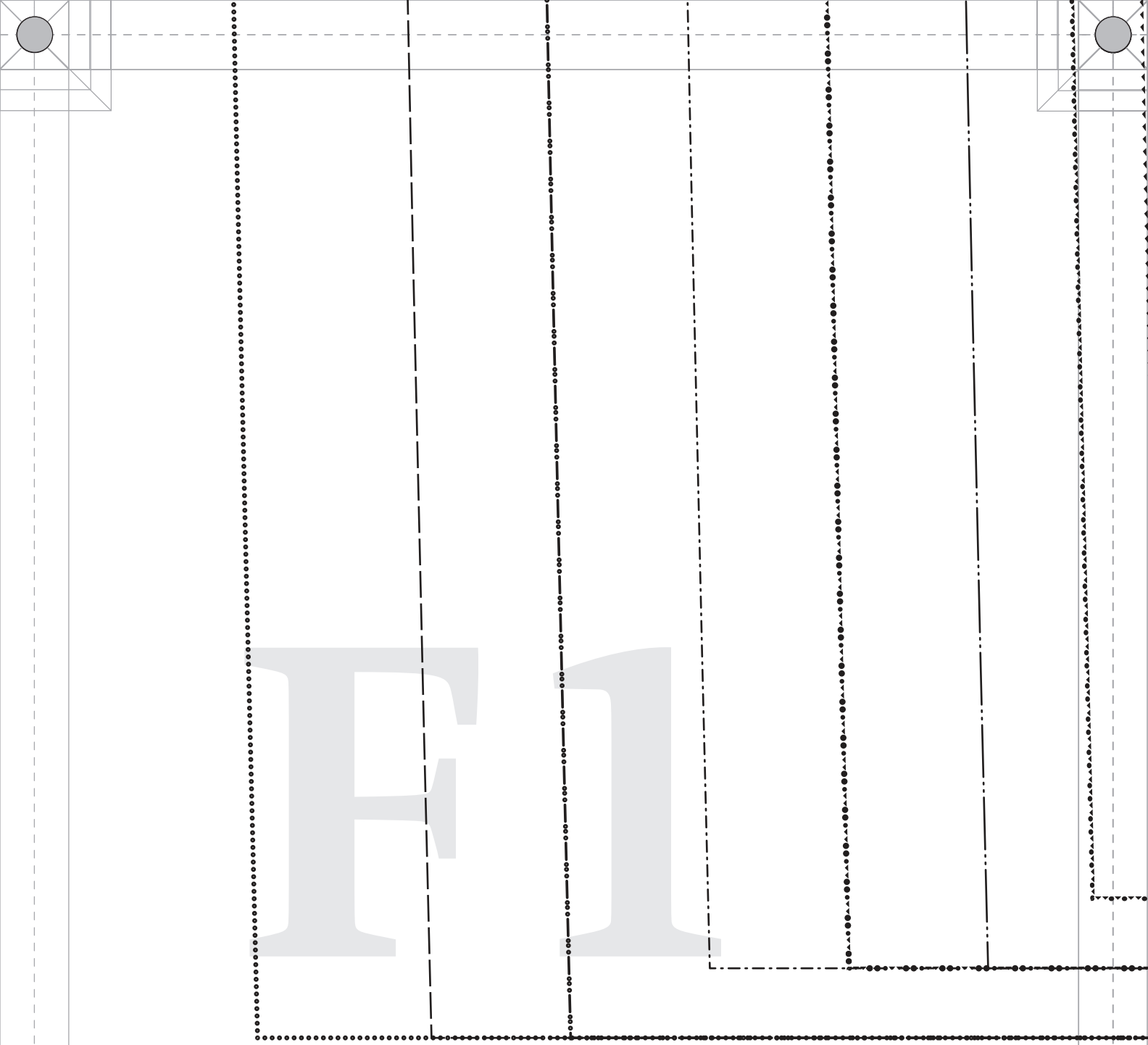
F1

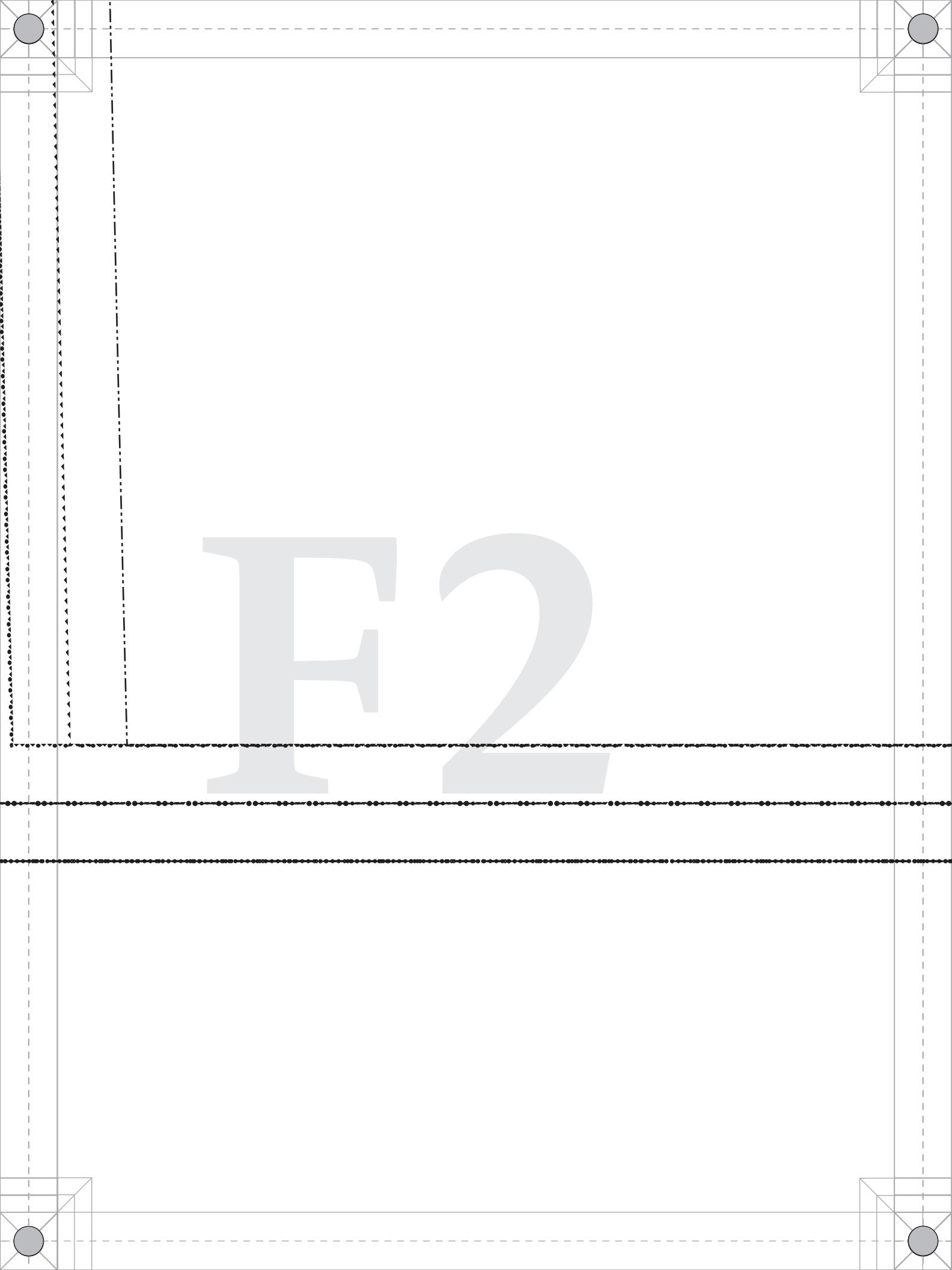
E2

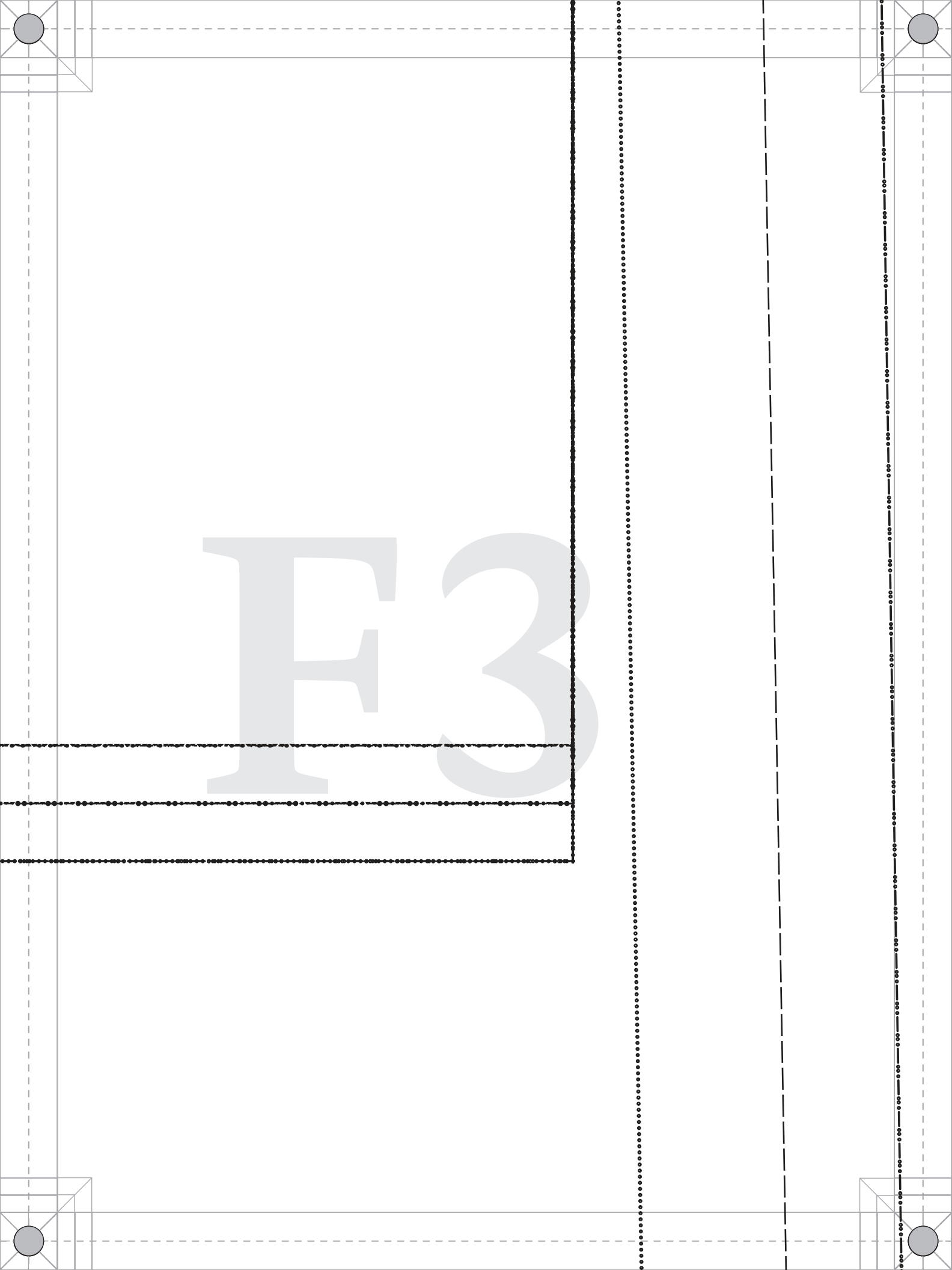

F3

E4

F5

F6

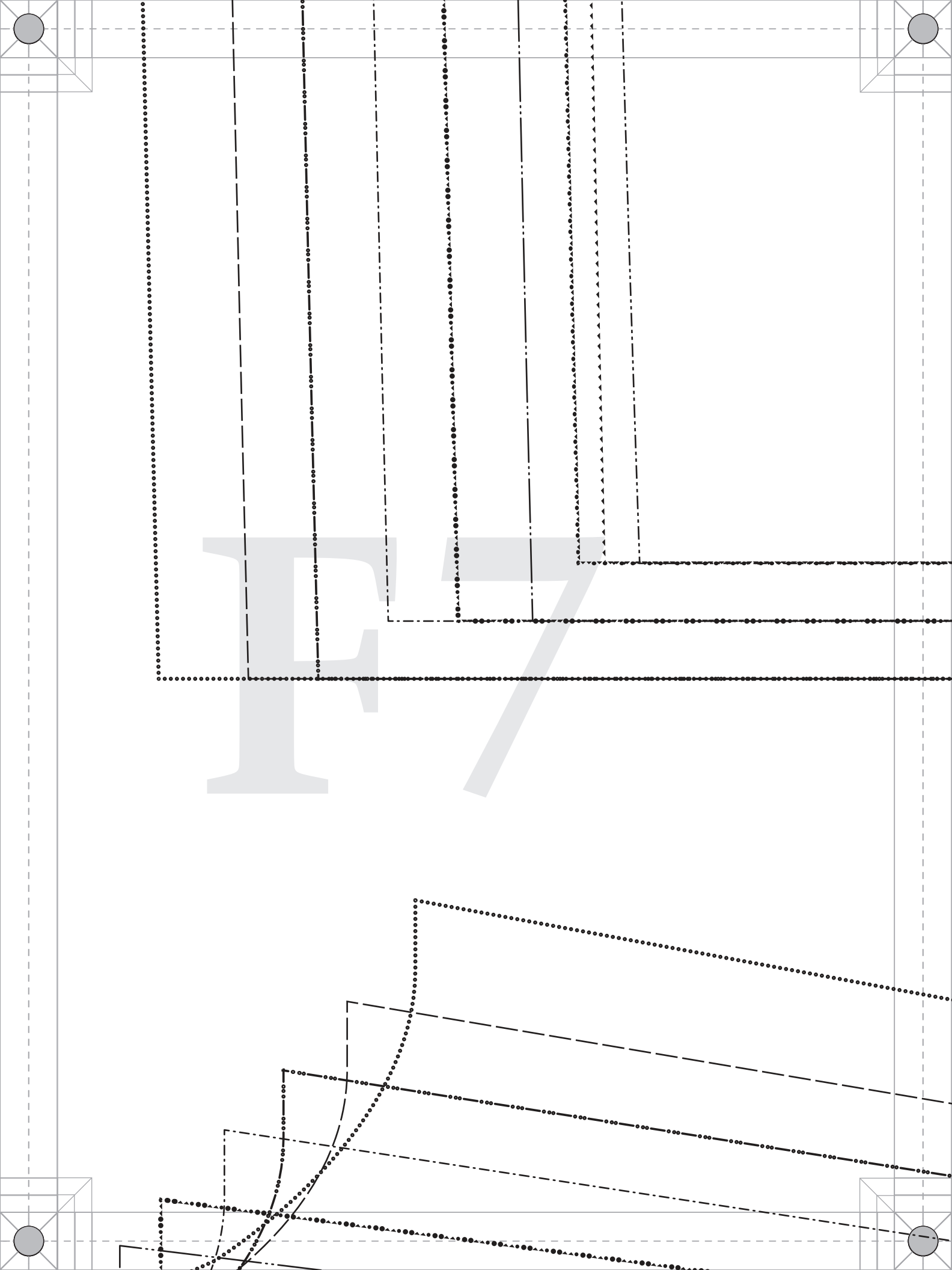

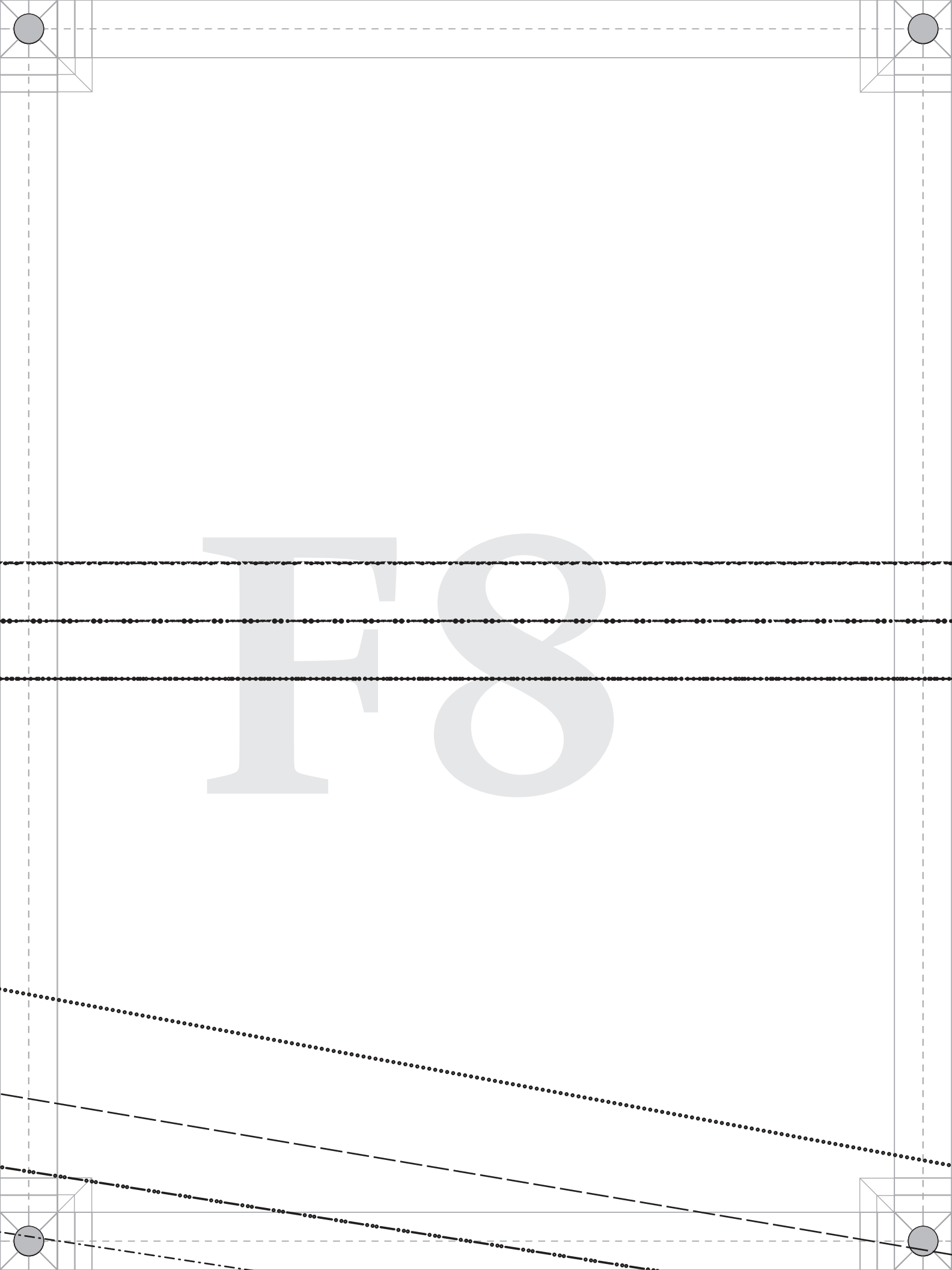
F8

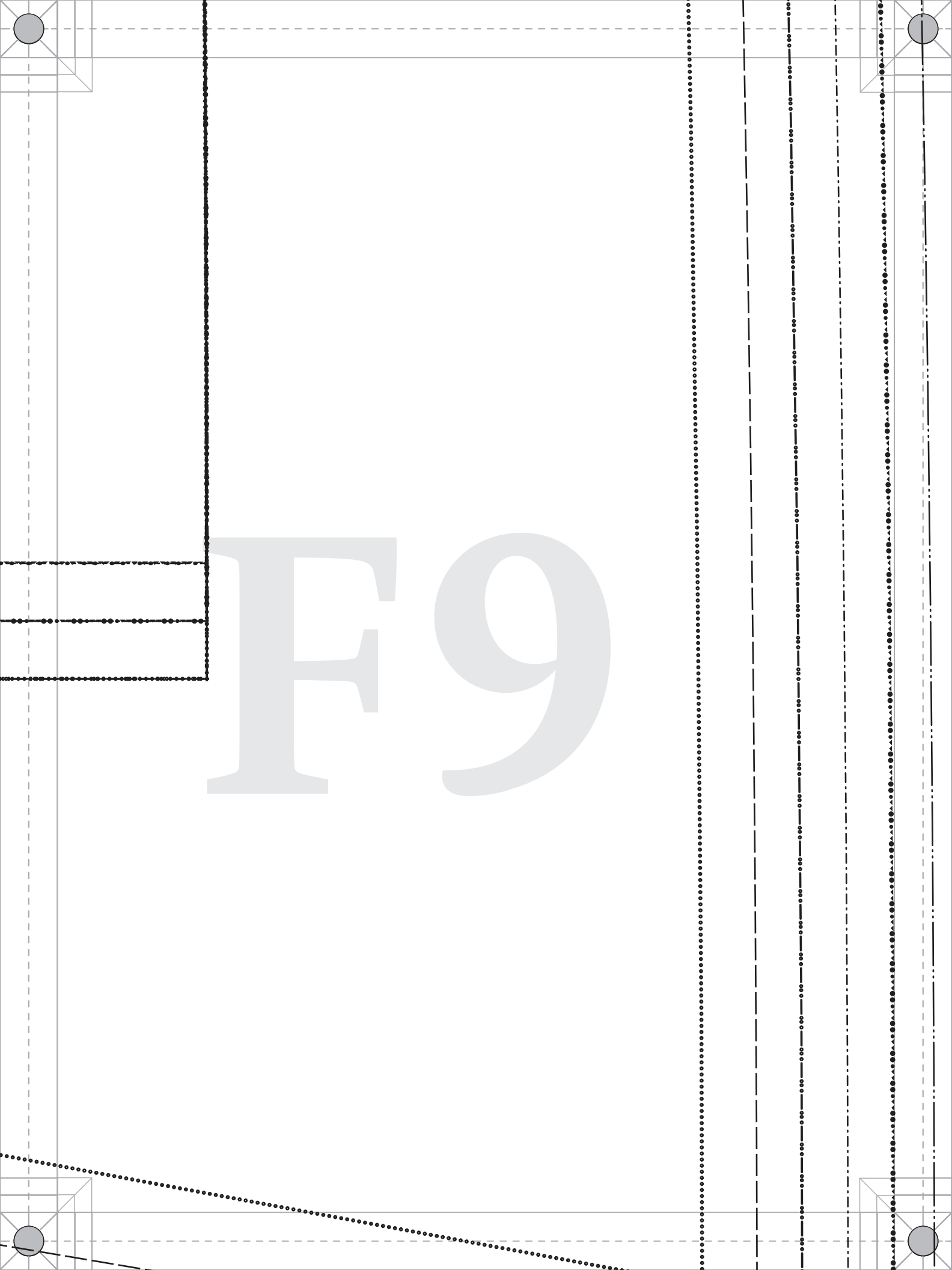
F9

F10

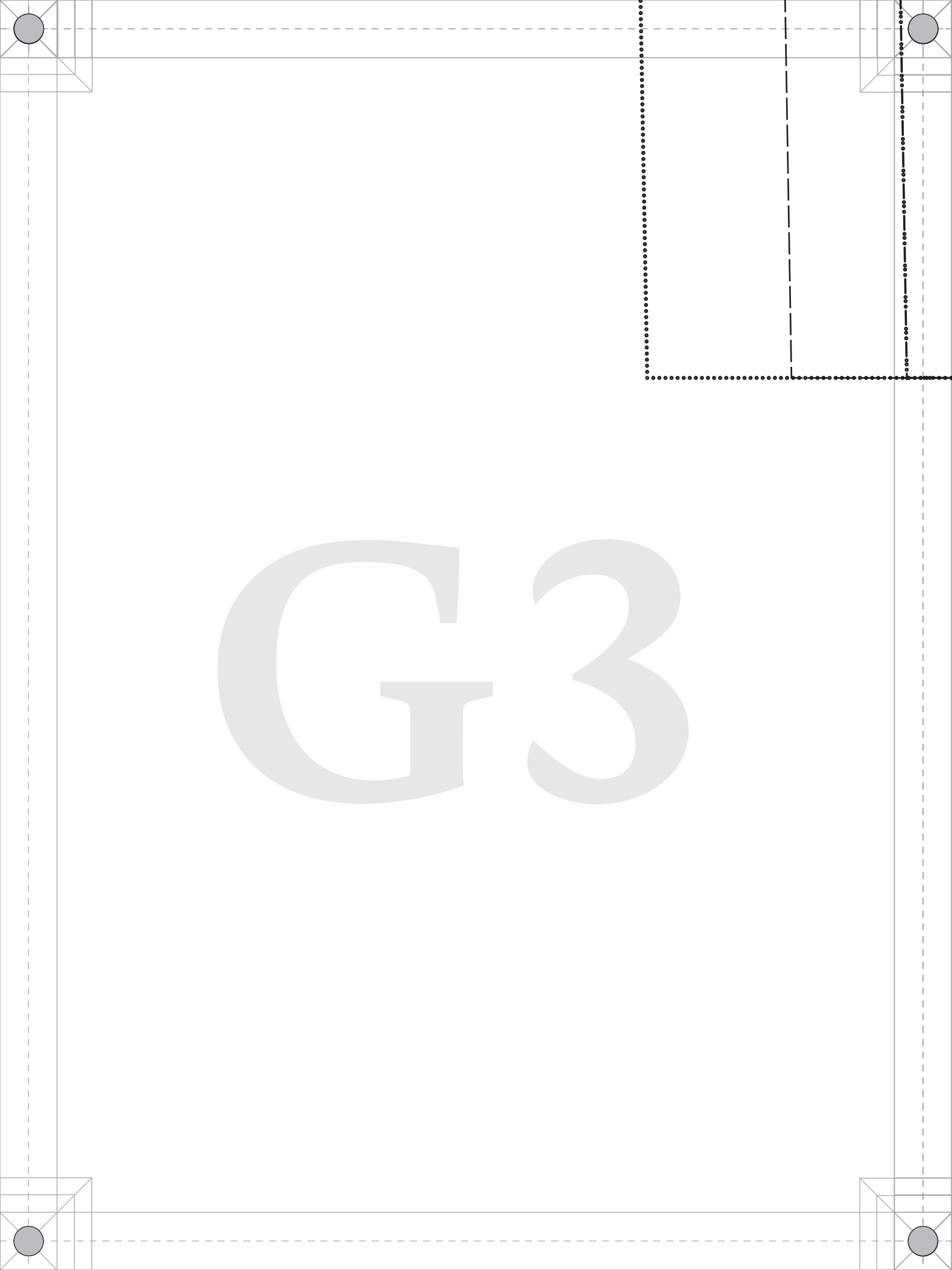
G3

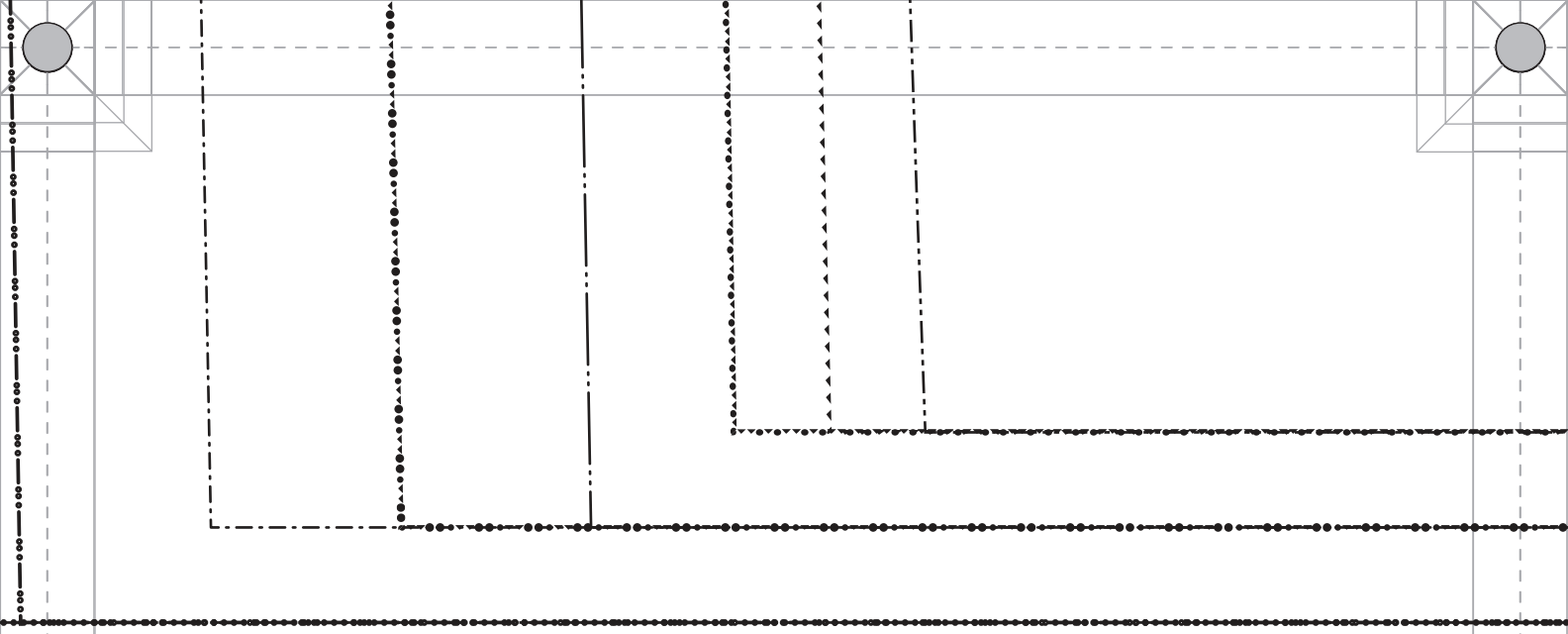

G4

G5

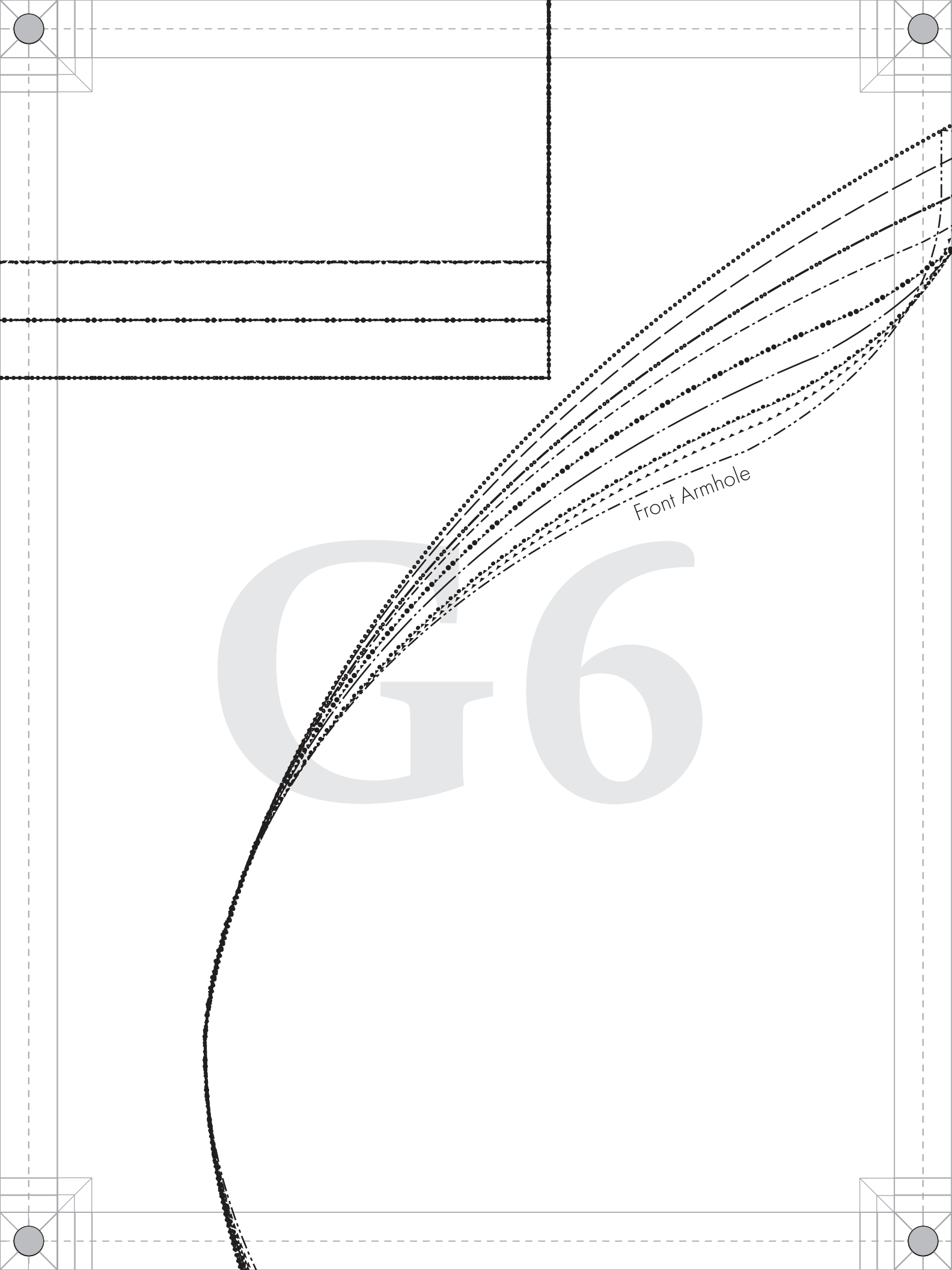
Front Armhole
G6

PATTERNS BY mood FABRICS MDF483

#MoodGlacialPattern

"The Glacial Duster Coat"
MDF483
E - SLEEVES
FABRIC: Cut 2 mirrored
LINING: Cut 2 mirrored

Ladies Sizes XS to 5XL

1/2" seam allowances (SA's) included

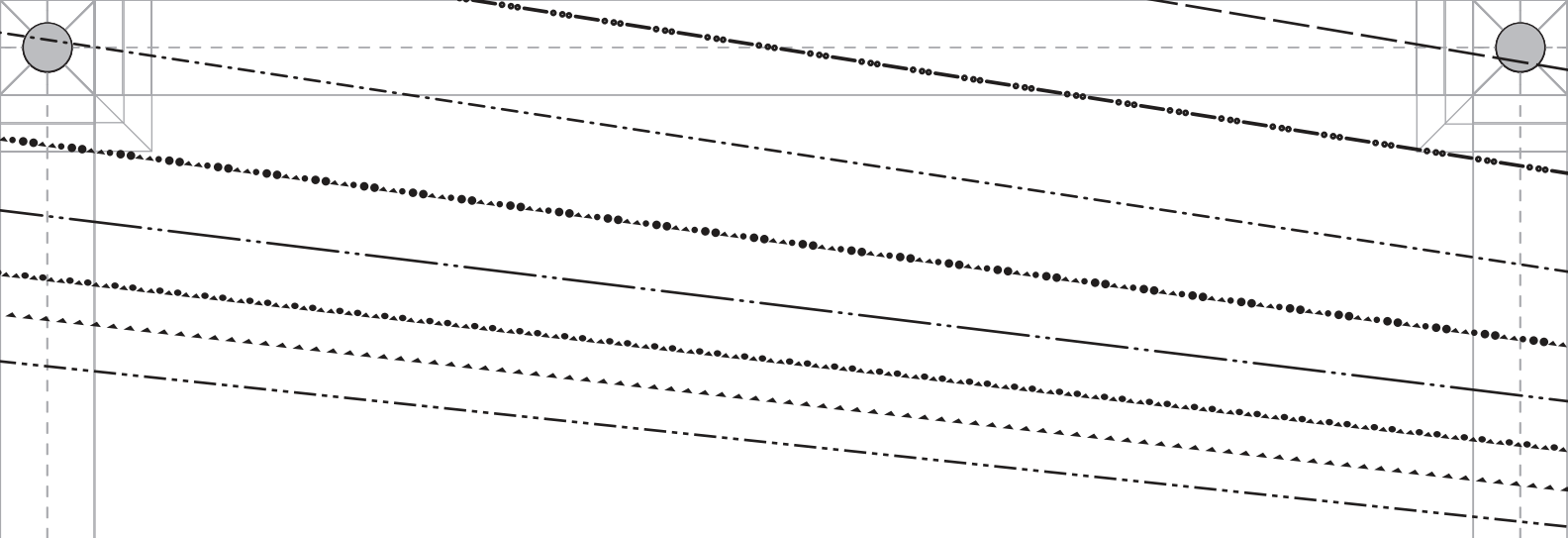

G8

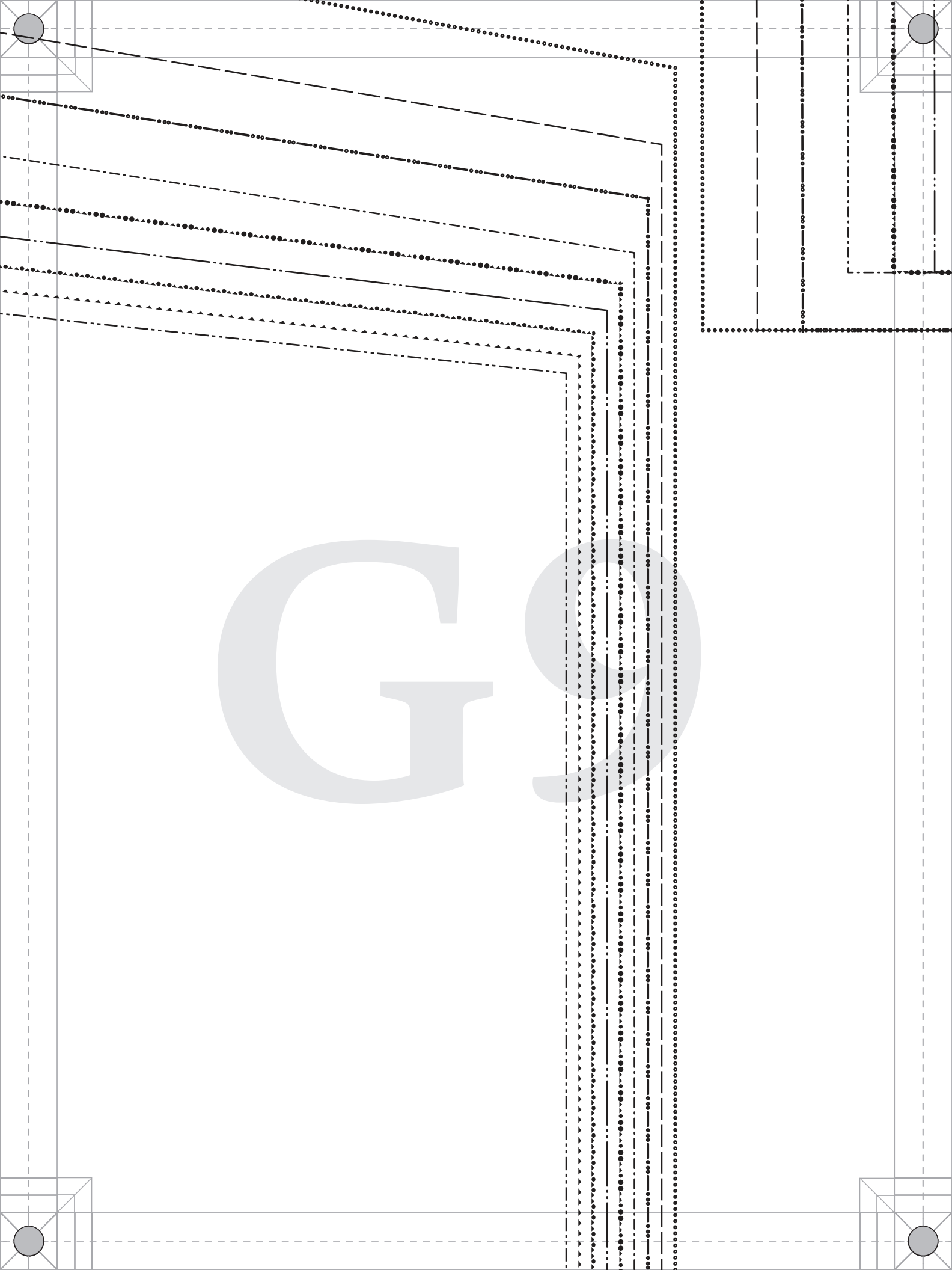

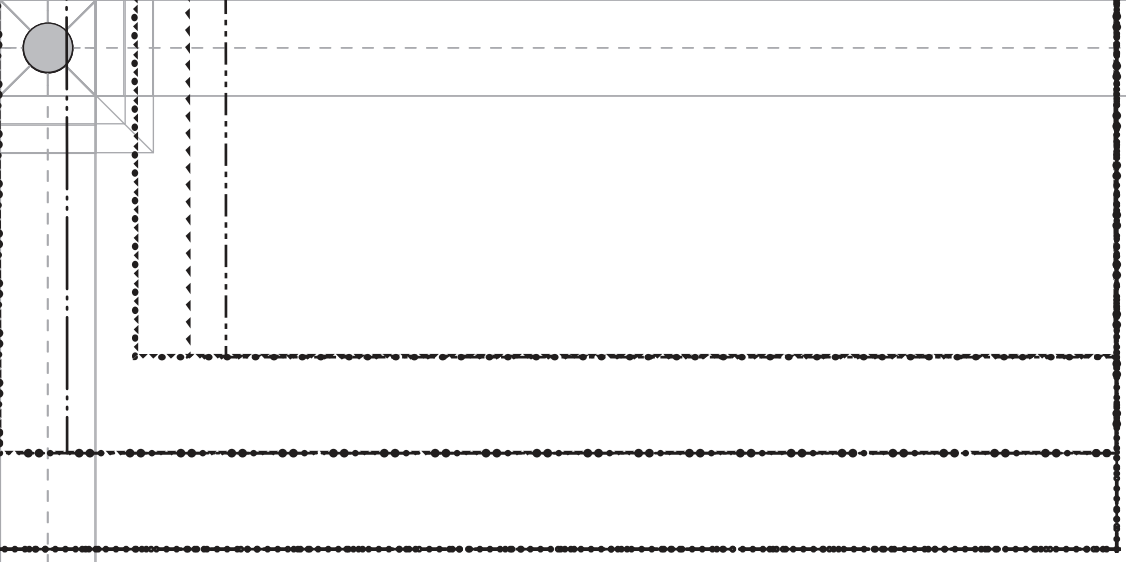

G10

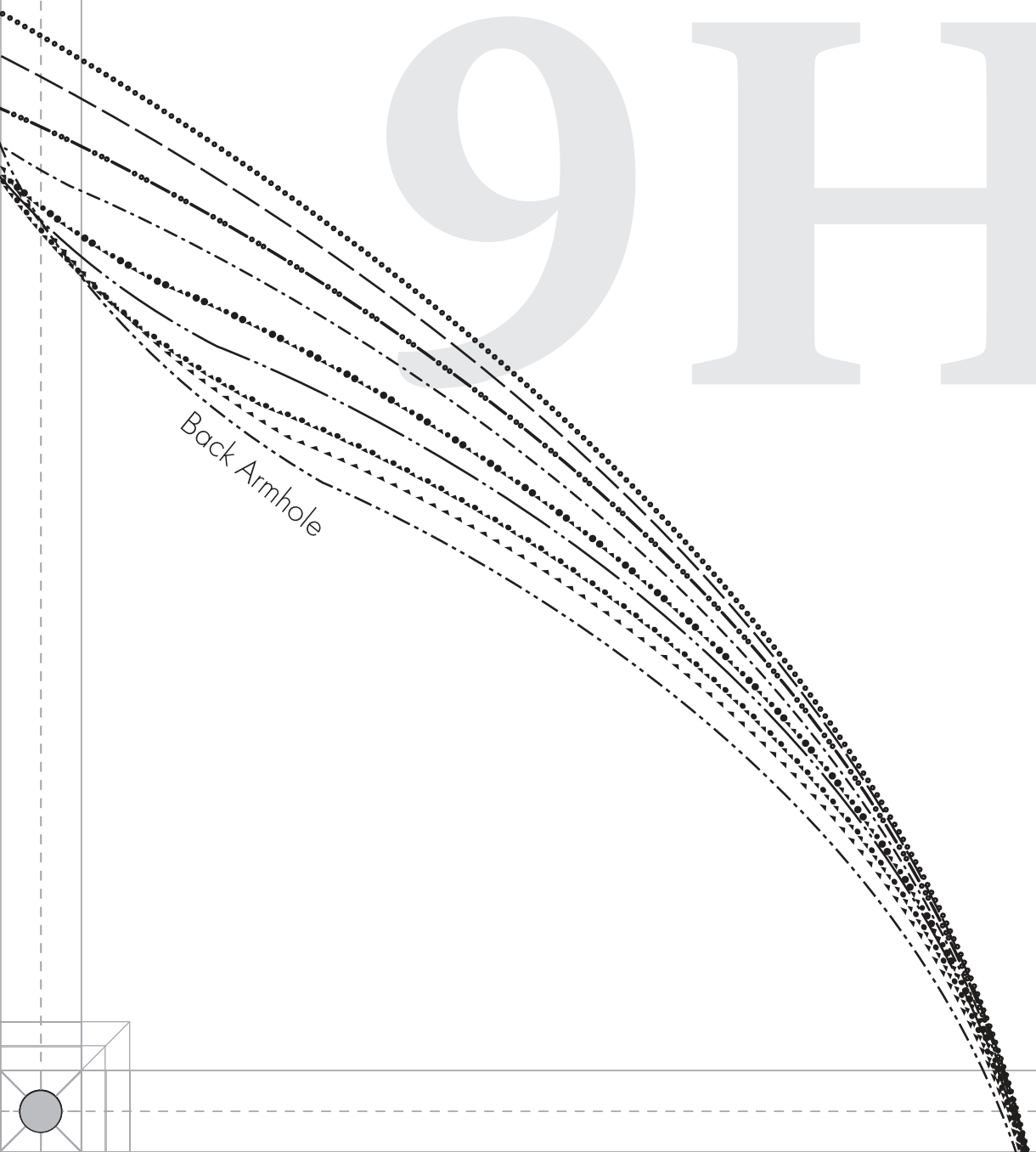
9H
Back Armhole

GRAINLINE

H7

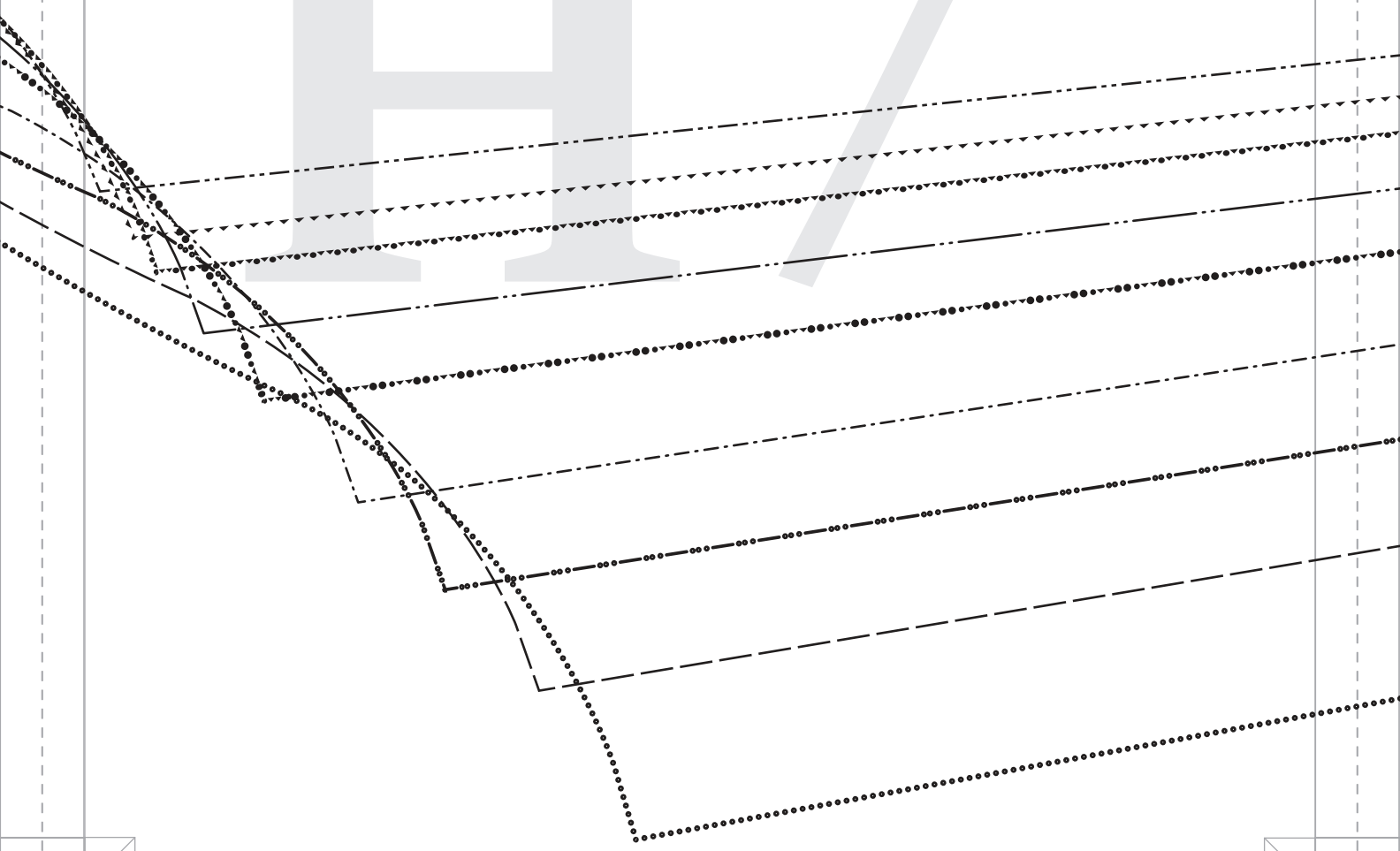

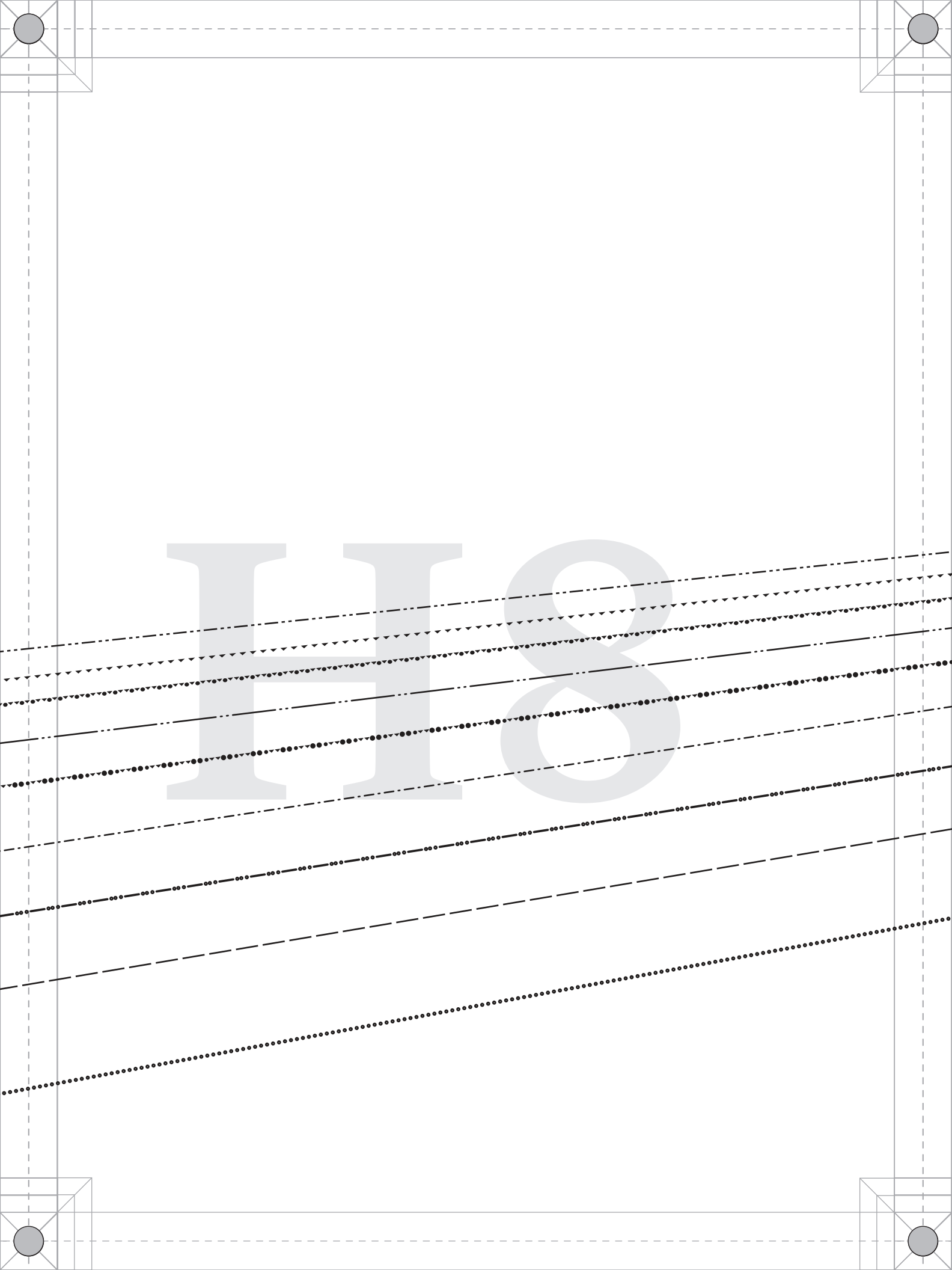

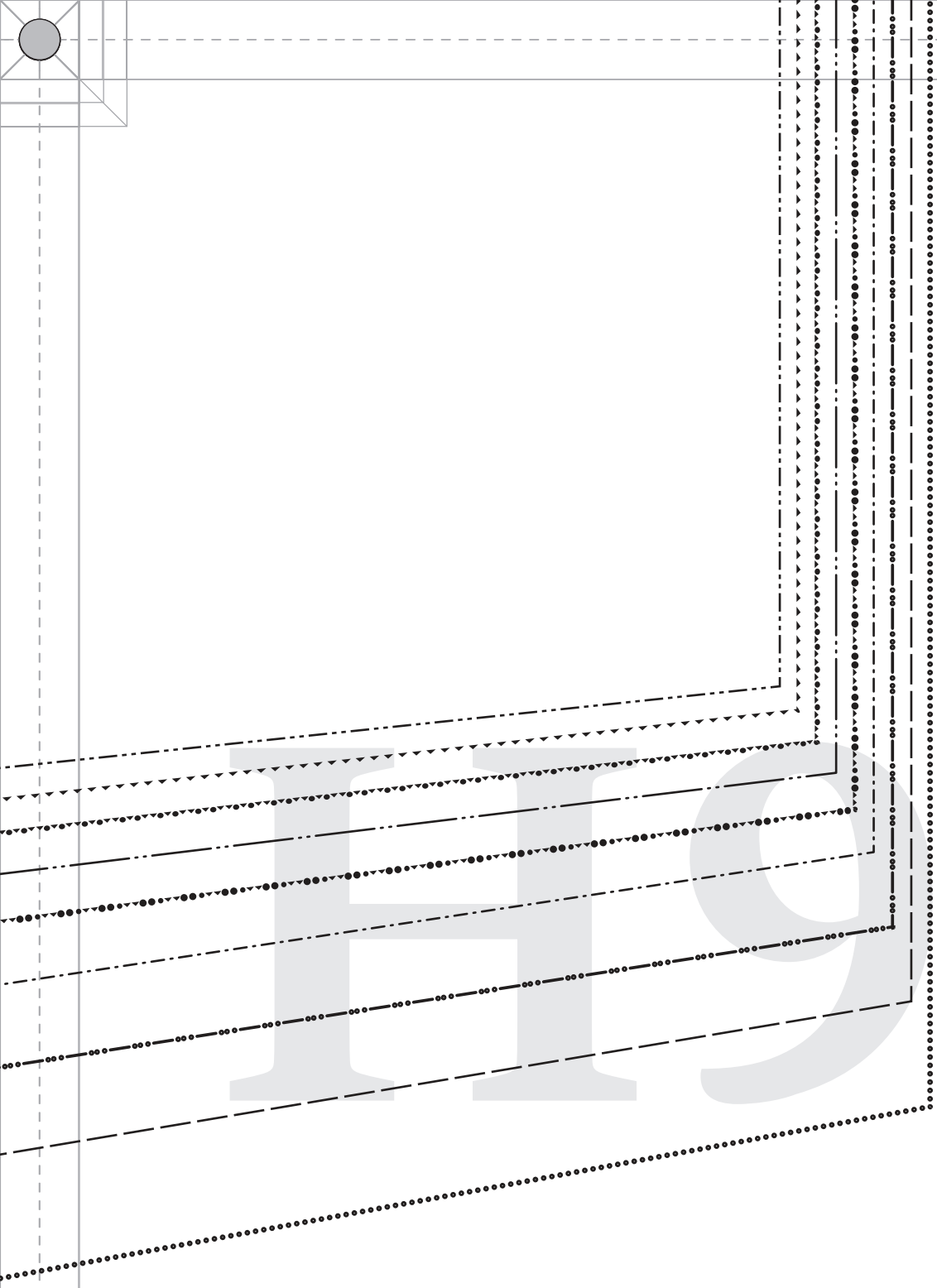



PATTERNS BY mood FABRICS MDF483

#MoodGlacialPattern

"The Glacial Duster Coat"
MDF483
F - POCKETS
LINING: Cut 2 mirrored sets

Ladies Sizes XS to 5XL

1/2" seam allowances (SA's) included