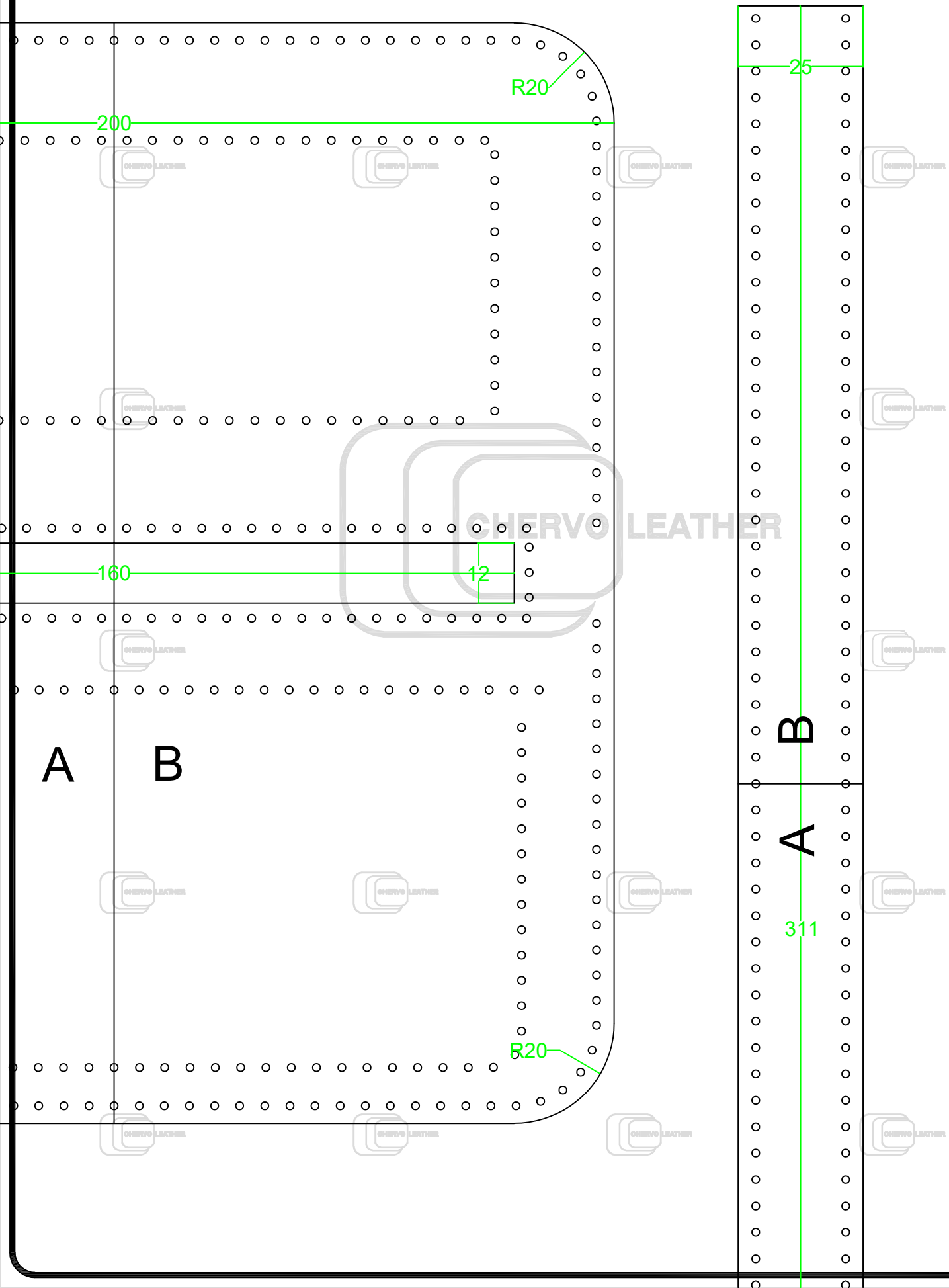
R20
200
160
12
A
B
R20
25
B
A
311

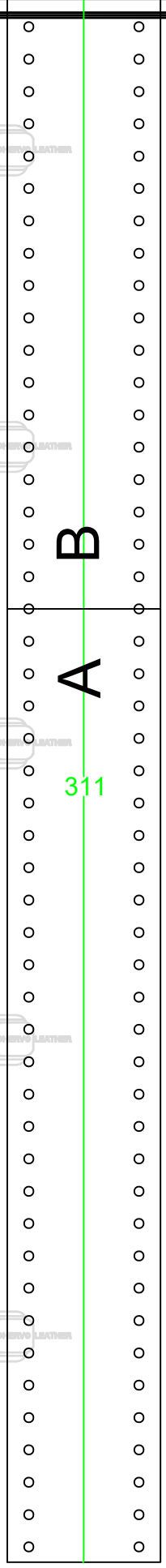

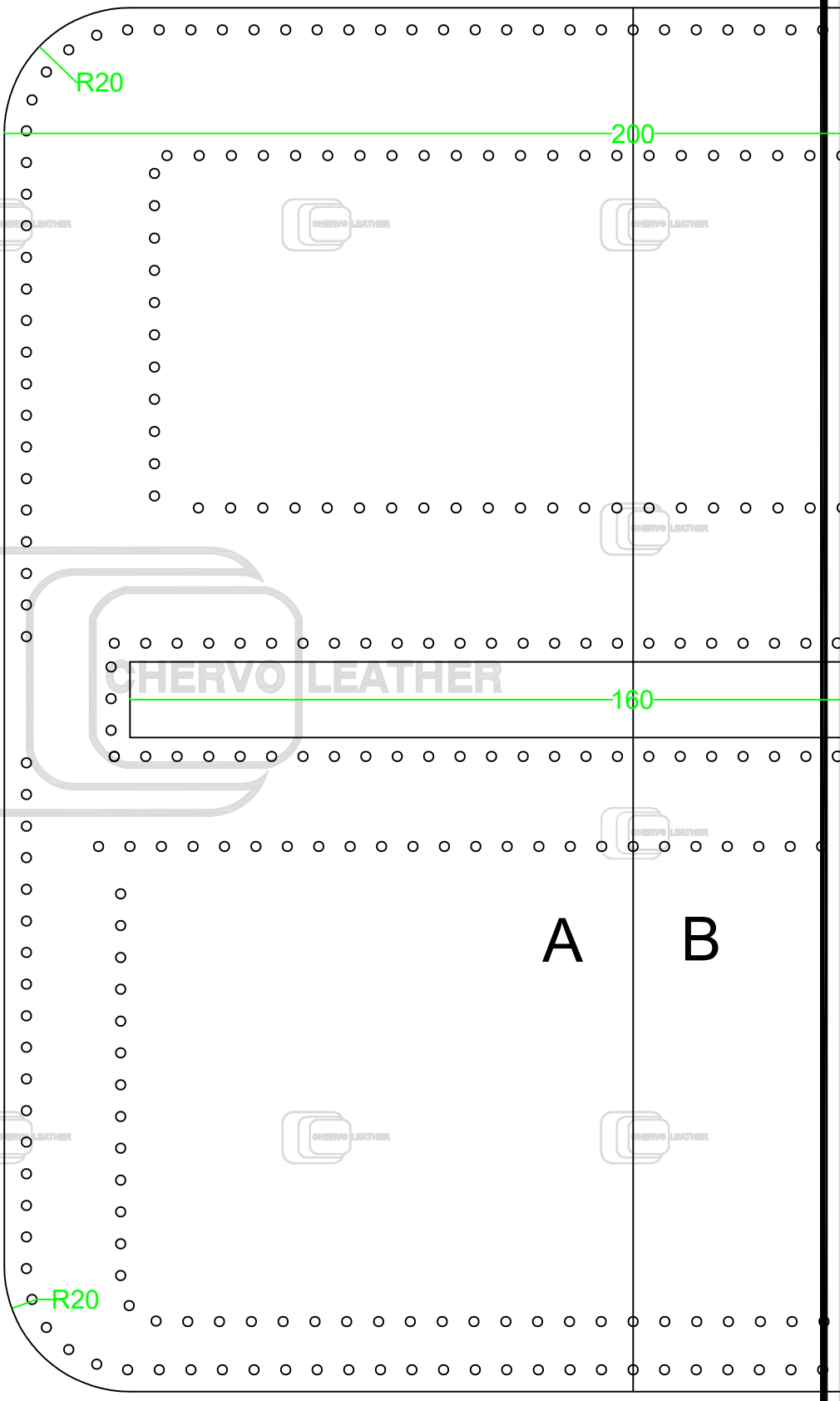

CHERVO LEATHER

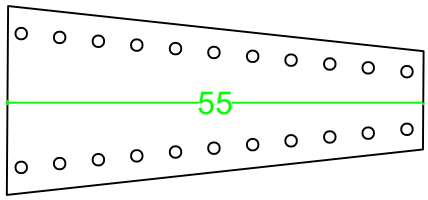

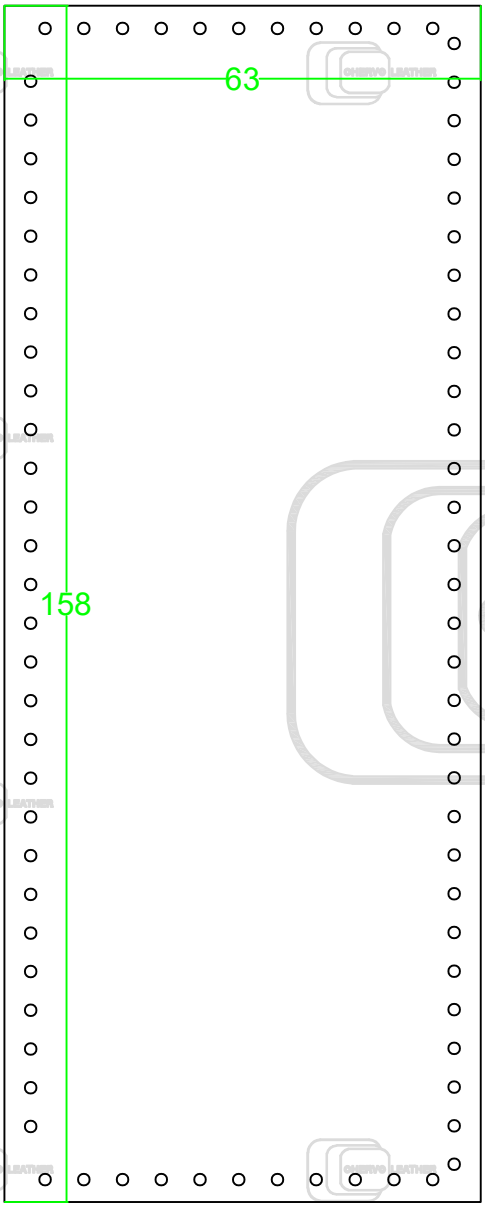

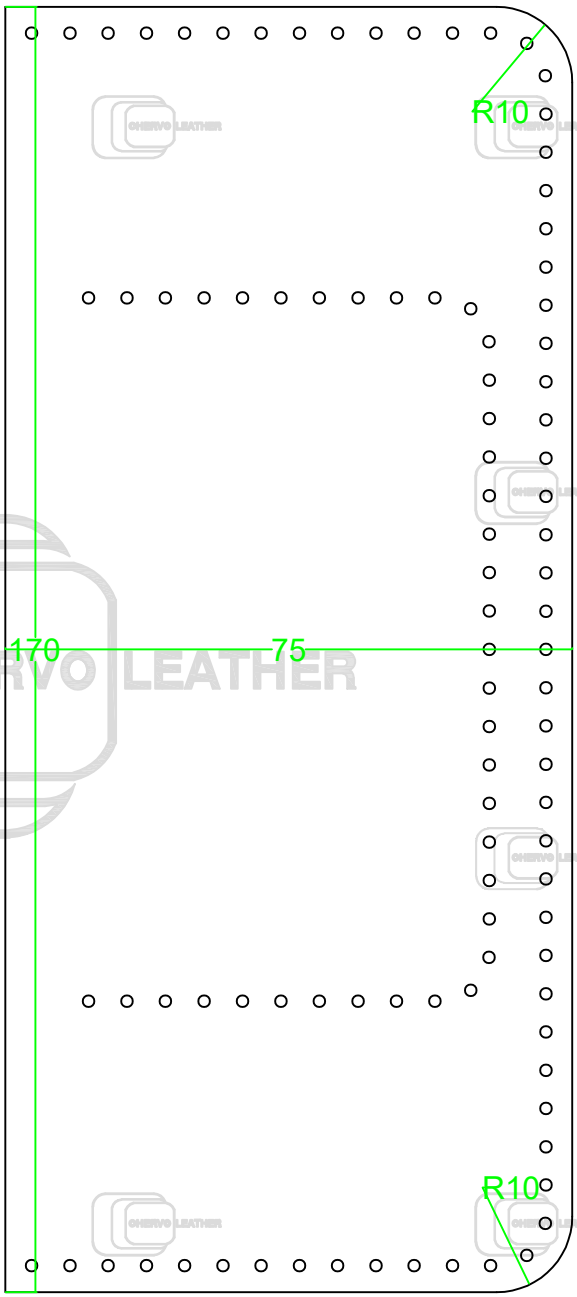

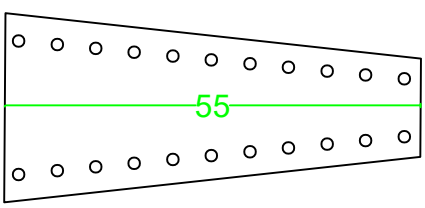

CHERVO LEATHER

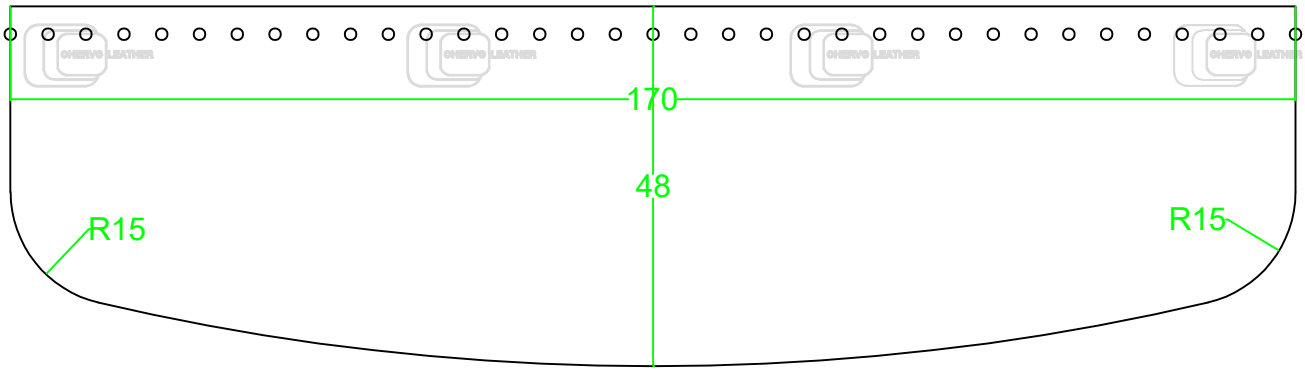
170
48
R15
R15

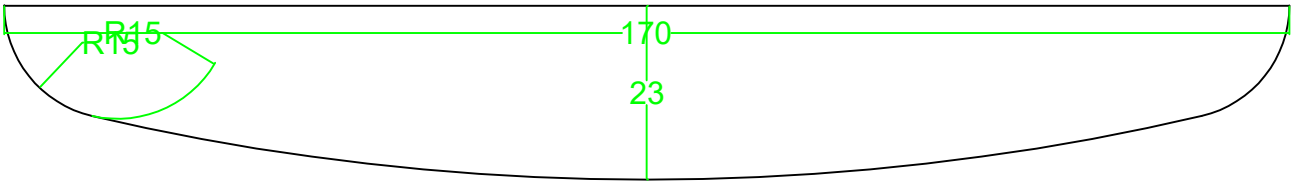
R15
R15
170
23

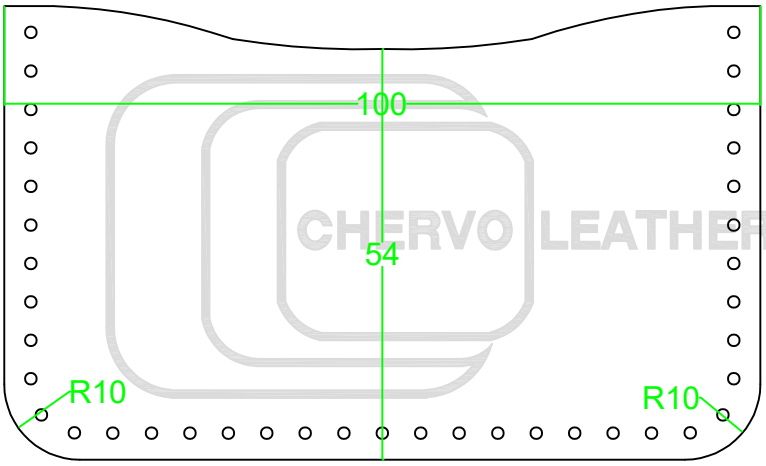
100
54
R10
R10

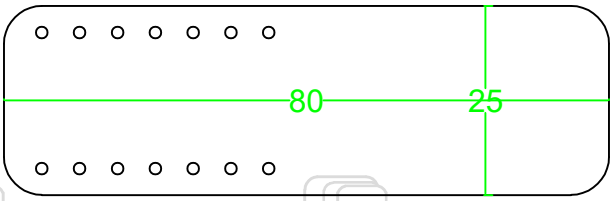
80
25

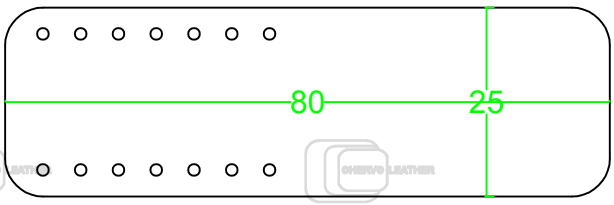
80
25